SpecialWheels
SPEED with SPIRIT and CARE
NUMBER ONE
WHEEL SUPPLIER
ESTABLISHED
1993

SpecialWheels



Vinterkatalog 2020


NITRO
WHEELS
www.nitrowheels.com

INNHOLD

Aluminiumsfelger	**4-202**
Slik måler du	**203**
Stålfelger	**204-214**
Speedline Truck	**216-217**
Accuride last, buss og henger	**218-219**
Prisliste aluminium	**220-224**
Felgprogram	**225-229**

Bilmerke - Bilmodell	Årsmodell	Dimensjon	Felgdim.	Bilde	Felgmodell	ET Felg	ET Bil	Avvik ET	Veil. Pris eks. MVA	Merknader	B,C D, M
ALFA ROMEO				PCD: **4-98** Bolt - Mutter: **12x1,25B** CB: **58,1**							
145	10.94-12.00	14-18	5,5x14	37	Image Comet	35	40	10	1264,-		D
146	05.95-12.00	14-18	5,5x14	38	Image Comet Slv	35	40	10	1264,-		D
155	04.92-03.95	15-18	6x15	19	ATS Streetrallye Slv	35	40	10	1960,-		D
155	04.95-09.97	15-18	6x15	34	CSP 16	40	40	0	1228,-	**OE-fit**	B,D
164 2.0TS	01.88-09.98	14-19	6x15	37	Image Comet	40	40	0	1316,-		D
			6x15	38	Image Comet Slv	40	40	0	1316,-		D
			6x16	37	Image Comet	40	40	0	1536,-		D
			6x16	38	Image Comet Slv	40	40	0	1536,-		D
ALFA ROMEO				PCD: **4-98** Bolt - Mutter: **12x1,25B** CB: **58,1**							
MiTo (955)	07.08-	16-19	6,5x16	19	ATS Streetrallye Slv	35	39	8	2240,-		D
(Ikke Brembo bremser)											
ALFA ROMEO				PCD: **5-98** Bolt - Mutter: **12x1,25B** CB: **58,1**							
147	01.01-03.10	15-19	6x15	48	Image Motion	38	40	4	1224,-	**OE-fit**	B,D
156	10.97-05.05	15-19									
156 sportwagon	10.97-05.05	15-19									
164 3.0 V6	03.93-09.98	15-19									
ALFA ROMEO				PCD: **5-110** Bolt - Mutter: **12x1,25B** CB: **65,1**							
Giulietta (940)	04.10-	16-20	6,5x16	36	Image Colt	40	41	2	1624,-		D
			6,5x16	92	Image Colt L.Gun	40	41	2	1548,-		D
			7x16	17	BM Drive M.Gun	40	41	2	1476,-	Eksenterbolter	D
			7,5x17	36	Image Colt	40	41	2	1956,-	**OE-fit**	B,D
			7,5x17	92	Image Colt L.Gun	40	41	2	1876,-		D
			8x17	48	Image Motion	34	41	14	1736,-		D
			8x18	36	Image Colt	40	41	2	2412,-		D
			8x18	48	Image Motion	34	41	14	2204,-		D
			8x18	92	Image Colt L.Gun	40	41	2	2296,-		D
ALFA ROMEO				PCD: **5-110** Bolt - Mutter: **12x1,25B** CB: **65,1**							
Giulietta (940) Brembo bremser	04.10-	17-20	8x17	48	Image Motion	34	41	14	1736,-		D
1750TBi & 2.0JTDM			8x18	48	Image Motion	34	41	14	2204,-		D
(røde bremseok)											
ALFA ROMEO				PCD: **5-110** Bolt - Mutter: **14x1,50B** CB: **65,1**							
Giulia (952)	01.16-	16-20	8x17	48	Image Motion	34	33	-2	1736,-	**OE-fit**	B,D
2.2JTD (154kW) 18"			8x18	48	Image Motion	34	33	-2	2204,-	**OE-fit**	B,D
2.0 Turbo (147kW & 206kW) 18"											
ALFA ROMEO				PCD: **5-110** Bolt - Mutter: **14x1,50B** CB: **65,1**							
159 (939)	09.05-12.12	16-20	8x17	48	Image Motion	34	41	14	1736,-		D
(Kun biler med 16" orig.			8x18	48	Image Motion	34	41	14	2204,-		D
kan ha 16", andre 17")											
Brera (939)	01.06-	17-20									
Spider (939)	08.06-	17-20									
ALFA ROMEO				PCD: **5-110** Bolt - Mutter: **14x1,50B** CB: **65,1**							
Stelvio (949)	01.17-	17-22	8x17	48	Image Motion	34	34	0	1736,-	**OE-fit**	B,D
			8x18	48	Image Motion	34	34	0	2204,-	**OE-fit**	B,D
ASTON MARTIN				PCD: **4-100** Bolt - Mutter: **12x1,50** CB: **54,1**							
Cygnet	01.11-09.13	16-18	6,5x16	34	CSP 16	40	45	10	1468,-		
			6,5x16	42	Image Brio	38	45	14	1524,-		
			7x17	42	Image Brio	40	45	10	1832,-		
AUDI				PCD: **4-100** Bolt - Mutter: **12x1,50B** CB: **57,1**							
A2 (8Z) 1.2TDI	02.01-08.05	14-14	5x14	37	Image Comet	35	45	20	1264,-		D
			5,5x14	37	Image Comet	30	45	30	1264,-		D
			5,5x14	38	Image Comet Slv	30	45	30	1264,-		D
			5,5x14	45	Image Ride HL	30	45	30	1716,-		D
AUDI				PCD: **5-100** Bolt - Mutter: **14x1,50B** CB: **57,1**							
A2 (8Z) 1.4i 1.4TDI 1.6FSI	06.00-08.05	15-17	6x15	17	BM Drive M.Gun	38	38	0	1276,-		D
A3 (8L)	09.96-04.03	15-19	6x15	20	ATS Antares	38	38	0	1496,-	**OE-fit**	B,D
S3 (8L)	03.99-04.03	16-19	6x15	21	ATS Antares G.Blk	38	38	0	1568,-	**OE-fit**	B,D
TT (8N) cab 1.8T	08.99-01.07	16-19	6x15	29	CSP 13	38	38	0	1468,-	**OE-fit**	B,D
TT (8N) cab 3.2	03.03-01.07	17-19	6x15	30	CSP 13 M.Gun	38	38	0	1468,-	**OE-fit**	B,D
TT (8N) coupe 1.8T	10.98-08.06	16-19	6x15	45	Image Ride	38	38	0	1552,-	**OE-fit**	B,D
TT (8N) coupe 3.2	03.03-08.06	17-19	6x15	48	Image Motion	38	38	0	1224,-	**OE-fit**	B,D
			6x15	49	Image Motion G.Gun	38	38	0	1224,-	**OE-fit**	B,D
			6,5x16	29	CSP 13	35	38	6	1716,-	**OE-fit**	B,D
			6,5x16	30	CSP 13 M.Gun	35	38	6	1716,-	**OE-fit**	B,D
			6,5x16	36	Image Colt	40	38	-4	1624,-		
			6,5x16	48	Image Motion	38	38	0	1468,-	**OE-fit**	B,D
			6,5x16	49	Image Motion G.Gun	38	38	0	1468,-	**OE-fit**	B,D
			6,5x16	92	Image Colt L.Gun	40	38	-4	1548,-		
			7x17	29	CSP 13	35	38	6	2152,-	**OE-fit**	B,D
			7x17	30	CSP 13 M.Gun	35	38	6	2152,-	**OE-fit**	B,D
AUDI				PCD: **5-100** Bolt - Mutter: **14x1,50B** CB: **57,1**							
A1 (8X)	06.10-09.18	15-18	6x15	17	BM Drive M.Gun	38	34	-8	1276,-		D
1.4TFSI (136kW) 16"			6x15	20	ATS Antares	38	34	-8	1496,-	**OE-fit**	B,D
A1 (8X) sportback	03.12-09.18	15-18	6x15	21	ATS Antares G.Blk	38	34	-8	1568,-	**OE-fit**	B,D
S1 (8X)	06.14-	16-19	6x15	29	CSP 13	38	34	-8	1468,-	**OE-fit**	B,D
S1 (8X) sportback	06.14-	16-19	6x15	30	CSP 13 M.Gun	38	34	-8	1468,-	**OE-fit**	B,D
			6x15	45	Image Ride	38	34	-8	1552,-	**OE-fit**	B,D
			6x15	48	Image Motion	38	34	-8	1224,-	**OE-fit**	B,D
			6x15	49	Image Motion G.Gun	38	34	-8	1224,-	**OE-fit**	B,D
			6,5x16	29	CSP 13	35	34	-2	1716,-	**OE-fit**	B,D
			6,5x16	30	CSP 13 M.Gun	35	34	-2	1716,-	**OE-fit**	B,D
			6,5x16	36	Image Colt	40	34	-12	1624,-		
			6,5x16	48	Image Motion	38	34	-8	1468,-	**OE-fit**	B,D
			6,5x16	49	Image Motion G.Gun	38	34	-8	1468,-	**OE-fit**	B,D
			6,5x16	92	Image Colt L.Gun	40	34	-12	1548,-		

Forts. neste side »

Bilmerke - Bilmodell	Årsmodell	Dimensjon	Felgdim.	Bilde	Felgmodell	ET Felg	ET Bil	Avvik ET	Veil. Pris eks. MVA	Merknader	B,C D, M
AUDI (forts.)			PCD: **5-100** Bolt - Mutter: **14x1,50B** CB: **57,1**								
			7x17	29	CSP 13	35	34	-2	2152,-	**OE-fit**	B,D
			7x17	30	CSP 13 M.Gun	35	34	-2	2152,-	**OE-fit**	B,D
			7,5x17	16	Advanti Inizio DST	42	34	-16	3324,-	**OE-fit**	B,D
			7,5x17	36	Image Colt	43	34	-18	1956,-		
			7,5x17	92	Image Colt L.Gun	43	34	-18	1876,-		
			8x18	16	Advanti Inizio DST	42	34	-16	3828,-	**OE-fit**	B,D,M
AUDI			PCD: **5-100** Bolt - Mutter: **14x1,50B** CB: **57,1**								
A1 (GB)	10.18-	15-19	6x15	17	BM Drive M.Gun	38	40	4	1276,-	**OE-fit**	B,D
40 TFSI (147kW) 16"			6x15	20	ATS Antares	38	40	4	1496,-	**OE-fit**	B,D
A1 (GB) citycarver	10.19-	16-19	6x15	21	ATS Antares G.Blk	38	40	4	1568,-	**OE-fit**	B,D
			6x15	29	CSP 13	38	40	4	1468,-	**OE-fit**	B,D
			6x15	30	CSP 13 M.Gun	38	40	4	1468,-	**OE-fit**	B,D
			6x15	45	Image Ride	38	40	4	1552,-	**OE-fit**	B,D
			6x15	48	Image Motion	38	40	4	1224,-	**OE-fit**	B,D
			6x15	49	Image Motion G.Gun	38	40	4	1224,-	**OE-fit**	B,D
			6,5x16	29	CSP 13	45	40	-10	1716,-	**OE-fit**	B,D
			6,5x16	30	CSP 13 M.Gun	45	40	-10	1716,-	**OE-fit**	B,D
			6,5x16	36	Image Colt	40	40	0	1624,-		
			6,5x16	46	Image Stella	43	40	-6	1548,-	**OE-fit**	B,D
			6,5x16	47	Image Stella M.Blk	43	40	-6	1548,-	**OE-fit**	B,D
			6,5x16	48	Image Motion	38	40	4	1468,-	**OE-fit**	B,D
			6,5x16	49	Image Motion G.Gun	38	40	4	1468,-	**OE-fit**	B,D
			6,5x16	92	Image Colt L.Gun	40	40	0	1548,-		
			7x17	29	CSP 13	47	40	-14	2152,-	**OE-fit**	B,D
			7x17	30	CSP 13 M.Gun	47	40	-14	2152,-	**OE-fit**	B,D
			7x17	46	Image Stella	47	40	-14	1812,-	**OE-fit**	B,D
			7x17	47	Image Stella M.Blk	47	40	-14	1812,-	**OE-fit**	B,D
			7,5x17	16	Advanti Inizio DST	42	40	-4	3324,-	**OE-fit**	B,D
			7,5x17	36	Image Colt	43	40	-6	1956,-		
			7,5x17	92	Image Colt L.Gun	43	40	-6	1876,-		
			8x18	16	Advanti Inizio DST	42	40	-4	3828,-	**OE-fit**	B,D,M
			8x19	16	Advanti Inizio DST	42	40	-4	4412,-	**OE-fit**	B,D,M
AUDI			PCD: **5-112** Bolt - Mutter: **14x1,50B** CB: **57,1**								
A1 Quattro	01.12-03.12	18-19	8x18	9	Nitro Sabre G.Blk	45	50	10	3496,-		B,C
Limited edition			8x18	17	BM Drive M.Gun	45	50	10	2296,-		
			8x18	50	Image Legend	45	50	10	2276,-	**OE-fit**	B,D
AUDI			PCD: **5-112** Bolt - Mutter: **14x1,50B** CB: **57,1**								
A3 (8P)	05.03-07.12	15-20	6x15	17	BM Drive M.Gun	43	50	14	1276,-		D
Kun 1.6TDI (77kW) fr.o.m.			6x15	29	CSP 13	43	50	14	1468,-	**OE-fit**	B,C,D
07.10- kan ha 15"			6x15	30	CSP 13 M.Gun	43	50	14	1468,-	**OE-fit**	B,C,D
A3 (8P) cab	01.08-11.13	16-20	6x15	45	Image Ride	43	50	14	1552,-	**OE-fit**	B,D
A3 (8P) sportback	09.04-07.12	16-20	6x15	48	Image Motion	43	50	14	1224,-	**OE-fit**	B,D
Kun 1.6TDI (77kW) fr.om.			6x15	49	Image Motion G.Gun	43	50	14	1224,-	**OE-fit**	B,D
07.10- kan ha 15"			6,5x16	20	ATS Antares	46	50	8	1852,-	**OE-fit**	B,C,D
A3 (8V)	08.12-	16-20	6,5x16	21	ATS Antares G.Blk	46	50	8	1896,-	**OE-fit**	B,C,D
A3 (8V) cab	01.13-	16-20	6,5x16	26	CSP 18 G.Blk/pol	46	50	8	1896,-		
A3 (8V) sedan	06.13-	16-20	6,5x16	27	CSP 18	46	50	8	1760,-		
A3 (8V) sportback	01.13-	16-20	6,5x16	28	CSP 18 G.Blk	46	50	8	1760,-		
S3 (8P)	10.06-08.12	17-20	6,5x16	29	CSP 13	46	50	8	1716,-	**OE-fit**	B,C,D
TT (8J) cab	02.07-10.14	16-20	6,5x16	30	CSP 13 M.Gun	46	50	8	1716,-	**OE-fit**	B,C,D
TTS (200kW), 3.2 17"			6,5x16	36	Image Colt	45	50	10	1624,-		B
TT (8J) coupe 2.0T	09.06-09.14	16-20	6,5x16	40	Image Spirit	46	50	8	1264,-	**OE-fit**	B,D
TTS (200kW), 3.2 17"			6,5x16	46	Image Stella	46	50	8	1548,-	**OE-fit**	B,D
			6,5x16	47	Image Stella M.Blk	46	50	8	1548,-	**OE-fit**	B,D
			6,5x16	48	Image Motion	46	50	8	1468,-	**OE-fit**	B,D
			6,5x16	49	Image Motion G.Gun	46	50	8	1468,-	**OE-fit**	B,D
			6,5x16	50	Image Legend	46	50	8	1544,-	**OE-fit**	B,D
			6,5x16	92	Image Colt L.Gun	45	50	10	1548,-		B
			7x16	17	BM Drive M.Gun	45	50	10	1476,-		D
			7x16	20	ATS Antares	48	50	4	1852,-	**OE-fit**	B,C,D
			7x16	21	ATS Antares G.Blk	48	50	4	1896,-	**OE-fit**	B,C,D
			7x16	50	Image Legend	45	50	10	1544,-		B
			7,5x16	20	ATS Antares	45	50	10	1852,-		B,C
			7,5x16	21	ATS Antares G.Blk	45	50	10	1896,-		B,C
			7x17	17	BM Drive M.Gun	45	50	10	1736,-		D
			7x17	20	ATS Antares	49	50	2	2264,-	**OE-fit**	B,D
			7x17	21	ATS Antares G.Blk	49	50	2	2380,-	**OE-fit**	B,D
			7x17	29	CSP 13	48	50	4	2152,-	**OE-fit**	B,C,D
			7x17	30	CSP 13 M.Gun	48	50	4	2152,-	**OE-fit**	B,C,D
			7x17	40	Image Spirit	46	50	8	1476,-	**OE-fit**	B,D
			7x17	46	Image Stella	46	50	8	1812,-	**OE-fit**	B,D
			7x17	47	Image Stella M.Blk	46	50	8	1812,-	**OE-fit**	B,D
			7x17	48	Image Motion	45	50	10	1736,-	**OE-fit**	B,D
			7x17	49	Image Motion G.Gun	45	50	10	1736,-	**OE-fit**	B,D
			7,5x17	9	Nitro Sabre G.Blk	45	50	10	3052,-		B,C
			7,5x17	16	Advanti Inizio DST	42	50	16	3324,-		B
			7,5x17	20	ATS Antares	45	50	10	2264,-		B,C
			7,5x17	21	ATS Antares G.Blk	45	50	10	2380,-		B,C
			7,5x17	26	CSP 18 G.Blk/pol	52	50	-4	2272,-		
			7,5x17	27	CSP 18	52	50	-4	2200,-		
			7,5x17	28	CSP 18 G.Blk	52	50	-4	2200,-		
			7,5x17	36	Image Colt	45	50	10	1956,-		B
			7,5x17	50	Image Legend	45	50	10	1812,-	**OE-fit**	B,D
			7,5x17	92	Image Colt L.Gun	45	50	10	1876,-		B
			8x17	17	BM Drive M.Gun	45	50	10	1736,-		

Forts. neste side »

Bilmerke - Bilmodell	Årsmodell	Dimensjon	Felgdim.	Bilde	Felgmodell	ET Felg	ET Bil	Avvik ET	Veil. Pris eks. MVA	Merknader	B,C D, M
AUDI (forts.)				PCD: **5-112** Bolt - Mutter: **14x1,50B**		CB: **57,1**					
			8x17	48	Image Motion	45	50	10	1736,-		B
			7x18	22	ATS Evolution	45	50	10	3016,-		D
			7x18	23	ATS Evolution G.Grey	45	50	10	3116,-		D
			7,5x18	2	Nitro Sapphire FF	48	50	4	3944,-		B,C
			7,5x18	29	CSP 13	51	50	-2	2932,-	**OE-fit**	B,C,D
			7,5x18	30	CSP 13 M.Gun	51	50	-2	2932,-	**OE-fit**	B,C,D
			7,5x18	46	Image Stella	48	50	4	2276,-	**OE-fit**	B,D
			7,5x18	47	Image Stella M.Blk	48	50	4	2276,-	**OE-fit**	B,D
			8x18	7	Nitro Spark G.Blk/Grey	45	50	10	3476,-		B
			8x18	8	Nitro Spark G.Blk/Red	45	50	10	3476,-		B
			8x18	9	Nitro Sabre G.Blk	45	50	10	3496,-		B,C
			8x18	10	Nitro Demon H.Slv	47	50	6	2972,-		B,C
			8x18	11	Nitro Demon	47	50	6	2784,-		B,C
			8x18	16	Advanti Inizio DST	45	50	10	3828,-		B
			8x18	17	BM Drive M.Gun	45	50	10	2296,-		
			8x18	20	ATS Antares	47	50	6	3056,-		B,C
			8x18	21	ATS Antares G.Blk	47	50	6	3136,-		B,C
			8x18	26	CSP 18 G.Blk/pol	47	50	6	2956,-		
			8x18	27	CSP 18	47	50	6	2972,-		
			8x18	28	CSP 18 G.Blk	47	50	6	2972,-		
			8x18	29	CSP 13	48	50	4	2932,-	**OE-fit**	B,C,D
			8x18	30	CSP 13 M.Gun	48	50	4	2932,-	**OE-fit**	B,C,D
			8x18	36	Image Colt	45	50	10	2412,-		B
			8x18	48	Image Motion	44	50	12	2204,-	**OE-fit**	B,D
			8x18	49	Image Motion G.Gun	44	50	12	2204,-	**OE-fit**	B,D
			8x18	50	Image Legend	45	50	10	2276,-	**OE-fit**	B,D
			8x18	92	Image Colt L.Gun	45	50	10	2296,-		B
			7,5x19	2	Nitro Sapphire FF	48	50	4	4572,-		B,C
			8x19	4	Nitro Turismo FF G.Gun/Pol	47	50	6	4644,-		
			8x19	10	Nitro Demon H.Slv	47	50	6	3624,-		B,C
			8x19	11	Nitro Demon	47	50	6	3376,-		B,C
			8x19	16	Advanti Inizio DST	45	50	10	4412,-		B
			8x19	26	CSP 18 G.Blk/pol	47	50	6	3596,-		
			8x19	27	CSP 18	47	50	6	3444,-		
			8x19	28	CSP 18 G.Blk	47	50	6	3444,-		
			8x19	29	CSP 13	48	50	4	3404,-	**OE-fit**	B,C,D
			8x19	30	CSP 13 M.Gun	48	50	4	3404,-	**OE-fit**	B,C,D
			8x19	48	Image Motion	44	50	12	2532,-	**OE-fit**	B,D
			8x19	49	Image Motion G.Gun	44	50	12	2532,-	**OE-fit**	B,D
			8,5x19	3	Nitro Turismo FF	43	50	14	4492,-		D
			8,5x19	4	Nitro Turismo FF G.Gun/Pol	43	50	14	4644,-		D
			8,5x19	5	Nitro Volcano G.Gun	45	50	10	4388,-		B,C
			8,5x19	6	Nitro Volcano	45	50	10	4632,-		B,C
			8,5x19	9	Nitro Sabre G.Blk	45	50	10	4292,-		B,C
			8,5x19	36	Image Colt	45	50	10	3028,-		B,M
			8,5x19	92	Image Colt L.Gun	45	50	10	2876,-		B,M
			8x20	2	Nitro Sapphire FF	48	50	4	5096,-		B,C
			8x20	4	Nitro Turismo FF G.Gun/Pol	47	50	6	4964,-		
			8,5x20	3	Nitro Turismo FF	43	50	14	4812,-		
			8,5x20	5	Nitro Volcano G.Gun	45	50	10	4824,-		B,C
			8,5x20	6	Nitro Volcano	45	50	10	5164,-		B,C
			8,5x20	7	Nitro Spark G.Blk/Grey	45	50	10	4660,-		B
			8,5x20	8	Nitro Spark G.Blk/Red	45	50	10	4660,-		B,M
			8,5x20	9	Nitro Sabre G.Blk	45	50	10	4800,-		B,C
			8,5x20	10	Nitro Demon H.Slv	45	50	10	4104,-		B,C,M
			8,5x20	11	Nitro Demon	45	50	10	3808,-		B,C,M
			8,5x20	36	Image Colt	45	50	10	3432,-		B,M
			8,5x20	92	Image Colt L.Gun	45	50	10	3276,-		B,M
AUDI				PCD: **5-112** Bolt - Mutter: **14x1,50B**		CB: **57,1**					
A3 (GY) sportback	03.20-	16-20	6,5x16	20	ATS Antares	46	46	0	1852,-	**OE-fit**	B,D
			6,5x16	21	ATS Antares G.Blk	46	46	0	1896,-	**OE-fit**	B,D
			6,5x16	26	CSP 18 G.Blk/pol	46	46	0	1896,-		
			6,5x16	27	CSP 18	46	46	0	1760,-		
			6,5x16	28	CSP 18 G.Blk	46	46	0	1760,-		
			6,5x16	29	CSP 13	46	46	0	1716,-	**OE-fit**	B,D
			6,5x16	30	CSP 13 M.Gun	46	46	0	1716,-	**OE-fit**	B,D
			6,5x16	36	Image Colt	45	46	2	1624,-		B
			6,5x16	40	Image Spirit	46	46	0	1264,-	**OE-fit**	B,D
			6,5x16	46	Image Stella	46	46	0	1548,-	**OE-fit**	B,D
			6,5x16	47	Image Stella M.Blk	46	46	0	1548,-	**OE-fit**	B,D
			6,5x16	48	Image Motion	46	46	0	1468,-	**OE-fit**	B,D
			6,5x16	49	Image Motion G.Gun	46	46	0	1468,-	**OE-fit**	B,D
			6,5x16	50	Image Legend	46	46	0	1544,-	**OE-fit**	B,D
			6,5x16	92	Image Colt L.Gun	45	46	2	1548,-		B
			7x16	17	BM Drive M.Gun	45	46	2	1476,-	**OE-fit**	B,D
			7x17	17	BM Drive M.Gun	45	46	2	1736,-	**OE-fit**	B,D
			7x17	29	CSP 13	48	46	-4	2152,-	**OE-fit**	B,D
			7x17	30	CSP 13 M.Gun	48	46	-4	2152,-	**OE-fit**	B,D
			7x17	40	Image Spirit	46	46	0	1476,-	**OE-fit**	B,D
			7x17	46	Image Stella	46	46	0	1812,-	**OE-fit**	B,D
			7x17	47	Image Stella M.Blk	46	46	0	1812,-	**OE-fit**	B,D
			7x17	48	Image Motion	45	46	2	1736,-	**OE-fit**	B,D
			7x17	49	Image Motion G.Gun	45	46	2	1736,-	**OE-fit**	B,D
			7,5x17	9	Nitro Sabre G.Blk	45	46	2	3052,-		B
			7,5x17	16	Advanti Inizio DST	42	46	8	3324,-		B
			7,5x17	20	ATS Antares	45	46	2	2264,-		B

Forts. neste side »

Bilmerke - Bilmodell	Årsmodell	Dimensjon	Felgdim.	Bilde	Felgmodell	ET Felg	ET Bil	Avvik ET	Veil. Pris eks. MVA	Merknader	B,C D, M
AUDI (forts.)			PCD: **5-112** Bolt - Mutter: **14x1,50B**			CB: **57,1**					
			7,5x17	21	ATS Antares G.Blk	45	46	2	2380,-		B
			7,5x17	36	Image Colt	45	46	2	1956,-		B
			7,5x17	50	Image Legend	45	46	2	1812,-	**OE-fit**	B,D
			7,5x17	92	Image Colt L.Gun	45	46	2	1876,-		B
			8x17	17	BM Drive M.Gun	45	46	2	1736,-		B
			7,5x18	2	Nitro Sapphire FF	48	46	-4	3944,-		B,C
			7,5x18	46	Image Stella	48	46	-4	2276,-	**OE-fit**	B,D
			7,5x18	47	Image Stella M.Blk	48	46	-4	2276,-	**OE-fit**	B,D
			8x18	7	Nitro Spark G.Blk/Grey	45	46	2	3476,-		B
			8x18	8	Nitro Spark G.Blk/Red	45	46	2	3476,-		B
			8x18	9	Nitro Sabre G.Blk	45	46	2	3496,-		B
			8x18	16	Advanti Inizio DST	45	46	2	3828,-		B
			8x18	17	BM Drive M.Gun	45	46	2	2296,-		B
			8x18	26	CSP 18 G.Blk/pol	47	46	-2	2956,-		
			8x18	27	CSP 18	47	46	-2	2972,-		
			8x18	28	CSP 18 G.Blk	47	46	-2	2972,-		
			8x18	29	CSP 13	48	46	-4	2932,-	**OE-fit**	B,D
			8x18	30	CSP 13 M.Gun	48	46	-4	2932,-	**OE-fit**	B,D
			8x18	36	Image Colt	45	46	2	2412,-		B
			8x18	48	Image Motion	44	46	4	2204,-	**OE-fit**	B,D
			8x18	49	Image Motion G.Gun	44	46	4	2204,-	**OE-fit**	B,D
			8x18	50	Image Legend	45	46	2	2276,-	**OE-fit**	B,D
			8x18	92	Image Colt L.Gun	45	46	2	2296,-		B
			7,5x19	2	Nitro Sapphire FF	48	46	-4	4572,-		B,C
			8x19	4	Nitro Turismo FF G.Gun/Pol	47	46	-2	4644,-		
			8x19	16	Advanti Inizio DST	45	46	2	4412,-		B
			8x19	26	CSP 18 G.Blk/pol	47	46	-2	3596,-		
			8x19	27	CSP 18	47	46	-2	3444,-		
			8x19	28	CSP 18 G.Blk	47	46	-2	3444,-		
			8x19	29	CSP 13	48	46	-4	3404,-	**OE-fit**	B,D
			8x19	30	CSP 13 M.Gun	48	46	-4	3404,-	**OE-fit**	B,D
			8x19	48	Image Motion	44	46	4	2532,-	**OE-fit**	B,D
			8x19	49	Image Motion G.Gun	44	46	4	2532,-	**OE-fit**	B,D
			8,5x19	3	Nitro Turismo FF	43	46	6	4492,-	**OE-fit**	B,D
			8,5x19	4	Nitro Turismo FF G.Gun/Pol	43	46	6	4644,-	**OE-fit**	B,D
			8,5x19	5	Nitro Volcano G.Gun	45	46	2	4388,-		B
			8,5x19	6	Nitro Volcano	45	46	2	4632,-		B
			8,5x19	9	Nitro Sabre G.Blk	45	46	2	4292,-		B
			8,5x19	36	Image Colt	45	46	2	3028,-		B
			8,5x19	92	Image Colt L.Gun	45	46	2	2876,-		B
			8x20	2	Nitro Sapphire FF	48	46	-4	5096,-		B,C
			8x20	4	Nitro Turismo FF G.Gun/Pol	47	46	-2	4964,-		
			8,5x20	3	Nitro Turismo FF	43	46	6	4812,-		
			8,5x20	4	Nitro Turismo FF G.Gun/Pol	43	46	6	4964,-		
			8,5x20	5	Nitro Volcano G.Gun	45	46	2	4824,-		B
			8,5x20	6	Nitro Volcano	45	46	2	5164,-		B
			8,5x20	7	Nitro Spark G.Blk/Grey	45	46	2	4660,-		B
			8,5x20	8	Nitro Spark G.Blk/Red	45	46	2	4660,-		B
			8,5x20	9	Nitro Sabre G.Blk	45	46	2	4800,-		B
			8,5x20	92	Image Colt L.Gun	45	46	2	3276,-		B
AUDI			PCD: **5-112** Bolt - Mutter: **14x1,50B**			CB: **57,1**					
S3 (8V)	09.12-	17-20	7x17	46	Image Stella	46	50	8	1812,-	**OE-fit**	B,D
S3 (8V) sedan	03.14-	17-20	7x17	47	Image Stella M.Blk	46	50	8	1812,-	**OE-fit**	B,D
			7,5x17	9	Nitro Sabre G.Blk	45	50	10	3052,-		B,C
			7,5x17	16	Advanti Inizio DST	42	50	16	3324,-		B
			7,5x17	20	ATS Antares	45	50	10	2264,-		B,C
			7,5x17	21	ATS Antares G.Blk	45	50	10	2380,-		B,C
			7,5x17	50	Image Legend	45	50	10	1812,-	**OE-fit**	B,D
			8x17	17	BM Drive M.Gun	45	50	10	1736,-		
			8x17	48	Image Motion	45	50	10	1736,-		B
			7,5x18	2	Nitro Sapphire FF	48	50	4	3944,-		B,C
			7,5x18	46	Image Stella	48	50	4	2276,-	**OE-fit**	B,D
			7,5x18	47	Image Stella M.Blk	48	50	4	2276,-	**OE-fit**	B,D
			8x18	9	Nitro Sabre G.Blk	45	50	10	3496,-		B,C
			8x18	10	Nitro Demon H.Slv	47	50	6	2972,-		B,C
			8x18	11	Nitro Demon	47	50	6	2784,-		B,C
			8x18	16	Advanti Inizio DST	45	50	10	3828,-		B
			8x18	17	BM Drive M.Gun	45	50	10	2296,-		
			8x18	20	ATS Antares	47	50	6	3056,-		B,C
			8x18	21	ATS Antares G.Blk	47	50	6	3136,-		B,C
			8x18	29	CSP 13	48	50	4	2932,-	**OE-fit**	B,C,D
			8x18	30	CSP 13 M.Gun	48	50	4	2932,-	**OE-fit**	B,C,D
			8x18	48	Image Motion	44	50	12	2204,-	**OE-fit**	B,D
			8x18	49	Image Motion G.Gun	44	50	12	2204,-	**OE-fit**	B,D
			8x18	50	Image Legend	45	50	10	2276,-	**OE-fit**	B,D
			7,5x19	2	Nitro Sapphire FF	48	50	4	4572,-		B,C
			8x19	10	Nitro Demon H.Slv	47	50	6	3624,-		B,C
			8x19	11	Nitro Demon	47	50	6	3376,-		B,C
			8x19	16	Advanti Inizio DST	45	50	10	4412,-		B
			8x19	29	CSP 13	48	50	4	3404,-	**OE-fit**	B,C,D
			8x19	30	CSP 13 M.Gun	48	50	4	3404,-	**OE-fit**	B,C,D
			8x19	48	Image Motion	44	50	12	2532,-	**OE-fit**	B,D
			8x19	49	Image Motion G.Gun	44	50	12	2532,-	**OE-fit**	B,D
			8,5x19	3	Nitro Turismo FF	43	50	14	4492,-		D
			8,5x19	4	Nitro Turismo FF G.Gun/Pol	43	50	14	4644,-		D
			8,5x19	5	Nitro Volcano G.Gun	45	50	10	4388,-		B,C

Forts. neste side »

Bilmerke - Bilmodell	Årsmodell	Dimensjon	Felgdim.	Bilde	Felgmodell	ET Felg	ET Bil	Avvik ET	Veil. Pris eks. MVA	Merknader	B,C D, M
AUDI (forts.)				PCD: **5-112** Bolt - Mutter: **14x1,50B**		CB: **57,1**					
			8,5x19	6	Nitro Volcano	45	50	10	4632,-		B,C
			8,5x19	9	Nitro Sabre G.Blk	45	50	10	4292,-		B,C
			8x20	2	Nitro Sapphire FF	48	50	4	5096,-		B,C
			8,5x20	3	Nitro Turismo FF	43	50	14	4812,-		
			8,5x20	4	Nitro Turismo FF G.Gun/Pol	43	50	14	4964,-		
			8,5x20	9	Nitro Sabre G.Blk	45	50	10	4800,-		B,C
			8,5x20	10	Nitro Demon H.Slv	45	50	10	4104,-		B,C
			8,5x20	11	Nitro Demon	45	50	10	3808,-		B,C
AUDI				PCD: **5-112** Bolt - Mutter: **14x1,50B**		CB: **57,1**					
RS3 (8P)	03.11-07.15	18-20	8x18	9	Nitro Sabre G.Blk	45	50	10	3496,-		B,C
			8x18	17	BM Drive M.Gun	45	50	10	2296,-		
			8x18	29	CSP 13	44	50	12	2932,-	**OE-fit**	B,C,D
			8x18	30	CSP 13 M.Gun	44	50	12	2932,-	**OE-fit**	B,C,D
			8x18	48	Image Motion	44	50	12	2204,-	**OE-fit**	B,D
			8x18	49	Image Motion G.Gun	44	50	12	2204,-	**OE-fit**	B,D
			8x18	50	Image Legend	45	50	10	2276,-	**OE-fit**	B,D
			8x19	29	CSP 13	44	50	12	3404,-	**OE-fit**	B,C,D
			8x19	30	CSP 13 M.Gun	44	50	12	3404,-	**OE-fit**	B,C,D
			8x19	48	Image Motion	44	50	12	2532,-	**OE-fit**	B,D
			8x19	49	Image Motion G.Gun	44	50	12	2532,-	**OE-fit**	B,D
			8,5x19	3	Nitro Turismo FF	43	50	14	4492,-		D
			8,5x19	4	Nitro Turismo FF G.Gun/Pol	43	50	14	4644,-		D
			8,5x19	9	Nitro Sabre G.Blk	45	50	10	4292,-		B,C
			8,5x20	3	Nitro Turismo FF	43	50	14	4812,-		
			8,5x20	4	Nitro Turismo FF G.Gun/Pol	43	50	14	4964,-		
			8,5x20	9	Nitro Sabre G.Blk	45	50	10	4800,-		B,C
AUDI				PCD: **5-112** Bolt - Mutter: **14x1,50B**		CB: **57,1**					
RS3 (8V)	08.15-	18-20	8,5x19	3	Nitro Turismo FF	43	49	12	4492,-		D
RS3 (294kW) 19"			8,5x19	4	Nitro Turismo FF G.Gun/Pol	43	49	12	4644,-		D
			8,5x20	3	Nitro Turismo FF	43	49	12	4812,-		
			8,5x20	4	Nitro Turismo FF G.Gun/Pol	43	49	12	4964,-		
AUDI				PCD: **5-112** Bolt - Mutter: **14x1,50B**		CB: **57,1**					
RS3 (8V) sedan	08.17-	19-20	8x19	10	Nitro Demon H.Slv	35	42	14	3624,-		B
			8x19	11	Nitro Demon	35	42	14	3376,-		B
			8x19	29	CSP 13	40	42	4	3404,-	**OE-fit**	B,D
			8x19	30	CSP 13 M.Gun	40	42	4	3404,-	**OE-fit**	B,D
			8,5x19	3	Nitro Turismo FF	43	42	-2	4492,-		D
			8,5x19	4	Nitro Turismo FF G.Gun/Pol	43	42	-2	4644,-		D
			8,5x20	3	Nitro Turismo FF	43	42	-2	4812,-		
			8,5x20	4	Nitro Turismo FF G.Gun/Pol	43	42	-2	4964,-		
AUDI				PCD: **5-112** Bolt - Mutter: **14x1,50B**		CB: **57,1**					
TT RS (8J)	11.09-12.14	18-20	8x18	17	BM Drive M.Gun	45	52	14	2296,-		
			8,5x19	3	Nitro Turismo FF	43	52	18	4492,-		D
			8,5x19	4	Nitro Turismo FF G.Gun/Pol	43	52	18	4644,-		D
			9x19	3	Nitro Turismo FF	45	52	14	4660,-		
			9x19	4	Nitro Turismo FF G.Gun/Pol	45	52	14	4812,-		
			9x19	10	Nitro Demon H.Slv	45	52	14	3624,-		B,C
			9x19	11	Nitro Demon	45	52	14	3376,-		B,C
			8,5x20	3	Nitro Turismo FF	43	52	18	4812,-		
			8,5x20	4	Nitro Turismo FF G.Gun/Pol	43	52	18	4964,-		
			9x20	10	Nitro Demon H.Slv	48	52	8	4104,-		B,C
AUDI				PCD: **5-112** Bolt - Mutter: **14x1,50B**		CB: **57,1**					
TT RS (8J)	09.16-	19-21	8,5x19	3	Nitro Turismo FF	43	52	18	4492,-		D
			8,5x19	4	Nitro Turismo FF G.Gun/Pol	43	52	18	4644,-		D
			9x19	3	Nitro Turismo FF	45	52	14	4660,-		
			9x19	4	Nitro Turismo FF G.Gun/Pol	45	52	14	4812,-		
			8,5x20	3	Nitro Turismo FF	43	52	18	4812,-		
			8,5x20	4	Nitro Turismo FF G.Gun/Pol	43	52	18	4964,-		
			8,5x20	10	Nitro Demon H.Slv	45	52	14	4104,-		B,C
			8,5x20	11	Nitro Demon	45	52	14	3808,-		B,C
AUDI				PCD: **5-112** Bolt - Mutter: **14x1,50B**		CB: **57,1**					
TT (8J) cab	01.15-	17-20	7x17	17	BM Drive M.Gun	40	47	14	1736,-	**OE-fit**	B,D
TTS (228kW) 18"			7x17	20	ATS Antares	40	47	14	2264,-	**OE-fit**	B,C,D
TT (8J) coupe	10.14-	17-20	7x17	21	ATS Antares G.Blk	40	47	14	2380,-	**OE-fit**	B,C,D
TTS (228kW) 18"			7x17	29	CSP 13	40	47	14	2152,-	**OE-fit**	B,C,D
			7x17	30	CSP 13 M.Gun	40	47	14	2152,-	**OE-fit**	B,C,D
			7x17	46	Image Stella	46	47	2	1812,-	**OE-fit**	B,D
			7x17	47	Image Stella M.Blk	46	47	2	1812,-	**OE-fit**	B,D
			7x17	48	Image Motion	40	47	14	1736,-	**OE-fit**	B,D
			7x17	49	Image Motion G.Gun	40	47	14	1736,-	**OE-fit**	B,D
			7,5x17	9	Nitro Sabre G.Blk	45	47	4	3052,-		B,C
			7,5x17	16	Advanti Inizio DST	42	47	10	3324,-		B
			7,5x17	20	ATS Antares	45	47	4	2264,-		B,C
			7,5x17	21	ATS Antares G.Blk	45	47	4	2380,-		B,C
			7,5x17	50	Image Legend	45	47	4	1812,-	**OE-fit**	B,D
			8x17	17	BM Drive M.Gun	45	47	4	1736,-		
			8x17	48	Image Motion	45	47	4	1736,-		B
			7,5x18	46	Image Stella	48	47	-2	2276,-	**OE-fit**	B,D
			7,5x18	47	Image Stella M.Blk	48	47	-2	2276,-	**OE-fit**	B,D
			8x18	7	Nitro Spark G.Blk/Grey	45	47	4	3476,-		B
			8x18	8	Nitro Spark G.Blk/Red	45	47	4	3476,-		B
			8x18	9	Nitro Sabre G.Blk	45	47	4	3496,-		B,C
			8x18	10	Nitro Demon H.Slv	47	47	0	2972,-		B,C
			8x18	11	Nitro Demon	47	47	0	2784,-		B,C
			8x18	17	BM Drive M.Gun	45	47	4	2296,-		

Forts. neste side »

Bilmerke - Bilmodell	Årsmodell	Dimensjon	Felgdim.	Bilde	Felgmodell	ET Felg	ET Bil	Avvik ET	Veil. Pris eks. MVA	Merknader	B,C D, M
AUDI (forts.)			PCD: **5-112** Bolt - Mutter: **14x1,50B**		CB: **57,1**						
			8x18	20	ATS Antares	47	47	0	3056,-		B,C
			8x18	21	ATS Antares G.Blk	47	47	0	3136,-		B,C
			8x18	29	CSP 13	48	47	-2	2932,-	**OE-fit**	B,C,D
			8x18	30	CSP 13 M.Gun	48	47	-2	2932,-	**OE-fit**	B,C,D
			8x18	48	Image Motion	44	47	6	2204,-	**OE-fit**	B,D
			8x18	49	Image Motion G.Gun	44	47	6	2204,-	**OE-fit**	B,D
			8x18	50	Image Legend	45	47	4	2276,-	**OE-fit**	B,D
			8x19	10	Nitro Demon H.Slv	47	47	0	3624,-		B,C
			8x19	11	Nitro Demon	47	47	0	3376,-		B,C
			8x19	29	CSP 13	48	47	-2	3404,-	**OE-fit**	B,C,D
			8x19	30	CSP 13 M.Gun	48	47	-2	3404,-	**OE-fit**	B,C,D
			8x19	48	Image Motion	44	47	6	2532,-	**OE-fit**	B,D
			8x19	49	Image Motion G.Gun	44	47	6	2532,-	**OE-fit**	B,D
			8,5x19	3	Nitro Turismo FF	43	47	8	4492,-		D
			8,5x19	4	Nitro Turismo FF G.Gun/Pol	43	47	8	4644,-		D
			8,5x19	5	Nitro Volcano G.Gun	40	47	14	4388,-		B,C
			8,5x19	6	Nitro Volcano	40	47	14	4632,-		B,C
			8,5x19	9	Nitro Sabre G.Blk	45	47	4	4292,-		B,C
			9x19	3	Nitro Turismo FF	45	47	4	4660,-		
			9x19	4	Nitro Turismo FF G.Gun/Pol	45	47	4	4812,-		
			9x19	10	Nitro Demon H.Slv	45	47	4	3624,-		B,C
			9x19	11	Nitro Demon	45	47	4	3376,-		B,C
			9x19	12	Nitro Edge M.Blk	48	47	-2	3884,-		
			9,5x19	5	Nitro Volcano G.Gun	40	47	14	4388,-		B,C
			9,5x19	6	Nitro Volcano	40	47	14	4632,-		B,C,M
			8,5x20	3	Nitro Turismo FF	43	47	8	4812,-		
			8,5x20	4	Nitro Turismo FF G.Gun/Pol	43	47	8	4964,-		
			8,5x20	7	Nitro Spark G.Blk/Grey	45	47	4	4660,-		B
			8,5x20	8	Nitro Spark G.Blk/Red	45	47	4	4660,-		B
			8,5x20	9	Nitro Sabre G.Blk	45	47	4	4800,-		B,C
			8,5x20	10	Nitro Demon H.Slv	45	47	4	4104,-		B,C
			8,5x20	11	Nitro Demon	45	47	4	3808,-		B,C
			9x20	5	Nitro Volcano G.Gun	40	47	14	4824,-		B,C,M
			9x20	6	Nitro Volcano	40	47	14	5164,-		B,C,M
			9x20	10	Nitro Demon H.Slv	48	47	-2	4104,-		B,C
			9x20	12	Nitro Edge M.Blk	48	47	-2	4220,-		
			9x20	15	Nitro Magnum	40	47	14	4572,-		M
			9,5x20	5	Nitro Volcano G.Gun	40	47	14	4824,-		B,C,M
			9,5x20	6	Nitro Volcano	40	47	14	5164,-		B,C,M
AUDI			PCD: **5-112** Bolt - Mutter: **14x1,50B**		CB: **57,1**						
A4 (8E) avant	11.04-04.08	16-20	6,5x16	20	ATS Antares	41	42	2	1852,-	**OE-fit**	B,C,D
Facelift			6,5x16	21	ATS Antares G.Blk	41	42	2	1896,-	**OE-fit**	B,C,D
A4 (8E) sedan	11.04-10.07	16-20	6,5x16	29	CSP 13	41	42	2	1716,-	**OE-fit**	B,C,D
Facelift			6,5x16	30	CSP 13 M.Gun	41	42	2	1716,-	**OE-fit**	B,C,D
A4 (8H) cab	04.02-04.09	16-20	6,5x16	36	Image Colt	35	42	14	1624,-		B
A6 (4F) allroad	06.06-03.12	17-20	6,5x16	40	Image Spirit	41	42	2	1264,-	**OE-fit**	B,D
A6 (4F) avant	05.04-08.11	16-20	6,5x16	46	Image Stella	41	42	2	1548,-	**OE-fit**	B,D
3.0TDI, 3.0TFSI 17"			6,5x16	47	Image Stella M.Blk	41	42	2	1548,-	**OE-fit**	B,D
3.2FSI, 4.2FSI 17"			6,5x16	48	Image Motion	41	42	2	1468,-	**OE-fit**	B,D
A6 (4F) sedan	05.04-02.11	16-20	6,5x16	50	Image Legend	41	42	2	1544,-	**OE-fit**	B,D
3.0TDI, 3.0TFSI 17"			6,5x16	92	Image Colt L.Gun	35	42	14	1548,-		B
3.2FSI, 4.2FSI 17"			7x16	17	BM Drive M.Gun	38	42	8	1476,-		D
			7,5x16	20	ATS Antares	37	42	10	1852,-		B,C
			7,5x16	21	ATS Antares G.Blk	37	42	10	1896,-		B,C
			7x17	17	BM Drive M.Gun	40	42	4	1736,-		D
			7x17	20	ATS Antares	40	42	4	2264,-	**OE-fit**	B,D
			7x17	21	ATS Antares G.Blk	40	42	4	2380,-	**OE-fit**	B,D
			7x17	29	CSP 13	40	42	4	2152,-	**OE-fit**	B,C,D
			7x17	30	CSP 13 M.Gun	40	42	4	2152,-	**OE-fit**	B,C,D
			7x17	40	Image Spirit	40	42	4	1476,-	**OE-fit**	B,D
			7x17	46	Image Stella	40	42	4	1812,-	**OE-fit**	B,D
			7x17	47	Image Stella M.Blk	40	42	4	1812,-	**OE-fit**	B,D
			7x17	48	Image Motion	40	42	4	1736,-	**OE-fit**	B,D
			7x17	49	Image Motion G.Gun	40	42	4	1736,-	**OE-fit**	B,D
			7,5x17	16	Advanti Inizio DST	42	42	0	3324,-		B
			7,5x17	36	Image Colt	35	42	14	1956,-		B
			7,5x17	46	Image Stella	35	42	14	1812,-		B
			7,5x17	47	Image Stella M.Blk	35	42	14	1812,-		B
			7,5x17	50	Image Legend	40	42	4	1812,-	**OE-fit**	B,D
			7,5x17	92	Image Colt L.Gun	35	42	14	1876,-		B
			8x17	9	Nitro Sabre G.Blk	35	42	14	3108,-		B,C
			8x17	17	BM Drive M.Gun	35	42	14	1736,-		B
			8x17	48	Image Motion	35	42	14	1736,-		B
			8x17	49	Image Motion G.Gun	35	42	14	1736,-		B
			7,5x18	29	CSP 13	35	42	14	2932,-	**OE-fit**	B,C,D
			7,5x18	30	CSP 13 M.Gun	35	42	14	2932,-	**OE-fit**	B,C,D
			8x18	2	Nitro Sapphire FF	39	42	6	4036,-		B,C
			8x18	7	Nitro Spark G.Blk/Grey	35	42	14	3476,-		B
			8x18	9	Nitro Sabre G.Blk	35	42	14	3496,-		B,C
			8x18	10	Nitro Demon H.Slv	40	42	4	2972,-		B,C
			8x18	11	Nitro Demon	40	42	4	2784,-		B,C
			8x18	16	Advanti Inizio DST	35	42	14	3828,-		B
			8x18	17	BM Drive M.Gun	40	42	4	2296,-		D
			8x18	29	CSP 13	40	42	4	2932,-	**OE-fit**	B,C,D
			8x18	30	CSP 13 M.Gun	40	42	4	2932,-	**OE-fit**	B,C,D
			8x18	36	Image Colt	35	42	14	2412,-		B

Forts. neste side »

Bilmerke - Bilmodell	Årsmodell	Dimensjon	Felgdim.	Bilde	Felgmodell	ET Felg	ET Bil	Avvik ET	Veil. Pris eks. MVA	Merknader	B,C D, M
AUDI (forts.)				PCD: **5-112** Bolt - Mutter: **14x1,50B**		CB: **57,1**					
			8x18	40	Image Spirit	40	42	4	1912,-	**OE-fit**	B,D
			8x18	46	Image Stella	40	42	4	2276,-	**OE-fit**	B,D
			8x18	47	Image Stella M.Blk	40	42	4	2276,-	**OE-fit**	B,D
			8x18	48	Image Motion	35	42	14	2204,-		B
			8x18	49	Image Motion G.Gun	35	42	14	2204,-		B
			8x18	50	Image Legend	40	42	4	2276,-	**OE-fit**	B,D
			8x18	92	Image Colt L.Gun	35	42	14	2296,-		B
			8,5x18	16	Advanti Inizio DST	35	42	14	3828,-		B,M
			8x19	2	Nitro Sapphire FF	39	42	6	4684,-		B,C
			8x19	10	Nitro Demon H.Slv	40	42	4	3624,-		B,C
			8x19	16	Advanti Inizio DST	35	42	14	4412,-		B
			8x19	29	CSP 13	40	42	4	3404,-	**OE-fit**	B,C,D
			8x19	30	CSP 13 M.Gun	40	42	4	3404,-	**OE-fit**	B,C,D
			8x19	48	Image Motion	35	42	14	2532,-		B
			8x19	49	Image Motion G.Gun	35	42	14	2532,-		B
			8,5x19	2	Nitro Sapphire FF	40	42	4	4684,-		B,C
			8,5x19	3	Nitro Turismo FF	35	42	14	4492,-		
			8,5x19	4	Nitro Turismo FF G.Gun/Pol	35	42	14	4644,-		
			8,5x19	5	Nitro Volcano G.Gun	40	42	4	4388,-		B,C
			8,5x19	6	Nitro Volcano	40	42	4	4632,-		B,C
			8,5x19	9	Nitro Sabre G.Blk	35	42	14	4292,-		B,C
			8,5x19	16	Advanti Inizio DST	35	42	14	4412,-		B,M
			8,5x19	36	Image Colt	35	42	14	3028,-		B
			8,5x19	92	Image Colt L.Gun	35	42	14	2876,-		B
			8,5x20	2	Nitro Sapphire FF	40	42	4	5216,-		B,C
			8,5x20	3	Nitro Turismo FF	35	42	14	4812,-		
			8,5x20	4	Nitro Turismo FF G.Gun/Pol	35	42	14	4964,-		
			8,5x20	7	Nitro Spark G.Blk/Grey	35	42	14	4660,-		B,M
			8,5x20	9	Nitro Sabre G.Blk	35	42	14	4800,-		B,C
			8,5x20	10	Nitro Demon H.Slv	38	42	8	4104,-		B,C
			8,5x20	11	Nitro Demon	38	42	8	3808,-		B,C
			8,5x20	36	Image Colt	35	42	14	3432,-		B
			8,5x20	92	Image Colt L.Gun	35	42	14	3276,-		B
			9x20	2	Nitro Sapphire FF	38	42	8	5216,-		B,C,M
			9x20	5	Nitro Volcano G.Gun	40	42	4	4824,-		B,C,M
			9x20	6	Nitro Volcano	40	42	4	5164,-		B,C,M
			9x20	10	Nitro Demon H.Slv	40	42	4	4104,-		B,C,M
			9x20	11	Nitro Demon	40	42	4	3808,-		B,C,M
AUDI				PCD: **5-112** Bolt - Mutter: **14x1,50B**		CB: **66,5**					
A4 (B8) avant	05.08-10.15	16-20	6,5x16	36	Image Colt	35	47	24	1624,-	**OE-fit**	B,D
A4 (B8) sedan	11.07-10.15	16-20	6,5x16	92	Image Colt L.Gun	35	47	24	1548,-	**OE-fit**	B,D
S4 (B8)	02.09-06.16	18-20	7x16	17	BM Drive M.Gun	35	47	24	1476,-		D
			7x16	20	ATS Antares	35	47	24	1852,-	**OE-fit**	B,C,D
			7x16	21	ATS Antares G.Blk	35	47	24	1896,-	**OE-fit**	B,C,D
			7x16	40	Image Spirit	35	47	24	1264,-	**OE-fit**	B,D
			7x16	48	Image Motion	35	47	24	1468,-	**OE-fit**	B,D
			7x16	50	Image Legend	35	47	24	1544,-	**OE-fit**	B,D
			7,5x17	9	Nitro Sabre G.Blk	45	47	4	3052,-	**OE-fit**	B,C,D
			7,5x17	16	Advanti Inizio DST	42	47	10	3324,-	**OE-fit**	B,D
			7,5x17	20	ATS Antares	38	47	18	2264,-	**OE-fit**	B,C,D
			7,5x17	21	ATS Antares G.Blk	38	47	18	2380,-	**OE-fit**	B,C,D
			7,5x17	36	Image Colt	45	47	4	1956,-	**OE-fit**	B,D
			7,5x17	46	Image Stella	35	47	24	1812,-	**OE-fit**	B,D
			7,5x17	47	Image Stella M.Blk	35	47	24	1812,-	**OE-fit**	B,D
			7,5x17	92	Image Colt L.Gun	45	47	4	1876,-	**OE-fit**	B,D
			8x17	17	BM Drive M.Gun	45	47	4	1736,-		D
			8x17	40	Image Spirit	35	47	24	1476,-	**OE-fit**	B,D
			8x17	48	Image Motion	45	47	4	1736,-	**OE-fit**	B,D
			8x18	7	Nitro Spark G.Blk/Grey	45	47	4	3476,-	**OE-fit**	B,D
			8x18	8	Nitro Spark G.Blk/Red	45	47	4	3476,-	**OE-fit**	B,D
			8x18	9	Nitro Sabre G.Blk	45	47	4	3496,-	**OE-fit**	B,C,D
			8x18	10	Nitro Demon H.Slv	40	47	14	2972,-	**OE-fit**	B,C,D
			8x18	11	Nitro Demon	40	47	14	2784,-	**OE-fit**	B,C,D
			8x18	16	Advanti Inizio DST	45	47	4	3828,-	**OE-fit**	B,D
			8x18	17	BM Drive M.Gun	45	47	4	2296,-		D
			8x18	20	ATS Antares	47	47	0	3056,-	**OE-fit**	B,C,D
			8x18	21	ATS Antares G.Blk	47	47	0	3136,-	**OE-fit**	B,C,D
			8x18	36	Image Colt	45	47	4	2412,-	**OE-fit**	B,D
			8x18	40	Image Spirit	35	47	24	1912,-	**OE-fit**	B,D
			8x18	46	Image Stella	35	47	24	2276,-	**OE-fit**	B,D
			8x18	47	Image Stella M.Blk	35	47	24	2276,-	**OE-fit**	B,D
			8x18	48	Image Motion	45	47	4	2204,-	**OE-fit**	B,D
			8x18	92	Image Colt L.Gun	45	47	4	2296,-	**OE-fit**	B,D
			8x19	10	Nitro Demon H.Slv	40	47	14	3624,-	**OE-fit**	B,C,D
			8x19	16	Advanti Inizio DST	45	47	4	4412,-	**OE-fit**	B,D
			8x19	48	Image Motion	45	47	4	2532,-	**OE-fit**	B,D
			8,5x19	3	Nitro Turismo FF	35	47	24	4492,-		D
			8,5x19	4	Nitro Turismo FF G.Gun/Pol	35	47	24	4644,-		D
			8,5x19	5	Nitro Volcano G.Gun	40	47	14	4388,-	**OE-fit**	B,C,D
			8,5x19	6	Nitro Volcano	40	47	14	4632,-	**OE-fit**	B,C,D
			8,5x19	9	Nitro Sabre G.Blk	45	47	4	4292,-	**OE-fit**	B,C,D
			8,5x19	36	Image Colt	45	47	4	3028,-	**OE-fit**	B,D
			8,5x19	92	Image Colt L.Gun	45	47	4	2876,-	**OE-fit**	B,D
			9x19	12	Nitro Edge M.Blk	40	47	14	3884,-		D,M
			8,5x20	3	Nitro Turismo FF	35	47	24	4812,-		D
			8,5x20	4	Nitro Turismo FF G.Gun/Pol	35	47	24	4964,-		D

Forts. neste side »

Bilmerke - Bilmodell	Årsmodell	Dimensjon	Felgdim.	Bilde	Felgmodell	ET Felg	ET Bil	Avvik ET	Veil. Pris eks. MVA	Merknader	B,C D, M
AUDI (forts.)			PCD: **5-112** Bolt - Mutter: **14x1,50B**		CB: **66,5**						
			8,5x20	5	Nitro Volcano G.Gun	45	47	4	4824,-	**OE-fit**	B,C,D
			8,5x20	6	Nitro Volcano	45	47	4	5164,-	**OE-fit**	B,C,D
			8,5x20	7	Nitro Spark G.Blk/Grey	45	47	4	4660,-	**OE-fit**	B,D
			8,5x20	8	Nitro Spark G.Blk/Red	45	47	4	4660,-		D
			8,5x20	9	Nitro Sabre G.Blk	45	47	4	4800,-	**OE-fit**	B,C,D
			8,5x20	10	Nitro Demon H.Slv	45	47	4	4104,-	**OE-fit**	B,C,D
			8,5x20	11	Nitro Demon	45	47	4	3808,-	**OE-fit**	B,C,D
			8,5x20	36	Image Colt	45	47	4	3432,-	**OE-fit**	B,D
			8,5x20	92	Image Colt L.Gun	45	47	4	3276,-	**OE-fit**	B,D
			9x20	5	Nitro Volcano G.Gun	40	47	14	4824,-	**OE-fit**	B,C,D,M
			9x20	6	Nitro Volcano	40	47	14	5164,-	**OE-fit**	B,C,D,M
			9x20	10	Nitro Demon H.Slv	40	47	14	4104,-	**OE-fit**	B,C,D,M
			9x20	11	Nitro Demon	40	47	14	3808,-	**OE-fit**	B,C,D,M
			9x20	12	Nitro Edge M.Blk	40	47	14	4220,-		D,M
			9x20	15	Nitro Magnum	40	47	14	4572,-		D,M
AUDI			PCD: **5-112** Bolt - Mutter: **14x1,50B**		CB: **66,5**						
A4 (B9) avant	11.15-	16-20	6,5x16	36	Image Colt	35	38	6	1624,-	**OE-fit**	B,D
2.0TDI (140kW), 3.0TDI 17"			6,5x16	92	Image Colt L.Gun	35	38	6	1548,-	**OE-fit**	B,D
2.0TFSI (185kW) 17"			7x16	17	BM Drive M.Gun	35	38	6	1476,-		D
A4 (B9) sedan	11.15-	16-20	7x16	20	ATS Antares	35	38	6	1852,-	**OE-fit**	B,C,D
2.0TDI (140kW), 3.0TDI 17"			7x16	21	ATS Antares G.Blk	35	38	6	1896,-	**OE-fit**	B,C,D
2.0TFSI (185kW) 17"			7x16	40	Image Spirit	35	38	6	1264,-	**OE-fit**	B,D
S4 (B9)	08.16-	18-20	7x16	48	Image Motion	35	38	6	1468,-	**OE-fit**	B,D
			7x16	50	Image Legend	35	38	6	1544,-	**OE-fit**	B,D
			7,5x17	20	ATS Antares	38	38	0	2264,-	**OE-fit**	B,C,D
			7,5x17	21	ATS Antares G.Blk	38	38	0	2380,-	**OE-fit**	B,C,D
			7,5x17	36	Image Colt	35	38	6	1956,-	**OE-fit**	B,D
			7,5x17	46	Image Stella	35	38	6	1812,-	**OE-fit**	B,D
			7,5x17	47	Image Stella M.Blk	35	38	6	1812,-	**OE-fit**	B,D
			7,5x17	50	Image Legend	35	38	6	1812,-	**OE-fit**	B,D
			7,5x17	92	Image Colt L.Gun	35	38	6	1876,-	**OE-fit**	B,D
			8x17	9	Nitro Sabre G.Blk	35	38	6	3108,-	**OE-fit**	B,C,D
			8x17	17	BM Drive M.Gun	35	38	6	1736,-	**OE-fit**	B,D
			8x17	40	Image Spirit	35	38	6	1476,-	**OE-fit**	B,D
			8x17	48	Image Motion	35	38	6	1736,-	**OE-fit**	B,D
			8x17	49	Image Motion G.Gun	35	38	6	1736,-	**OE-fit**	B,D
			8x18	2	Nitro Sapphire FF	39	38	-2	4036,-	**OE-fit**	B,C,D
			8x18	7	Nitro Spark G.Blk/Grey	35	38	6	3476,-	**OE-fit**	B,D
			8x18	9	Nitro Sabre G.Blk	35	38	6	3496,-	**OE-fit**	B,C,D
			8x18	10	Nitro Demon H.Slv	40	38	-4	2972,-	**OE-fit**	B,C,D
			8x18	11	Nitro Demon	40	38	-4	2784,-	**OE-fit**	B,C,D
			8x18	16	Advanti Inizio DST	35	38	6	3828,-	**OE-fit**	B,D
			8x18	17	BM Drive M.Gun	35	38	6	2296,-	**OE-fit**	B,D
			8x18	20	ATS Antares	40	38	-4	3056,-	**OE-fit**	B,C,D
			8x18	21	ATS Antares G.Blk	40	38	-4	3136,-	**OE-fit**	B,C,D
			8x18	36	Image Colt	35	38	6	2412,-	**OE-fit**	B,D
			8x18	40	Image Spirit	35	38	6	1912,-	**OE-fit**	B,D
			8x18	46	Image Stella	35	38	6	2276,-	**OE-fit**	B,D
			8x18	47	Image Stella M.Blk	35	38	6	2276,-	**OE-fit**	B,D
			8x18	48	Image Motion	35	38	6	2204,-	**OE-fit**	B,D
			8x18	49	Image Motion G.Gun	35	38	6	2204,-	**OE-fit**	B,D
			8x18	50	Image Legend	35	38	6	2276,-	**OE-fit**	B,D
			8x18	92	Image Colt L.Gun	35	38	6	2296,-	**OE-fit**	B,D
			8,5x18	16	Advanti Inizio DST	35	38	6	3828,-	**OE-fit**	B,D
			8x19	2	Nitro Sapphire FF	39	38	-2	4684,-	**OE-fit**	B,C,D
			8x19	10	Nitro Demon H.Slv	40	38	-4	3624,-	**OE-fit**	B,C,D
			8x19	16	Advanti Inizio DST	35	38	6	4412,-	**OE-fit**	B,D
			8x19	48	Image Motion	35	38	6	2532,-	**OE-fit**	B,D
			8x19	49	Image Motion G.Gun	35	38	6	2532,-	**OE-fit**	B,D
			8,5x19	2	Nitro Sapphire FF	40	38	-4	4684,-	**OE-fit**	B,C,D
			8,5x19	3	Nitro Turismo FF	35	38	6	4492,-		D
			8,5x19	4	Nitro Turismo FF G.Gun/Pol	35	38	6	4644,-		D
			8,5x19	5	Nitro Volcano G.Gun	32	38	12	4388,-	**OE-fit**	B,C,D
			8,5x19	6	Nitro Volcano	32	38	12	4632,-	**OE-fit**	B,C,D
			8,5x19	9	Nitro Sabre G.Blk	35	38	6	4292,-	**OE-fit**	B,C,D
			8,5x19	16	Advanti Inizio DST	35	38	6	4412,-	**OE-fit**	B,D
			8,5x19	36	Image Colt	35	38	6	3028,-	**OE-fit**	B,D
			8,5x19	92	Image Colt L.Gun	35	38	6	2876,-	**OE-fit**	B,D
			9x19	12	Nitro Edge M.Blk	40	38	-4	3884,-		D,M
			8,5x20	1	Nitro Throne FF	30	38	16	5060,-		D
			8,5x20	2	Nitro Sapphire FF	40	38	-4	5216,-	**OE-fit**	B,C,D
			8,5x20	3	Nitro Turismo FF	35	38	6	4812,-		D
			8,5x20	4	Nitro Turismo FF G.Gun/Pol	35	38	6	4964,-		D
			8,5x20	7	Nitro Spark G.Blk/Grey	35	38	6	4660,-	**OE-fit**	B,D
			8,5x20	9	Nitro Sabre G.Blk	35	38	6	4800,-	**OE-fit**	B,C,D
			8,5x20	10	Nitro Demon H.Slv	38	38	0	4104,-	**OE-fit**	B,C,D
			8,5x20	11	Nitro Demon	38	38	0	3808,-	**OE-fit**	B,C,D
			8,5x20	24	ATS Mizar	40	38	-4	5948,-		D
			8,5x20	25	ATS Mizar G.Blk	40	38	-4	6020,-		D
			8,5x20	36	Image Colt	35	38	6	3432,-	**OE-fit**	B,D
			8,5x20	92	Image Colt L.Gun	35	38	6	3276,-	**OE-fit**	B,D
			9x20	1	Nitro Throne FF	35	38	6	5060,-		D
			9x20	2	Nitro Sapphire FF	38	38	0	5216,-	**OE-fit**	B,C,D,M
			9x20	5	Nitro Volcano G.Gun	40	38	-4	4824,-	**OE-fit**	B,C,D,M
			9x20	6	Nitro Volcano	40	38	-4	5164,-	**OE-fit**	B,C,D,M
			9x20	10	Nitro Demon H.Slv	40	38	-4	4104,-	**OE-fit**	B,C,D,M

Forts. neste side »

Bilmerke - Bilmodell	Årsmodell	Dimensjon	Felgdim.	Bilde	Felgmodell	ET Felg	ET Bil	Avvik ET	Veil. Pris eks. MVA	Merknader	B,C D, M
AUDI (forts.)				PCD: **5-112** Bolt - Mutter: **14x1,50B**		CB: **66,5**					
			9x20	11	Nitro Demon	40	38	-4	3808,-	**OE-fit**	B,C,D,M
			9x20	12	Nitro Edge M.Blk	40	38	-4	4220,-		D,M
			9x20	15	Nitro Magnum	40	38	-4	4572,-		D,M
			9,5x20	5	Nitro Volcano G.Gun	40	38	-4	4824,-	**OE-fit**	B,C,D,M
			9,5x20	6	Nitro Volcano	40	38	-4	5164,-	**OE-fit**	B,C,D,M
AUDI				PCD: **5-112** Bolt - Mutter: **14x1,50B**		CB: **66,5**					
A6 (4G) allroad	04.12-04.19	18-22	6,5x16	36	Image Colt	35	37	4	1624,-	**OE-fit**	B,D
A6 (4G) avant	08.11-11.14	16-21	6,5x16	92	Image Colt L.Gun	35	37	4	1548,-	**OE-fit**	B,D
3.0TDI (180kW), 3.0TFSI 17"			7,5x16	20	ATS Antares	37	37	0	1852,-	**OE-fit**	B,C,D
A6 (4G) avant	12.14-07.18	17-21	7,5x16	21	ATS Antares G.Blk	37	37	0	1896,-	**OE-fit**	B,C,D
3.0TFSI, 3.0TDI (235kW) 18"			7,5x17	20	ATS Antares	37	37	0	2264,-	**OE-fit**	B,C,D
3.0TDI Competition (240kW) 19"			7,5x17	21	ATS Antares G.Blk	37	37	0	2380,-	**OE-fit**	B,C,D
A6 (4G) sedan	03.11-11.14	16-21	7,5x17	36	Image Colt	35	37	4	1956,-	**OE-fit**	B,D
3.0TDI (180kW), 3.0TFSI 17"			7,5x17	46	Image Stella	35	37	4	1812,-	**OE-fit**	B,D
A6 (4G) sedan	12.14-07.18	17-21	7,5x17	47	Image Stella M.Blk	35	37	4	1812,-	**OE-fit**	B,D
3.0TFSI, 3.0TDI (235kW) 18"			7,5x17	50	Image Legend	35	37	4	1812,-	**OE-fit**	B,D
3.0TDI Competition (240kW) 19"			7,5x17	92	Image Colt L.Gun	35	37	4	1876,-	**OE-fit**	B,D
			8x17	9	Nitro Sabre G.Blk	35	37	4	3108,-	**OE-fit**	B,C,D
			8x17	17	BM Drive M.Gun	35	37	4	1736,-	**OE-fit**	B,D
			8x17	40	Image Spirit	35	37	4	1476,-	**OE-fit**	B,D
			8x17	48	Image Motion	35	37	4	1736,-	**OE-fit**	B,D
			8x17	49	Image Motion G.Gun	35	37	4	1736,-	**OE-fit**	B,D
			8x18	2	Nitro Sapphire FF	39	37	-4	4036,-	**OE-fit**	B,C,D
			8x18	7	Nitro Spark G.Blk/Grey	35	37	4	3476,-	**OE-fit**	B,D
			8x18	9	Nitro Sabre G.Blk	35	37	4	3496,-	**OE-fit**	B,C,D
			8x18	10	Nitro Demon H.Slv	35	37	4	2972,-	**OE-fit**	B,C,D
			8x18	11	Nitro Demon	35	37	4	2784,-	**OE-fit**	B,C,D
			8x18	16	Advanti Inizio DST	35	37	4	3828,-	**OE-fit**	B,D
			8x18	17	BM Drive M.Gun	35	37	4	2296,-	**OE-fit**	B,D
			8x18	20	ATS Antares	39	37	-4	3056,-	**OE-fit**	B,C,D
			8x18	21	ATS Antares G.Blk	39	37	-4	3136,-	**OE-fit**	B,C,D
			8x18	36	Image Colt	35	37	4	2412,-	**OE-fit**	B,D
			8x18	40	Image Spirit	35	37	4	1912,-	**OE-fit**	B,D
			8x18	46	Image Stella	35	37	4	2276,-	**OE-fit**	B,D
			8x18	47	Image Stella M.Blk	35	37	4	2276,-	**OE-fit**	B,D
			8x18	48	Image Motion	35	37	4	2204,-	**OE-fit**	B,D
			8x18	49	Image Motion G.Gun	35	37	4	2204,-	**OE-fit**	B,D
			8x18	50	Image Legend	35	37	4	2276,-	**OE-fit**	B,D
			8x18	92	Image Colt L.Gun	35	37	4	2296,-	**OE-fit**	B,D
			8,5x18	16	Advanti Inizio DST	35	37	4	3828,-	**OE-fit**	B,D
			9x18	16	Advanti Inizio DST	40	37	-6	3828,-		D
			8x19	2	Nitro Sapphire FF	39	37	-4	4684,-	**OE-fit**	B,C,D
			8x19	10	Nitro Demon H.Slv	35	37	4	3624,-	**OE-fit**	B,C,D
			8x19	11	Nitro Demon	35	37	4	3376,-	**OE-fit**	B,C,D
			8x19	16	Advanti Inizio DST	35	37	4	4412,-	**OE-fit**	B,D
			8x19	48	Image Motion	35	37	4	2532,-	**OE-fit**	B,D
			8x19	49	Image Motion G.Gun	35	37	4	2532,-	**OE-fit**	B,D
			8,5x19	2	Nitro Sapphire FF	40	37	-6	4684,-	**OE-fit**	B,C,D
			8,5x19	3	Nitro Turismo FF	35	37	4	4492,-		D
			8,5x19	4	Nitro Turismo FF G.Gun/Pol	35	37	4	4644,-		D
			8,5x19	5	Nitro Volcano G.Gun	40	37	-6	4388,-	**OE-fit**	B,C,D
			8,5x19	6	Nitro Volcano	40	37	-6	4632,-	**OE-fit**	B,C,D
			8,5x19	9	Nitro Sabre G.Blk	35	37	4	4292,-	**OE-fit**	B,C,D
			8,5x19	16	Advanti Inizio DST	35	37	4	4412,-	**OE-fit**	B,D
			8,5x19	36	Image Colt	35	37	4	3028,-	**OE-fit**	B,D
			8,5x19	92	Image Colt L.Gun	35	37	4	2876,-	**OE-fit**	B,D
			9x19	12	Nitro Edge M.Blk	40	37	-6	3884,-		D
			9x19	26	CSP 18 G.Blk/pol	38	37	-2	3596,-		D
			9x19	27	CSP 18	38	37	-2	3444,-		D
			9x19	28	CSP 18 G.Blk	38	37	-2	3444,-		D
			9,5x19	3	Nitro Turismo FF	40	37	-6	4660,-		D,M
			9,5x19	4	Nitro Turismo FF G.Gun/Pol	40	37	-6	4812,-		D,M
			9,5x19	5	Nitro Volcano G.Gun	40	37	-6	4388,-	**OE-fit**	B,C,D
			9,5x19	6	Nitro Volcano	40	37	-6	4632,-	**OE-fit**	B,C,D,M
			9,5x19	16	Advanti Inizio DST	40	37	-6	4412,-		D,M
			8,5x20	1	Nitro Throne FF	30	37	14	5060,-		D
			8,5x20	2	Nitro Sapphire FF	40	37	-6	5216,-	**OE-fit**	B,C,D
			8,5x20	3	Nitro Turismo FF	35	37	4	4812,-		D
			8,5x20	4	Nitro Turismo FF G.Gun/Pol	35	37	4	4964,-		D
			8,5x20	7	Nitro Spark G.Blk/Grey	35	37	4	4660,-	**OE-fit**	B,D
			8,5x20	9	Nitro Sabre G.Blk	35	37	4	4800,-	**OE-fit**	B,C,D
			8,5x20	10	Nitro Demon H.Slv	38	37	-2	4104,-	**OE-fit**	B,C,D
			8,5x20	11	Nitro Demon	38	37	-2	3808,-	**OE-fit**	B,C,D
			8,5x20	24	ATS Mizar	40	37	-6	5948,-		D
			8,5x20	25	ATS Mizar G.Blk	40	37	-6	6020,-		D
			8,5x20	36	Image Colt	35	37	4	3432,-	**OE-fit**	B,D
			8,5x20	92	Image Colt L.Gun	35	37	4	3276,-	**OE-fit**	B,D
			9x20	1	Nitro Throne FF	35	37	4	5060,-		D
			9x20	2	Nitro Sapphire FF	38	37	-2	5216,-	**OE-fit**	B,C,D
			9x20	5	Nitro Volcano G.Gun	40	37	-6	4824,-	**OE-fit**	B,C,D
			9x20	6	Nitro Volcano	40	37	-6	5164,-	**OE-fit**	B,C,D
			9x20	10	Nitro Demon H.Slv	40	37	-6	4104,-	**OE-fit**	B,C,D
			9x20	11	Nitro Demon	40	37	-6	3808,-	**OE-fit**	B,C,D
			9x20	12	Nitro Edge M.Blk	40	37	-6	4220,-		D
			9x20	15	Nitro Magnum	40	37	-6	4572,-		D
			9,5x20	5	Nitro Volcano G.Gun	40	37	-6	4824,-	**OE-fit**	B,C,D,M

Forts. neste side »

Bilmerke - Bilmodell	Årsmodell	Dimensjon	Felgdim.	Bilde	Felgmodell	ET Felg	ET Bil	Avvik ET	Veil. Pris eks. MVA	Merknader	B,C D, M
AUDI (forts.)			PCD: **5-112** Bolt - Mutter: **14x1,50B**			CB: **66,5**					
			9,5x20	6	Nitro Volcano	40	37	-6	5164,-	**OE-fit**	B,C,D,M
			10,5x20	5	Nitro Volcano G.Gun	42	37	-10	4824,-	**OE-fit**, kun bak	B,C,D,M
			10,5x20	6	Nitro Volcano	42	37	-10	5164,-	**OE-fit**, kun bak	B,C,D,M
			9x21	5	Nitro Volcano G.Gun	40	37	-6	5540,-	**OE-fit**	B,C,D
			9x21	6	Nitro Volcano	40	37	-6	5996,-	**OE-fit**	B,C,D
			9x21	24	ATS Mizar	37	37	0	8276,-		D
			9x21	25	ATS Mizar G.Blk	37	37	0	8352,-		D
			9,5x21	5	Nitro Volcano G.Gun	40	37	-6	5540,-	**OE-fit**	B,C,D,M
			9,5x21	6	Nitro Volcano	40	37	-6	5996,-		D,M
			10,5x21	5	Nitro Volcano G.Gun	42	37	-10	5540,-	**OE-fit**, kun bak	B,C,D,M
			10,5x21	6	Nitro Volcano	42	37	-10	5996,-	**OE-fit**, kun bak	B,C,D,M
			9x22	15	Nitro Magnum	40	37	-6	5420,-		D
			9,5x22	1	Nitro Throne FF	35	37	4	6276,-		D,M
			10,5x22	15	Nitro Magnum	42	37	-10	5420,-	Kun bak	D,M
AUDI			PCD: **5-112** Bolt - Mutter: **14x1,50B**			CB: **66,5**					
A6 (4G) avant	01.15-07.18	18-21	8x18	7	Nitro Spark G.Blk/Grey	35	43	16	3476,-	**OE-fit**	B,D
3.0TDI Competition (240kW) 20"			8x18	10	Nitro Demon H.Slv	35	43	16	2972,-	**OE-fit**	B,C,D
A6 (4G) sedan	01.15-07.18	18-21	8x18	11	Nitro Demon	35	43	16	2784,-	**OE-fit**	B,C,D
3.0TDI Competition (240kW) 20"			8x18	17	BM Drive M.Gun	35	43	16	2296,-	**OE-fit**	B,D
			8x18	48	Image Motion	35	43	16	2204,-	**OE-fit**	B,D
			8x18	49	Image Motion G.Gun	35	43	16	2204,-	**OE-fit**	B,D
			8x18	50	Image Legend	35	43	16	2276,-	**OE-fit**	B,D
			8x19	10	Nitro Demon H.Slv	35	43	16	3624,-	**OE-fit**	B,C,D
			8x19	11	Nitro Demon	35	43	16	3376,-	**OE-fit**	B,C,D
			8x19	48	Image Motion	35	43	16	2532,-	**OE-fit**	B,D
			8x19	49	Image Motion G.Gun	35	43	16	2532,-	**OE-fit**	B,D
			8,5x19	3	Nitro Turismo FF	35	43	16	4492,-		D
			8,5x19	4	Nitro Turismo FF G.Gun/Pol	35	43	16	4644,-		D
			8,5x19	9	Nitro Sabre G.Blk	35	43	16	4292,-	**OE-fit**	B,C,D
			8,5x20	3	Nitro Turismo FF	35	43	16	4812,-		D
			8,5x20	4	Nitro Turismo FF G.Gun/Pol	35	43	16	4964,-		D
			8,5x20	7	Nitro Spark G.Blk/Grey	35	43	16	4660,-	**OE-fit**	B,D
			8,5x20	9	Nitro Sabre G.Blk	35	43	16	4800,-	**OE-fit**	B,C,D
			8,5x20	10	Nitro Demon H.Slv	38	43	10	4104,-	**OE-fit**	B,C,D
			8,5x20	11	Nitro Demon	38	43	10	3808,-	**OE-fit**	B,C,D
			9x20	2	Nitro Sapphire FF	38	43	10	5216,-	**OE-fit**	B,C,D
			9x20	10	Nitro Demon H.Slv	40	43	6	4104,-	**OE-fit**	B,C,D
			9x20	11	Nitro Demon	40	43	6	3808,-	**OE-fit**	B,C,D
AUDI			PCD: **5-112** Bolt - Mutter: **14x1,50B**			CB: **66,5**					
A6 (F2) allroad	06.19-	18-22	7,5x17	20	ATS Antares	37	39	4	2264,-	**OE-fit**	B,C,D
A6 (F2) avant	08.18-	17-22	7,5x17	21	ATS Antares G.Blk	37	39	4	2380,-	**OE-fit**	B,C,D
55TFSI (250kW) 18"			7,5x17	36	Image Colt	35	39	8	1956,-	**OE-fit**	B,D
A6 (F2) sedan	08.18-	17-22	7,5x17	46	Image Stella	35	39	8	1812,-	**OE-fit**	B,D
55TFSI (250kW) 18"			7,5x17	47	Image Stella M.Blk	35	39	8	1812,-	**OE-fit**	B,D
			7,5x17	50	Image Legend	35	39	8	1812,-	**OE-fit**	B,D
			7,5x17	92	Image Colt L.Gun	35	39	8	1876,-	**OE-fit**	B,D
			8x17	9	Nitro Sabre G.Blk	35	39	8	3108,-	**OE-fit**	B,C,D
			8x17	17	BM Drive M.Gun	35	39	8	1736,-	**OE-fit**	B,D
			8x17	40	Image Spirit	35	39	8	1476,-	**OE-fit**	B,D
			8x17	48	Image Motion	35	39	8	1736,-	**OE-fit**	B,D
			8x17	49	Image Motion G.Gun	35	39	8	1736,-	**OE-fit**	B,D
			8x18	2	Nitro Sapphire FF	39	39	0	4036,-	**OE-fit**	B,C,D
			8x18	7	Nitro Spark G.Blk/Grey	35	39	8	3476,-	**OE-fit**	B,D
			8x18	9	Nitro Sabre G.Blk	35	39	8	3496,-	**OE-fit**	B,C,D
			8x18	10	Nitro Demon H.Slv	35	39	8	2972,-	**OE-fit**	B,C,D
			8x18	11	Nitro Demon	35	39	8	2784,-	**OE-fit**	B,C,D
			8x18	16	Advanti Inizio DST	35	39	8	3828,-	**OE-fit**	B,D
			8x18	17	BM Drive M.Gun	35	39	8	2296,-	**OE-fit**	B,D
			8x18	20	ATS Antares	39	39	0	3056,-	**OE-fit**	B,C,D
			8x18	21	ATS Antares G.Blk	39	39	0	3136,-	**OE-fit**	B,C,D
			8x18	36	Image Colt	35	39	8	2412,-	**OE-fit**	B,D
			8x18	40	Image Spirit	35	39	8	1912,-	**OE-fit**	B,D
			8x18	46	Image Stella	35	39	8	2276,-	**OE-fit**	B,D
			8x18	47	Image Stella M.Blk	35	39	8	2276,-	**OE-fit**	B,D
			8x18	48	Image Motion	35	39	8	2204,-	**OE-fit**	B,D
			8x18	49	Image Motion G.Gun	35	39	8	2204,-	**OE-fit**	B,D
			8x18	50	Image Legend	35	39	8	2276,-	**OE-fit**	B,D
			8x18	92	Image Colt L.Gun	35	39	8	2296,-	**OE-fit**	B,D
			8,5x18	16	Advanti Inizio DST	35	39	8	3828,-		D
			9x18	16	Advanti Inizio DST	40	39	-2	3828,-		D
			8x19	2	Nitro Sapphire FF	39	39	0	4684,-	**OE-fit**	B,C,D
			8x19	10	Nitro Demon H.Slv	35	39	8	3624,-	**OE-fit**	B,C,D
			8x19	11	Nitro Demon	35	39	8	3376,-	**OE-fit**	B,C,D
			8x19	16	Advanti Inizio DST	35	39	8	4412,-	**OE-fit**	B,D
			8x19	24	ATS Mizar	38	39	2	3720,-		D
			8x19	25	ATS Mizar G.Blk	38	39	2	3868,-		D
			8x19	48	Image Motion	35	39	8	2532,-	**OE-fit**	B,D
			8x19	49	Image Motion G.Gun	35	39	8	2532,-	**OE-fit**	B,D
			8,5x19	2	Nitro Sapphire FF	40	39	-2	4684,-	**OE-fit**	B,C,D
			8,5x19	3	Nitro Turismo FF	35	39	8	4492,-		D
			8,5x19	4	Nitro Turismo FF G.Gun/Pol	35	39	8	4644,-		D
			8,5x19	5	Nitro Volcano G.Gun	40	39	-2	4388,-	**OE-fit**	B,C,D
			8,5x19	6	Nitro Volcano	40	39	-2	4632,-	**OE-fit**	B,C,D
			8,5x19	9	Nitro Sabre G.Blk	35	39	8	4292,-	**OE-fit**	B,C,D
			8,5x19	16	Advanti Inizio DST	35	39	8	4412,-	**OE-fit**	B,D
			8,5x19	36	Image Colt	35	39	8	3028,-	**OE-fit**	B,D

Forts. neste side »

Bilmerke - Bilmodell	Årsmodell	Dimensjon	Felgdim.	Bilde	Felgmodell	ET Felg	ET Bil	Avvik ET	Veil. Pris eks. MVA	Merknader	B,C D, M
AUDI (forts.)				PCD: **5-112** Bolt - Mutter: **14x1,50B**		CB: **66,5**					
			8,5x19	92	Image Colt L.Gun	35	39	8	2876,-	**OE-fit**	B,D
			9x19	12	Nitro Edge M.Blk	40	39	-2	3884,-	**OE-fit**	B,D
			9x19	26	CSP 18 G.Blk/pol	38	39	2	3596,-		D
			9x19	27	CSP 18	38	39	2	3444,-		D
			9x19	28	CSP 18 G.Blk	38	39	2	3444,-		D
			9,5x19	3	Nitro Turismo FF	40	39	-2	4660,-		D,M
			9,5x19	4	Nitro Turismo FF G.Gun/Pol	40	39	-2	4812,-		D,M
			9,5x19	5	Nitro Volcano G.Gun	40	39	-2	4388,-	**OE-fit**	B,C,D,M
			9,5x19	6	Nitro Volcano	40	39	-2	4632,-	**OE-fit**	B,C,D,M
			9,5x19	16	Advanti Inizio DST	40	39	-2	4412,-		D,M
			8,5x20	1	Nitro Throne FF	30	39	18	5060,-		D
			8,5x20	2	Nitro Sapphire FF	40	39	-2	5216,-	**OE-fit**	B,C,D
			8,5x20	3	Nitro Turismo FF	35	39	8	4812,-		D
			8,5x20	4	Nitro Turismo FF G.Gun/Pol	35	39	8	4964,-		D
			8,5x20	7	Nitro Spark G.Blk/Grey	35	39	8	4660,-	**OE-fit**	B,D
			8,5x20	9	Nitro Sabre G.Blk	35	39	8	4800,-	**OE-fit**	B,C,D
			8,5x20	10	Nitro Demon H.Slv	38	39	2	4104,-	**OE-fit**	B,C,D
			8,5x20	11	Nitro Demon	38	39	2	3808,-	**OE-fit**	B,C,D
			8,5x20	36	Image Colt	35	39	8	3432,-	**OE-fit**	B,D
			8,5x20	92	Image Colt L.Gun	35	39	8	3276,-	**OE-fit**	B,D
			9x20	1	Nitro Throne FF	35	39	8	5060,-		D
			9x20	2	Nitro Sapphire FF	38	39	2	5216,-	**OE-fit**	B,C,D
			9x20	5	Nitro Volcano G.Gun	40	39	-2	4824,-	**OE-fit**	B,C,D
			9x20	6	Nitro Volcano	40	39	-2	5164,-	**OE-fit**	B,C,D
			9x20	10	Nitro Demon H.Slv	40	39	-2	4104,-	**OE-fit**	B,C,D
			9x20	11	Nitro Demon	40	39	-2	3808,-	**OE-fit**	B,C,D
			9x20	12	Nitro Edge M.Blk	40	39	-2	4220,-		D
			9x20	15	Nitro Magnum	40	39	-2	4572,-		D
			9,5x20	3	Nitro Turismo FF	30	39	18	4960,-		D,M
			9,5x20	4	Nitro Turismo FF G.Gun/Pol	30	39	18	5048,-		D,M
			9,5x20	5	Nitro Volcano G.Gun	40	39	-2	4824,-	**OE-fit**	B,C,D,M
			9,5x20	6	Nitro Volcano	40	39	-2	5164,-	**OE-fit**	B,C,D,M
			9x21	5	Nitro Volcano G.Gun	32	39	14	5540,-	**OE-fit**	B,C,D
			9x21	6	Nitro Volcano	32	39	14	5996,-	**OE-fit**	B,C,D
			9x21	24	ATS Mizar	37	39	4	8276,-		D
			9x21	25	ATS Mizar G.Blk	37	39	4	8352,-		D
			9,5x21	5	Nitro Volcano G.Gun	40	39	-2	5540,-	**OE-fit**	B,C,D,M
			9,5x21	6	Nitro Volcano	40	39	-2	5996,-	**OE-fit**	B,C,D,M
			9,5x22	1	Nitro Throne FF	35	39	8	6276,-		D,M
AUDI				PCD: **5-112** Bolt - Mutter: **14x1,50B**		CB: **57,1**					
100 (C4) 100	12.90-06.94	15-20	6x15	17	BM Drive M.Gun	43	45	4	1276,-		D
A4 (8E) avant	12.00-10.04	15-20	6x15	29	CSP 13	43	45	4	1468,-	**OE-fit**	B,C,D
1.8 Turbo (120/140kW) 16"			6x15	30	CSP 13 M.Gun	43	45	4	1468,-	**OE-fit**	B,C,D
2.4 2.5TDI, 3.0 16"			6x15	48	Image Motion	43	45	4	1224,-	**OE-fit**	B,D
A4 (8E) sedan	12.00-10.04	15-20	6x15	49	Image Motion G.Gun	43	45	4	1224,-	**OE-fit**	B,D
1.8 Turbo (120/140kW) 16"			6,5x16	29	CSP 13	41	45	8	1716,-	**OE-fit**	B,C,D
2.4 2.5TDI, 3.0 16"			6,5x16	30	CSP 13 M.Gun	41	45	8	1716,-	**OE-fit**	B,C,D
A4 (B5) avant	11.94-11.00	15-20	6,5x16	36	Image Colt	35	45	20	1624,-		B
A4 (B5) sedan	11.94-11.00	15-20	6,5x16	40	Image Spirit	41	45	8	1264,-	**OE-fit**	B,D
A6 (4B) avant	05.97-08.99	15-20	6,5x16	46	Image Stella	41	45	8	1548,-	**OE-fit**	B,D
A6 (4B) avant	08.99-04.04	16-20	6,5x16	47	Image Stella M.Blk	41	45	8	1548,-	**OE-fit**	B,D
Facelift			6,5x16	48	Image Motion	41	45	8	1468,-	**OE-fit**	B,D
A6 (4B) sedan	05.97-08.99	15-20	6,5x16	92	Image Colt L.Gun	35	45	20	1548,-		B
A6 (4B) sedan	08.99-04.04	16-20	7x16	17	BM Drive M.Gun	38	45	14	1476,-		D
Facelift			7x16	50	Image Legend	35	45	20	1544,-		B
A6 (C4) avant	07.94-12.97	15-20	7x17	17	BM Drive M.Gun	40	45	10	1736,-		D
A6 (C4) sedan	07.94-12.97	15-20	7x17	20	ATS Antares	40	45	10	2264,-	**OE-fit**	B,D
S2 coupe	10.90-11.95	15-19	7x17	21	ATS Antares G.Blk	40	45	10	2380,-	**OE-fit**	B,D
			7x17	29	CSP 13	40	45	10	2152,-	**OE-fit**	B,C,D
			7x17	30	CSP 13 M.Gun	40	45	10	2152,-	**OE-fit**	B,C,D
			7x17	40	Image Spirit	40	45	10	1476,-	**OE-fit**	B,D
			7x17	46	Image Stella	40	45	10	1812,-	**OE-fit**	B,D
			7x17	47	Image Stella M.Blk	40	45	10	1812,-	**OE-fit**	B,D
			7x17	48	Image Motion	35	45	20	1736,-	**OE-fit**	B,D
			7,5x17	36	Image Colt	35	45	20	1956,-		B
			7,5x17	46	Image Stella	35	45	20	1812,-		B
			7,5x17	47	Image Stella M.Blk	35	45	20	1812,-		B
			7,5x17	50	Image Legend	35	45	20	1812,-		B
			7,5x17	92	Image Colt L.Gun	35	45	20	1876,-		B
			8x17	9	Nitro Sabre G.Blk	35	45	20	3108,-		B,C
			8x17	17	BM Drive M.Gun	35	45	20	1736,-		B
			8x17	48	Image Motion	35	45	20	1736,-		B
			8x17	49	Image Motion G.Gun	35	45	20	1736,-		B
			7,5x18	29	CSP 13	35	45	20	2932,-	**OE-fit**	B,C,D
			7,5x18	30	CSP 13 M.Gun	35	45	20	2932,-	**OE-fit**	B,C,D
			8x18	7	Nitro Spark G.Blk/Grey	35	45	20	3476,-		
			8x18	9	Nitro Sabre G.Blk	35	45	20	3496,-		B,C
			8x18	10	Nitro Demon H.Slv	35	45	20	2972,-		B,C
			8x18	11	Nitro Demon	35	45	20	2784,-		B,C
			8x18	16	Advanti Inizio DST	35	45	20	3828,-		B
			8x18	17	BM Drive M.Gun	35	45	20	2296,-		B
			8x18	29	CSP 13	40	45	10	2932,-	**OE-fit**	B,C,D
			8x18	30	CSP 13 M.Gun	40	45	10	2932,-	**OE-fit**	B,C,D
			8x18	36	Image Colt	35	45	20	2412,-		B
			8x18	40	Image Spirit	40	45	10	1912,-	**OE-fit**	B,D
			8x18	46	Image Stella	40	45	10	2276,-	**OE-fit**	B,D

Forts. neste side »

Bilmerke - Bilmodell	Årsmodell	Dimensjon	Felgdim.	Bilde	Felgmodell	ET Felg	ET Bil	Avvik ET	Veil. Pris eks. MVA	Merknader	B,C D, M
AUDI (forts.)			PCD: **5-112** Bolt - Mutter: **14x1,50B** CB: **57,1**								
			8x18	47	Image Stella M.Blk	40	45	10	2276,-	**OE-fit**	B,D
			8x18	48	Image Motion	35	45	20	2204,-		B
			8x18	49	Image Motion G.Gun	35	45	20	2204,-		B
			8x18	50	Image Legend	35	45	20	2276,-		B
			8x18	92	Image Colt L.Gun	35	45	20	2296,-		B
			8,5x18	16	Advanti Inizio DST	35	45	20	3828,-		B
			8x19	10	Nitro Demon H.Slv	35	45	20	3624,-		B,C
			8x19	11	Nitro Demon	35	45	20	3376,-		B,C
			8x19	16	Advanti Inizio DST	35	45	20	4412,-		B
			8x19	29	CSP 13	40	45	10	3404,-	**OE-fit**	B,C,D
			8x19	30	CSP 13 M.Gun	40	45	10	3404,-	**OE-fit**	B,C,D
			8x19	48	Image Motion	35	45	20	2532,-		B
			8x19	49	Image Motion G.Gun	35	45	20	2532,-		B
			8,5x19	2	Nitro Sapphire FF	40	45	10	4684,-		B,C
			8,5x19	3	Nitro Turismo FF	35	45	20	4492,-		
			8,5x19	4	Nitro Turismo FF G.Gun/Pol	35	45	20	4644,-		
			8,5x19	5	Nitro Volcano G.Gun	40	45	10	4388,-		B,C
			8,5x19	6	Nitro Volcano	40	45	10	4632,-		B,C
			8,5x19	9	Nitro Sabre G.Blk	35	45	20	4292,-		B,C
			8,5x19	16	Advanti Inizio DST	35	45	20	4412,-		B
			8,5x19	36	Image Colt	35	45	20	3028,-		B
			8,5x19	92	Image Colt L.Gun	35	45	20	2876,-		B
			8,5x20	2	Nitro Sapphire FF	40	45	10	5216,-		B,C
			8,5x20	3	Nitro Turismo FF	35	45	20	4812,-		
			8,5x20	4	Nitro Turismo FF G.Gun/Pol	35	45	20	4964,-		
			8,5x20	7	Nitro Spark G.Blk/Grey	35	45	20	4660,-		
			8,5x20	9	Nitro Sabre G.Blk	35	45	20	4800,-		B,C
			8,5x20	10	Nitro Demon H.Slv	38	45	14	4104,-		B,C
			8,5x20	11	Nitro Demon	38	45	14	3808,-		B,C
			8,5x20	36	Image Colt	35	45	20	3432,-		B
			8,5x20	92	Image Colt L.Gun	35	45	20	3276,-		B
AUDI			PCD: **5-112** Bolt - Mutter: **14x1,50B** CB: **66,5**								
A4 (B8) allroad	05.09-04.16	17-21	7,5x17	26	CSP 18 G.Blk/pol	27	28	2	2272,-		D
A4 (B9) allroad	05.16-	17-21	7,5x17	27	CSP 18	27	28	2	2200,-		D
A5 (B8) cab	05.09-10.16	17-20	7,5x17	28	CSP 18 G.Blk	27	28	2	2200,-		D
A5 (B8) coupe	06.07-06.16	17-20	7,5x17	46	Image Stella	27	28	2	1812,-		D
A5 (B8) sportback	07.09-11.16	17-20	7,5x17	47	Image Stella M.Blk	27	28	2	1812,-		D
A5 (B9) cab	11.16-	17-21	7,5x17	50	Image Legend	27	28	2	1812,-		D
A5 (B9) coupe	07.16-	17-21	8x17	17	BM Drive M.Gun	25	28	6	1736,-		D
A5 (B9) sportback	12.16-	17-21	8x18	2	Nitro Sapphire FF	30	28	-4	4036,-		C,D
S5 (B8) cab	08.09-10.16	18-20	8x18	16	Advanti Inizio DST	30	28	-4	3828,-		D
S5 (B8) coupe	06.07-06.16	18-20	8x18	17	BM Drive M.Gun	25	28	6	2296,-		D
S5 (B8) sportback	02.10-11.16	18-20	8x18	20	ATS Antares	31	28	-6	3056,-	**OE-fit**	B,C,D
S5 (B9) cab	11.16-	18-21	8x18	21	ATS Antares G.Blk	31	28	-6	3136,-	**OE-fit**	B,C,D
S5 (B9) coupe	07.16-	18-21	8x18	26	CSP 18 G.Blk/pol	30	28	-4	2956,-		D
S5 (B9) sportback	12.16-	18-21	8x18	27	CSP 18	30	28	-4	2972,-		D
			8x18	28	CSP 18 G.Blk	30	28	-4	2972,-		D
			8x18	46	Image Stella	30	28	-4	2276,-		D
			8x18	47	Image Stella M.Blk	30	28	-4	2276,-		D
			8x18	50	Image Legend	25	28	6	2276,-	**OE-fit**	B,D
			8,5x18	2	Nitro Sapphire FF	27	28	2	4036,-	**OE-fit**	B,C,D
			8x19	2	Nitro Sapphire FF	30	28	-4	4684,-		C,D
			8x19	3	Nitro Turismo FF	18	28	20	4492,-		D
			8x19	4	Nitro Turismo FF G.Gun/Pol	18	28	20	4644,-		D
			8x19	16	Advanti Inizio DST	30	28	-4	4412,-		D
			8x19	26	CSP 18 G.Blk/pol	30	28	-4	3596,-		D
			8x19	27	CSP 18	30	28	-4	3444,-		D
			8x19	28	CSP 18 G.Blk	30	28	-4	3444,-		D
			8,5x19	2	Nitro Sapphire FF	27	28	2	4684,-	**OE-fit**	B,C,D
			8,5x19	5	Nitro Volcano G.Gun	25	28	6	4388,-	**OE-fit**	B,C,D
			8,5x19	6	Nitro Volcano	25	28	6	4632,-	**OE-fit**	B,C,D
			9x19	10	Nitro Demon H.Slv	28	28	0	3624,-	**OE-fit**	B,C,D
			9x19	11	Nitro Demon	28	28	0	3376,-	**OE-fit**	B,C,D
			9x19	12	Nitro Edge M.Blk	25	28	6	3884,-		D
			9,5x19	5	Nitro Volcano G.Gun	25	28	6	4388,-	**OE-fit**, kun bak	B,C,D,M
			9,5x19	6	Nitro Volcano	25	28	6	4632,-	**OE-fit**, kun bak	B,C,D,M
			8,5x20	1	Nitro Throne FF	20	28	16	5060,-		D
			8,5x20	2	Nitro Sapphire FF	30	28	-4	5216,-		C,D
			8,5x20	11	Nitro Demon	25	28	6	3808,-	**OE-fit**	B,C,D
			8,5x20	24	ATS Mizar	29	28	-2	5948,-		D
			8,5x20	25	ATS Mizar G.Blk	29	28	-2	6020,-		D
			9x20	2	Nitro Sapphire FF	30	28	-4	5216,-	**OE-fit**	B,C,D
			9x20	3	Nitro Turismo FF	30	28	-4	4960,-		D
			9x20	4	Nitro Turismo FF G.Gun/Pol	30	28	-4	5048,-		D
			9x20	5	Nitro Volcano G.Gun	25	28	6	4824,-	**OE-fit**	B,C,D
			9x20	6	Nitro Volcano	25	28	6	5164,-	**OE-fit**	B,C,D
			9x20	10	Nitro Demon H.Slv	30	28	-4	4104,-	**OE-fit**	B,C,D
			9x20	11	Nitro Demon	30	28	-4	3808,-	**OE-fit**	B,C,D
			9x20	12	Nitro Edge M.Blk	25	28	6	4220,-		D
			9x20	15	Nitro Magnum	28	28	0	4572,-		D
			9,5x20	3	Nitro Turismo FF	30	28	-4	4960,-		D,M
			9,5x20	4	Nitro Turismo FF G.Gun/Pol	30	28	-4	5048,-		D,M
			9,5x20	10	Nitro Demon H.Slv	30	28	-4	4104,-	**OE-fit**, kun bak	B,C,D,M
			9,5x20	11	Nitro Demon	30	28	-4	3808,-	**OE-fit**, kun bak	B,C,D,M
			10x20	3	Nitro Turismo FF	25	28	6	5116,-	Kun bak	D,M
			10x20	4	Nitro Turismo FF G.Gun/Pol	25	28	6	5288,-	Kun bak	D,M

Forts. neste side »

Bilmerke - Bilmodell	Årsmodell	Dimensjon	Felgdim.	Bilde	Felgmodell	ET Felg	ET Bil	Avvik ET	Veil. Pris eks. MVA	Merknader	B,C D, M
AUDI (forts.)				PCD: **5-112** Bolt - Mutter: **14x1,50B**		CB: **66,5**					
			10x20	12	Nitro Edge M.Blk	30	28	-4	4220,-	Kun bak	D,M
			10,5x20	5	Nitro Volcano G.Gun	30	28	-4	4824,-	**OE-fit**, kun bak	B,C,D,M
			10,5x20	6	Nitro Volcano	30	28	-4	5164,-	**OE-fit**, kun bak	B,C,D,M
			9x21	5	Nitro Volcano G.Gun	25	28	6	5540,-	**OE-fit**	B,C,D
			9x21	6	Nitro Volcano	25	28	6	5996,-	**OE-fit**	B,C,D
			10,5x21	5	Nitro Volcano G.Gun	30	28	-4	5540,-	**OE-fit**, kun bak	B,C,D,M
			10,5x21	6	Nitro Volcano	30	28	-4	5996,-	**OE-fit**, kun bak	B,C,D,M
			10x22	12	Nitro Edge M.Blk	30	28	-4	4888,-	Kun bak	D,M
AUDI				PCD: **5-112** Bolt - Mutter: **14x1,50B**		CB: **57,1**					
A6 (4B) 2.7T, 3.0	02.98-04.04	16-20	8x17	9	Nitro Sabre G.Blk	35	40	10	3108,-		B,C
A6 (4B) 4.2	02.98-04.04	17-20	8x18	7	Nitro Spark G.Blk/Grey	35	40	10	3476,-		
A8 (4E)	11.02-02.10	17-22	8x18	9	Nitro Sabre G.Blk	35	40	10	3496,-		B,C
W12 18"			8x18	10	Nitro Demon H.Slv	35	40	10	2972,-		B,C
A8 (D2)	02.94-10.02	16-20	8x18	11	Nitro Demon	35	40	10	2784,-		B,C
S4 (8E)	06.03-01.09	17-20	8x18	16	Advanti Inizio DST	30	40	20	3828,-		
S4 (B5)	12.94-09.01	16-20	8x18	17	BM Drive M.Gun	35	40	10	2296,-		B
S6 (4B)	09.99-04.04	17-20	8x18	48	Image Motion	35	40	10	2204,-		B
S6 (C4)	07.94-12.97	16-20	8x18	49	Image Motion G.Gun	35	40	10	2204,-		B
S8 (D2)	02.96-10.02	17-20	8x18	50	Image Legend	35	40	10	2276,-		B
			8,5x18	16	Advanti Inizio DST	35	40	10	3828,-		B
			8x19	10	Nitro Demon H.Slv	35	40	10	3624,-		B,C
			8x19	11	Nitro Demon	35	40	10	3376,-		B,C
			8x19	16	Advanti Inizio DST	30	40	20	4412,-		
			8x19	48	Image Motion	35	40	10	2532,-		B
			8x19	49	Image Motion G.Gun	35	40	10	2532,-		B
			8,5x19	9	Nitro Sabre G.Blk	35	40	10	4292,-		B,C
			8,5x19	16	Advanti Inizio DST	35	40	10	4412,-		B
			8,5x20	7	Nitro Spark G.Blk/Grey	35	40	10	4660,-		
			8,5x20	9	Nitro Sabre G.Blk	35	40	10	4800,-		B,C
			8,5x20	10	Nitro Demon H.Slv	38	40	4	4104,-		B,C
			8,5x20	11	Nitro Demon	38	40	4	3808,-		B,C
AUDI				PCD: **5-112** Bolt - Mutter: **14x1,50B**		CB: **66,5**					
A7 (4G) sportback	10.10-02.18	17-22	7,5x17	20	ATS Antares	37	28	-18	2264,-	**OE-fit**	B,C,D
A8 (4H)	03.10-10.17	17-22	7,5x17	21	ATS Antares G.Blk	37	28	-18	2380,-	**OE-fit**	B,C,D
3.0TDI, 3.0TFSI 18"			7,5x17	26	CSP 18 G.Blk/pol	27	28	2	2272,-		D
4.2, 4.2TDI 18"			7,5x17	27	CSP 18	27	28	2	2200,-		D
			7,5x17	28	CSP 18 G.Blk	27	28	2	2200,-		D
			7,5x17	46	Image Stella	27	28	2	1812,-		D
			7,5x17	47	Image Stella M.Blk	27	28	2	1812,-		D
			7,5x17	50	Image Legend	27	28	2	1812,-		D
			8x17	17	BM Drive M.Gun	25	28	6	1736,-		D
			8x18	2	Nitro Sapphire FF	30	28	-4	4036,-		C,D
			8x18	16	Advanti Inizio DST	30	28	-4	3828,-		D
			8x18	17	BM Drive M.Gun	25	28	6	2296,-		D
			8x18	20	ATS Antares	31	28	-6	3056,-	**OE-fit**	B,C,D
			8x18	21	ATS Antares G.Blk	31	28	-6	3136,-	**OE-fit**	B,C,D
			8x18	26	CSP 18 G.Blk/pol	30	28	-4	2956,-		D
			8x18	27	CSP 18	30	28	-4	2972,-		D
			8x18	28	CSP 18 G.Blk	30	28	-4	2972,-		D
			8x18	46	Image Stella	30	28	-4	2276,-		D
			8x18	47	Image Stella M.Blk	30	28	-4	2276,-		D
			8x18	50	Image Legend	25	28	6	2276,-	**OE-fit**	B,D
			8,5x18	2	Nitro Sapphire FF	27	28	2	4036,-	**OE-fit**	B,C,D
			8x19	2	Nitro Sapphire FF	30	28	-4	4684,-		C,D
			8x19	3	Nitro Turismo FF	18	28	20	4492,-		D
			8x19	4	Nitro Turismo FF G.Gun/Pol	18	28	20	4644,-		D
			8x19	16	Advanti Inizio DST	30	28	-4	4412,-		D
			8x19	26	CSP 18 G.Blk/pol	30	28	-4	3596,-		D
			8x19	27	CSP 18	30	28	-4	3444,-		D
			8x19	28	CSP 18 G.Blk	30	28	-4	3444,-		D
			8,5x19	2	Nitro Sapphire FF	27	28	2	4684,-	**OE-fit**	B,C,D
			8,5x19	5	Nitro Volcano G.Gun	25	28	6	4388,-	**OE-fit**	B,C,D
			8,5x19	6	Nitro Volcano	25	28	6	4632,-	**OE-fit**	B,C,D
			9x19	10	Nitro Demon H.Slv	28	28	0	3624,-	**OE-fit**	B,C,D
			9x19	11	Nitro Demon	28	28	0	3376,-	**OE-fit**	B,C,D
			9x19	12	Nitro Edge M.Blk	25	28	6	3884,-		D
			9,5x19	5	Nitro Volcano G.Gun	25	28	6	4388,-	**OE-fit**, kun bak	B,C,D
			9,5x19	6	Nitro Volcano	25	28	6	4632,-	**OE-fit**, kun bak	B,C,D,M
			8,5x20	1	Nitro Throne FF	20	28	16	5060,-		D
			8,5x20	2	Nitro Sapphire FF	30	28	-4	5216,-		C,D
			8,5x20	11	Nitro Demon	25	28	6	3808,-	**OE-fit**	B,C,D
			8,5x20	24	ATS Mizar	29	28	-2	5948,-		D
			8,5x20	25	ATS Mizar G.Blk	29	28	-2	6020,-		D
			9x20	2	Nitro Sapphire FF	30	28	-4	5216,-	**OE-fit**	B,C,D
			9x20	3	Nitro Turismo FF	30	28	-4	4960,-		D
			9x20	4	Nitro Turismo FF G.Gun/Pol	30	28	-4	5048,-		D
			9x20	5	Nitro Volcano G.Gun	25	28	6	4824,-	**OE-fit**	B,C,D
			9x20	6	Nitro Volcano	25	28	6	5164,-	**OE-fit**	B,C,D
			9x20	10	Nitro Demon H.Slv	30	28	-4	4104,-	**OE-fit**	B,C,D
			9x20	11	Nitro Demon	30	28	-4	3808,-	**OE-fit**	B,C,D
			9x20	12	Nitro Edge M.Blk	25	28	6	4220,-		D
			9x20	15	Nitro Magnum	28	28	0	4572,-		D
			9,5x20	3	Nitro Turismo FF	30	28	-4	4960,-		D,M
			9,5x20	4	Nitro Turismo FF G.Gun/Pol	30	28	-4	5048,-		D,M
			9,5x20	10	Nitro Demon H.Slv	30	28	-4	4104,-	**OE-fit**	B,C,D,M
			9,5x20	11	Nitro Demon	30	28	-4	3808,-	**OE-fit**	B,C,D,M

Forts. neste side »

Bilmerke - Bilmodell	Årsmodell	Dimensjon	Felgdim.	Bilde	Felgmodell	ET Felg	ET Bil	Avvik ET	Veil. Pris eks. MVA	Merknader	B,C D, M
AUDI (forts.)			PCD: **5-112** Bolt - Mutter: **14x1,50B** CB: **66,5**								
			10x20	3	Nitro Turismo FF	25	28	6	5116,-	Kun bak	D,M
			10x20	4	Nitro Turismo FF G.Gun/Pol	25	28	6	5288,-	Kun bak	D,M
			10x20	12	Nitro Edge M.Blk	30	28	-4	4220,-	Kun bak	D,M
			10,5x20	5	Nitro Volcano G.Gun	30	28	-4	4824,-	**OE-fit**, kun bak	B,C,D,M
			10,5x20	6	Nitro Volcano	30	28	-4	5164,-	**OE-fit**, kun bak	B,C,D,M
			9x21	5	Nitro Volcano G.Gun	25	28	6	5540,-	**OE-fit**	B,C,D
			9x21	6	Nitro Volcano	25	28	6	5996,-	**OE-fit**	B,C,D
			9x21	24	ATS Mizar	37	28	-18	8276,-		D
			9x21	25	ATS Mizar G.Blk	37	28	-18	8352,-		D
			10x21	24	ATS Mizar	30	28	-4	9016,-		D,M
			10x21	25	ATS Mizar G.Blk	30	28	-4	9156,-		D,M
			10,5x21	5	Nitro Volcano G.Gun	30	28	-4	5540,-	**OE-fit**, kun bak	B,C,D,M
			10,5x21	6	Nitro Volcano	30	28	-4	5996,-	**OE-fit**, kun bak	B,C,D,M
			9x22	15	Nitro Magnum	28	28	0	5420,-		D
			9,5x22	1	Nitro Throne FF	25	28	6	6276,-		D,M
			10x22	12	Nitro Edge M.Blk	30	28	-4	4888,-	Kun bak	D,M
			10,5x22	15	Nitro Magnum	30	28	-4	5420,-	Kun bak	D,M
AUDI			PCD: **5-112** Bolt - Mutter: **14x1,50B** CB: **66,5**								
A7 (F2) sportback	03.18-	18-22	8x18	2	Nitro Sapphire FF	30	30	0	4036,-		C,D
			8x18	16	Advanti Inizio DST	30	30	0	3828,-		D
			8x18	17	BM Drive M.Gun	25	30	10	2296,-	**OE-fit**	B,D
			8x18	26	CSP 18 G.Blk/pol	30	30	0	2956,-		D
			8x18	27	CSP 18	30	30	0	2972,-		D
			8x18	28	CSP 18 G.Blk	30	30	0	2972,-		D
			8x18	46	Image Stella	30	30	0	2276,-		D
			8x18	47	Image Stella M.Blk	30	30	0	2276,-		D
			8x18	50	Image Legend	25	30	10	2276,-	**OE-fit**	B,D
			8,5x18	2	Nitro Sapphire FF	27	30	6	4036,-	**OE-fit**	B,C,D
			8x19	2	Nitro Sapphire FF	30	30	0	4684,-		C,D
			8x19	3	Nitro Turismo FF	30	30	0	4492,-		D
			8x19	4	Nitro Turismo FF G.Gun/Pol	30	30	0	4644,-		D
			8x19	16	Advanti Inizio DST	30	30	0	4412,-		D
			8x19	26	CSP 18 G.Blk/pol	30	30	0	3596,-		D
			8x19	27	CSP 18	30	30	0	3444,-		D
			8x19	28	CSP 18 G.Blk	30	30	0	3444,-		D
			8,5x19	2	Nitro Sapphire FF	27	30	6	4684,-	**OE-fit**	B,C,D
			8,5x19	5	Nitro Volcano G.Gun	25	30	10	4388,-	**OE-fit**	B,C,D
			8,5x19	6	Nitro Volcano	25	30	10	4632,-	**OE-fit**	B,C,D
			9x19	3	Nitro Turismo FF	20	30	20	4660,-		D,M
			9x19	4	Nitro Turismo FF G.Gun/Pol	20	30	20	4812,-		D
			9,5x19	3	Nitro Turismo FF	25	30	10	4660,-		D,M
			9,5x19	4	Nitro Turismo FF G.Gun/Pol	25	30	10	4812,-		D,M
			8,5x20	1	Nitro Throne FF	30	30	0	5060,-		D
			8,5x20	2	Nitro Sapphire FF	30	30	0	5216,-		C,D
			8,5x20	11	Nitro Demon	25	30	10	3808,-	**OE-fit**	B,C,D
			9x20	2	Nitro Sapphire FF	30	30	0	5216,-	**OE-fit**	B,C,D
			9x20	3	Nitro Turismo FF	30	30	0	4960,-		D
			9x20	4	Nitro Turismo FF G.Gun/Pol	30	30	0	5048,-		D
			9x20	5	Nitro Volcano G.Gun	25	30	10	4824,-	**OE-fit**	B,C,D
			9x20	6	Nitro Volcano	25	30	10	5164,-	**OE-fit**	B,C,D
			9x20	10	Nitro Demon H.Slv	30	30	0	4104,-	**OE-fit**	B,C,D
			9x20	11	Nitro Demon	30	30	0	3808,-	**OE-fit**	B,C,D
			9x20	12	Nitro Edge M.Blk	25	30	10	4220,-	**OE-fit**	B,D
			9,5x20	3	Nitro Turismo FF	25	30	10	4960,-		D,M
			9,5x20	4	Nitro Turismo FF G.Gun/Pol	25	30	10	5048,-		D,M
			9,5x20	10	Nitro Demon H.Slv	30	30	0	4104,-	**OE-fit**	B,D,M
			9,5x20	11	Nitro Demon	30	30	0	3808,-	**OE-fit**	B,D,M
			10x20	3	Nitro Turismo FF	25	30	10	5116,-		D,M
			10x20	4	Nitro Turismo FF G.Gun/Pol	25	30	10	5288,-		D,M
			9x21	5	Nitro Volcano G.Gun	25	30	10	5540,-	**OE-fit**	B,C,D
			9x21	6	Nitro Volcano	25	30	10	5996,-	**OE-fit**	B,C,D
			10,5x21	5	Nitro Volcano G.Gun	30	30	0	5540,-	**OE-fit**, kun bak	B,C,D,M
			10,5x21	6	Nitro Volcano	30	30	0	5996,-	**OE-fit**, kun bak	B,C,D,M
			9,5x22	1	Nitro Throne FF	25	30	10	6276,-		D,M
AUDI			PCD: **5-112** Bolt - Mutter: **14x1,50B** CB: **66,5**								
A8 (F8)	11.17-	17-22	7,5x17	46	Image Stella	27	29	4	1812,-		D
55 TFSI 18"			7,5x17	47	Image Stella M.Blk	27	29	4	1812,-		D
			8x17	17	BM Drive M.Gun	25	29	8	1736,-	**OE-fit**	B,D
			8x18	2	Nitro Sapphire FF	30	29	-2	4036,-		C,D
			8x18	16	Advanti Inizio DST	30	29	-2	3828,-		D
			8x18	17	BM Drive M.Gun	25	29	8	2296,-	**OE-fit**	B,D
			8x18	26	CSP 18 G.Blk/pol	30	29	-2	2956,-		D
			8x18	27	CSP 18	30	29	-2	2972,-		D
			8x18	28	CSP 18 G.Blk	30	29	-2	2972,-		D
			8x18	46	Image Stella	30	29	-2	2276,-		D
			8x18	47	Image Stella M.Blk	30	29	-2	2276,-		D
			8x18	50	Image Legend	25	29	8	2276,-	**OE-fit**	B,D
			8,5x18	2	Nitro Sapphire FF	27	29	4	4036,-	**OE-fit**	B,C,D
			8x19	2	Nitro Sapphire FF	30	29	-2	4684,-		C,D
			8x19	3	Nitro Turismo FF	30	29	-2	4492,-		D
			8x19	4	Nitro Turismo FF G.Gun/Pol	30	29	-2	4644,-		D
			8x19	16	Advanti Inizio DST	30	29	-2	4412,-		D
			8x19	26	CSP 18 G.Blk/pol	30	29	-2	3596,-		D
			8x19	27	CSP 18	30	29	-2	3444,-		D
			8x19	28	CSP 18 G.Blk	30	29	-2	3444,-		D
			8,5x19	2	Nitro Sapphire FF	27	29	4	4684,-	**OE-fit**	B,C,D

Forts. neste side »

Bilmerke - Bilmodell	Årsmodell	Dimensjon	Felgdim.	Bilde	Felgmodell	ET Felg	ET Bil	Avvik ET	Veil. Pris eks. MVA	Merknader	B,C D, M
AUDI (forts.)				PCD: **5-112** Bolt - Mutter: **14x1,50B**		CB: **66,5**					
			8,5x19	5	Nitro Volcano G.Gun	25	29	8	4388,-	**OE-fit**	B,C,D
			8,5x19	6	Nitro Volcano	25	29	8	4632,-	**OE-fit**	B,C,D
			9x19	3	Nitro Turismo FF	20	29	18	4660,-		D,M
			9x19	4	Nitro Turismo FF G.Gun/Pol	20	29	18	4812,-		D
			9x19	10	Nitro Demon H.Slv	28	29	2	3624,-	**OE-fit**	B,D,M
			9x19	11	Nitro Demon	28	29	2	3376,-	**OE-fit**	B,D,M
			9,5x19	3	Nitro Turismo FF	25	29	8	4660,-		D,M
			9,5x19	4	Nitro Turismo FF G.Gun/Pol	25	29	8	4812,-		D,M
			8,5x20	1	Nitro Throne FF	30	29	-2	5060,-		D
			8,5x20	2	Nitro Sapphire FF	30	29	-2	5216,-		C,D
			8,5x20	11	Nitro Demon	25	29	8	3808,-	**OE-fit**	B,D
			9x20	2	Nitro Sapphire FF	30	29	-2	5216,-	**OE-fit**	B,C,D
			9x20	3	Nitro Turismo FF	30	29	-2	4960,-		D
			9x20	4	Nitro Turismo FF G.Gun/Pol	30	29	-2	5048,-		D
			9x20	5	Nitro Volcano G.Gun	32	29	-6	4824,-	**OE-fit**	B,C,D
			9x20	6	Nitro Volcano	32	29	-6	5164,-	**OE-fit**	B,C,D
			9x20	10	Nitro Demon H.Slv	30	29	-2	4104,-	**OE-fit**	B,D
			9x20	11	Nitro Demon	30	29	-2	3808,-	**OE-fit**	B,D
			9x20	12	Nitro Edge M.Blk	25	29	8	4220,-	**OE-fit**	B,D,M
			9x20	15	Nitro Magnum	35	29	-12	4572,-		D
			9,5x20	3	Nitro Turismo FF	25	29	8	4960,-		D,M
			9,5x20	4	Nitro Turismo FF G.Gun/Pol	25	29	8	5048,-		D,M
			9,5x20	10	Nitro Demon H.Slv	30	29	-2	4104,-	**OE-fit**	B,C,D
			9,5x20	11	Nitro Demon	30	29	-2	3808,-	**OE-fit**	B,C,D
			10x20	3	Nitro Turismo FF	25	29	8	5116,-		D,M
			10x20	4	Nitro Turismo FF G.Gun/Pol	25	29	8	5288,-		D,M
			10,5x20	5	Nitro Volcano G.Gun	30	29	-2	4824,-	**OE-fit**, kun bak	B,C,D,M
			10,5x20	6	Nitro Volcano	30	29	-2	5164,-	**OE-fit**, kun bak	B,C,D,M
			9x21	5	Nitro Volcano G.Gun	32	29	-6	5540,-	**OE-fit**	B,C,D
			9x21	6	Nitro Volcano	32	29	-6	5996,-	**OE-fit**	B,C,D
			9x21	24	ATS Mizar	37	29	-16	8276,-	**OE-fit**	B,D
			9x21	25	ATS Mizar G.Blk	37	29	-16	8352,-	**OE-fit**	B,D
			10,5x21	5	Nitro Volcano G.Gun	30	29	-2	5540,-	**OE-fit**, kun bak	B,C,D,M
			10,5x21	6	Nitro Volcano	30	29	-2	5996,-	**OE-fit**, kun bak	B,C,D,M
			9x22	15	Nitro Magnum	35	29	-12	5420,-		D
			9,5x22	1	Nitro Throne FF	25	29	8	6276,-		D,M
AUDI				PCD: **5-112** Bolt - Mutter: **14x1,50B**		CB: **57,1**					
RS4 (B5) avant	05.00-09.01	18-20	8x19	3	Nitro Turismo FF	18	20	4	4492,-		
			8x19	4	Nitro Turismo FF G.Gun/Pol	18	20	4	4644,-		
			8,5x19	2	Nitro Sapphire FF	20	20	0	4684,-		B,C
			8,5x20	1	Nitro Throne FF	20	20	0	5060,-		
			9x20	2	Nitro Sapphire FF	20	20	0	5216,-		B,C
AUDI				PCD: **5-112** Bolt - Mutter: **14x1,50B**		CB: **57,1**					
RS4 (QB6)	09.05-02.09	18-20	8x18	17	BM Drive M.Gun	25	24	-2	2296,-		
			8x19	3	Nitro Turismo FF	18	24	12	4492,-		
			8x19	4	Nitro Turismo FF G.Gun/Pol	18	24	12	4644,-		
			8,5x19	2	Nitro Sapphire FF	20	24	8	4684,-		B,C
			9x19	3	Nitro Turismo FF	20	24	8	4660,-		
			9x19	4	Nitro Turismo FF G.Gun/Pol	20	24	8	4812,-		
			8,5x20	1	Nitro Throne FF	20	24	8	5060,-		
			9x20	2	Nitro Sapphire FF	20	24	8	5216,-		B,C
			9,5x20	3	Nitro Turismo FF	20	24	8	4960,-		
			9,5x20	4	Nitro Turismo FF G.Gun/Pol	20	24	8	5048,-		
AUDI				PCD: **5-112** Bolt - Mutter: **14x1,50B**		CB: **66,5**					
RS4 (B8) avant	05.12-06.15	19-21	8,5x19	2	Nitro Sapphire FF	20	26	12	4684,-	**OE-fit**	B,C,D
			9x19	3	Nitro Turismo FF	20	26	12	4660,-		D
			9x19	4	Nitro Turismo FF G.Gun/Pol	20	26	12	4812,-		D
			8,5x20	1	Nitro Throne FF	20	26	12	5060,-		D
			9x20	2	Nitro Sapphire FF	20	26	12	5216,-	**OE-fit**	B,C,D
			9x20	5	Nitro Volcano G.Gun	25	26	2	4824,-	**OE-fit**	B,C,D
			9x20	6	Nitro Volcano	25	26	2	5164,-	**OE-fit**	B,C,D
			9,5x20	3	Nitro Turismo FF	20	26	12	4960,-		D
			9,5x20	4	Nitro Turismo FF G.Gun/Pol	20	26	12	5048,-		D
			9x21	5	Nitro Volcano G.Gun	25	26	2	5540,-	**OE-fit**	B,C,D
			9x21	6	Nitro Volcano	25	26	2	5996,-	**OE-fit**	B,C,D
AUDI				PCD: **5-112** Bolt - Mutter: **14x1,50B**		CB: **66,5**					
RS4 (B9)	11.17-	19-21	8,5x19	2	Nitro Sapphire FF	20	26	12	4684,-	**OE-fit**	B,C,D
(Biler med keramiska bremser			9x19	3	Nitro Turismo FF	20	26	12	4660,-		D
krever 20")			9x19	4	Nitro Turismo FF G.Gun/Pol	20	26	12	4812,-		D
			9,5x19	3	Nitro Turismo FF	25	26	2	4660,-		D
			9,5x19	4	Nitro Turismo FF G.Gun/Pol	25	26	2	4812,-		D
			8,5x20	1	Nitro Throne FF	20	26	12	5060,-		D
			9x20	2	Nitro Sapphire FF	20	26	12	5216,-	**OE-fit**	B,C,D
			9x20	5	Nitro Volcano G.Gun	25	26	2	4824,-	**OE-fit**	B,C,D
			9x20	6	Nitro Volcano	25	26	2	5164,-	**OE-fit**	B,C,D
			9,5x20	3	Nitro Turismo FF	20	26	12	4960,-		D
			9,5x20	4	Nitro Turismo FF G.Gun/Pol	20	26	12	5048,-		D
			10x20	3	Nitro Turismo FF	19	26	14	5116,-		D,M
			10x20	4	Nitro Turismo FF G.Gun/Pol	19	26	14	5288,-		D,M
			9x21	5	Nitro Volcano G.Gun	25	26	2	5540,-	**OE-fit**	B,C,D
			9x21	6	Nitro Volcano	25	26	2	5996,-	**OE-fit**	B,C,D

Bilmerke - Bilmodell	Årsmodell	Dimensjon	Felgdim.	Bilde	Felgmodell	ET Felg	ET Bil	Avvik ET	Veil. Pris eks. MVA	Merknader	B,C D, M
AUDI			PCD: **5-112** Bolt - Mutter: **14x1,50B** CB: **66,5**								
RS5 (B8)	06.10-05.17	19-21	8,5x19	2	Nitro Sapphire FF	20	24	8	4684,-	**OE-fit**	B,C,D
(Keramiska bremser spør oss!)			9x19	3	Nitro Turismo FF	20	24	8	4660,-		D
RS5 (B8)	06.17-	19-21	9x19	4	Nitro Turismo FF G.Gun/Pol	20	24	8	4812,-		D
			9x20	2	Nitro Sapphire FF	20	24	8	5216,-	**OE-fit**	B,C,D
			9,5x20	3	Nitro Turismo FF	20	24	8	4960,-		D
			9,5x20	4	Nitro Turismo FF G.Gun/Pol	20	24	8	5048,-		D
			10x20	3	Nitro Turismo FF	19	24	10	5116,-		D,M
			10x20	4	Nitro Turismo FF G.Gun/Pol	19	24	10	5288,-		D,M
AUDI			PCD: **5-112** Bolt - Mutter: **14x1,50B** CB: **57,1**								
S6 (4F)	08.06-04.11	18-20	8x18	10	Nitro Demon H.Slv	35	46	22	2972,-		B,C
(Keramiska bremser spør oss!)			8x18	11	Nitro Demon	35	46	22	2784,-		B,C
			8x18	17	BM Drive M.Gun	35	46	22	2296,-		B
			8x18	46	Image Stella	40	46	12	2276,-	**OE-fit**	B,D
			8x18	47	Image Stella M.Blk	40	46	12	2276,-	**OE-fit**	B,D
			8x18	48	Image Motion	35	46	22	2204,-		B
			8x18	49	Image Motion G.Gun	35	46	22	2204,-		B
			8x19	10	Nitro Demon H.Slv	35	46	22	3624,-		B,C
			8x19	11	Nitro Demon	35	46	22	3376,-		B,C
			8x19	48	Image Motion	35	46	22	2532,-		B
			8x19	49	Image Motion G.Gun	35	46	22	2532,-		B
			8,5x19	2	Nitro Sapphire FF	40	46	12	4684,-		B,C
			8,5x19	3	Nitro Turismo FF	35	46	22	4492,-		
			8,5x19	4	Nitro Turismo FF G.Gun/Pol	35	46	22	4644,-		
			8,5x20	2	Nitro Sapphire FF	40	46	12	5216,-		B,C
			8,5x20	3	Nitro Turismo FF	35	46	22	4812,-		
			8,5x20	4	Nitro Turismo FF G.Gun/Pol	35	46	22	4964,-		
			8,5x20	10	Nitro Demon H.Slv	38	46	16	4104,-		B,C
			8,5x20	11	Nitro Demon	38	46	16	3808,-		B,C
			9x20	2	Nitro Sapphire FF	38	46	16	5216,-		B,C
			9x20	5	Nitro Volcano G.Gun	40	46	12	4824,-		B,C
			9x20	6	Nitro Volcano	40	46	12	5164,-		B,C
			9x20	10	Nitro Demon H.Slv	40	46	12	4104,-		B,C
			9x20	11	Nitro Demon	40	46	12	3808,-		B,C
			9x21	5	Nitro Volcano G.Gun	40	46	12	5540,-		B,C
			9x21	6	Nitro Volcano	40	46	12	5996,-		B,C
AUDI			PCD: **5-112** Bolt - Mutter: **14x1,50B** CB: **66,5**								
S6 (4G)	12.11-04.19	19-21	8x19	3	Nitro Turismo FF	30	45	30	4492,-		D
(Keramiska bremser spør oss!)			8x19	4	Nitro Turismo FF G.Gun/Pol	30	45	30	4644,-		D
			8x19	24	ATS Mizar	38	45	14	3720,-		D
			8x19	25	ATS Mizar G.Blk	38	45	14	3868,-		D
			8,5x19	2	Nitro Sapphire FF	40	45	10	4684,-	**OE-fit**	B,C,D
			8,5x19	3	Nitro Turismo FF	35	45	20	4492,-		D
			8,5x19	4	Nitro Turismo FF G.Gun/Pol	35	45	20	4644,-		D
			8,5x19	5	Nitro Volcano G.Gun	32	45	26	4388,-	**OE-fit**	B,C,D
			8,5x19	6	Nitro Volcano	32	45	26	4632,-	**OE-fit**	B,C,D
			8,5x20	2	Nitro Sapphire FF	40	45	10	5216,-	**OE-fit**	B,C,D
			8,5x20	3	Nitro Turismo FF	35	45	20	4812,-		D
			8,5x20	4	Nitro Turismo FF G.Gun/Pol	35	45	20	4964,-		D
			8,5x20	24	ATS Mizar	40	45	10	5948,-		D
			8,5x20	25	ATS Mizar G.Blk	40	45	10	6020,-		D
			9x20	2	Nitro Sapphire FF	38	45	14	5216,-	**OE-fit**	B,C,D
			9x20	5	Nitro Volcano G.Gun	32	45	26	4824,-	**OE-fit**	B,C,D
			9x20	6	Nitro Volcano	32	45	26	5164,-	**OE-fit**	B,C,D
			9x21	5	Nitro Volcano G.Gun	32	45	26	5540,-	**OE-fit**	B,C,D
			9x21	6	Nitro Volcano	32	45	26	5996,-	**OE-fit**	B,C,D
			9x21	24	ATS Mizar	37	45	16	8276,-		D
			9x21	25	ATS Mizar G.Blk	37	45	16	8352,-		D
			9,5x21	5	Nitro Volcano G.Gun	40	45	10	5540,-	**OE-fit**	B,C,D
			9,5x21	6	Nitro Volcano	40	45	10	5996,-		D
AUDI			PCD: **5-112** Bolt - Mutter: **14x1,50B** CB: **66,5**								
S6 (F2)	06.19-	19-22	8x19	10	Nitro Demon H.Slv	35	43	16	3624,-	**OE-fit**	B,C,D
			8x19	11	Nitro Demon	35	43	16	3376,-	**OE-fit**	B,C,D
			8x19	48	Image Motion	35	43	16	2532,-	**OE-fit**	B,D
			8x19	49	Image Motion G.Gun	35	43	16	2532,-	**OE-fit**	B,D
			8,5x19	2	Nitro Sapphire FF	40	43	6	4684,-	**OE-fit**	B,C,D
			8,5x19	3	Nitro Turismo FF	35	43	16	4492,-		D
			8,5x19	4	Nitro Turismo FF G.Gun/Pol	35	43	16	4644,-		D
			8,5x20	2	Nitro Sapphire FF	40	43	6	5216,-	**OE-fit**	B,C,D
			8,5x20	3	Nitro Turismo FF	35	43	16	4812,-		D
			8,5x20	4	Nitro Turismo FF G.Gun/Pol	35	43	16	4964,-		D
			8,5x20	10	Nitro Demon H.Slv	38	43	10	4104,-	**OE-fit**	B,C,D
			8,5x20	11	Nitro Demon	38	43	10	3808,-	**OE-fit**	B,C,D
			9x20	2	Nitro Sapphire FF	38	43	10	5216,-	**OE-fit**	B,C,D
			9x20	5	Nitro Volcano G.Gun	40	43	6	4824,-	**OE-fit**	B,C,D
			9x20	6	Nitro Volcano	40	43	6	5164,-	**OE-fit**	B,C,D
			9x20	10	Nitro Demon H.Slv	40	43	6	4104,-	**OE-fit**	B,C,D
			9x20	11	Nitro Demon	40	43	6	3808,-	**OE-fit**	B,C,D
			9,5x20	5	Nitro Volcano G.Gun	40	43	6	4824,-	**OE-fit**	B,C,D,M
			9,5x20	6	Nitro Volcano	40	43	6	5164,-	**OE-fit**	B,C,D,M
			9x21	5	Nitro Volcano G.Gun	40	43	6	5540,-	**OE-fit**	B,C,D
			9x21	6	Nitro Volcano	40	43	6	5996,-	**OE-fit**	B,C,D
			9,5x21	5	Nitro Volcano G.Gun	40	43	6	5540,-	**OE-fit**	B,C,D,M
			9,5x21	6	Nitro Volcano	40	43	6	5996,-	**OE-fit**	B,C,D,M

Bilmerke - Bilmodell	Årsmodell	Dimensjon	Felgdim.	Bilde	Felgmodell	ET Felg	ET Bil	Avvik ET	Veil. Pris eks. MVA	Merknader	B,C D, M
AUDI				PCD: **5-112** Bolt - Mutter: **14x1,50B**		CB: **57,1**					
RS6 (4B)	09.02-04.04	18-20	8x18	17	BM Drive M.Gun	25	30	10	2296,-		
			8,5x18	2	Nitro Sapphire FF	27	30	6	4036,-		B,C
			8,5x19	2	Nitro Sapphire FF	27	30	6	4684,-		B,C
			9x19	10	Nitro Demon H.Slv	28	30	4	3624,-		B,C
			9x19	11	Nitro Demon	28	30	4	3376,-		B,C
			8,5x20	2	Nitro Sapphire FF	30	30	0	5216,-		C
			8,5x20	11	Nitro Demon	25	30	10	3808,-		B,C
			9x20	5	Nitro Volcano G.Gun	25	30	10	4824,-		B,C
			9x20	6	Nitro Volcano	25	30	10	5164,-		B,C
			9x20	10	Nitro Demon H.Slv	30	30	0	4104,-		B,C
			9x20	11	Nitro Demon	30	30	0	3808,-		B,C
			9x21	5	Nitro Volcano G.Gun	25	30	10	5540,-		B,C
			9x21	6	Nitro Volcano	25	30	10	5996,-		B,C
AUDI				PCD: **5-112** Bolt - Mutter: **14x1,50B**		CB: **57,1**					
RS6 (4F)	03.08-10.10	19-22	8x19	3	Nitro Turismo FF	30	38	16	4492,-		
(Keramsika bremser spør oss!)			8x19	4	Nitro Turismo FF G.Gun/Pol	30	38	16	4644,-		
			8,5x19	2	Nitro Sapphire FF	34	38	8	4684,-		B,C
			9x19	10	Nitro Demon H.Slv	28	38	20	3624,-		B,C
			9x19	11	Nitro Demon	28	38	20	3376,-		B,C
			9x20	2	Nitro Sapphire FF	30	38	16	5216,-		B,C
			9x20	3	Nitro Turismo FF	30	38	16	4960,-		
			9x20	4	Nitro Turismo FF G.Gun/Pol	30	38	16	5048,-		
			9x20	5	Nitro Volcano G.Gun	32	38	12	4824,-		B,C
			9x20	6	Nitro Volcano	32	38	12	5164,-		B,C
			9x20	10	Nitro Demon H.Slv	30	38	16	4104,-		B,C
			9x20	11	Nitro Demon	30	38	16	3808,-		B,C
			9,5x20	3	Nitro Turismo FF	30	38	16	4960,-		M
			9,5x20	4	Nitro Turismo FF G.Gun/Pol	30	38	16	5048,-		M
			9,5x20	10	Nitro Demon H.Slv	30	38	16	4104,-		B,C,M
			9,5x20	11	Nitro Demon	30	38	16	3808,-		B,C,M
			9x21	5	Nitro Volcano G.Gun	32	38	12	5540,-		B,C
			9x21	6	Nitro Volcano	32	38	12	5996,-		B,C
AUDI				PCD: **5-112** Bolt - Mutter: **14x1,50B**		CB: **66,5**					
RS6 (4G)	04.13-11.19	20-22	9x20	2	Nitro Sapphire FF	20	21	2	5216,-	**OE-fit**	B,C,D
(Keramiska bremser spør oss!)			9x20	5	Nitro Volcano G.Gun	25	21	-8	4824,-	**OE-fit**	B,C,D
			9x20	6	Nitro Volcano	25	21	-8	5164,-	**OE-fit**	B,C,D
			9,5x20	3	Nitro Turismo FF	20	21	2	4960,-		D
			9,5x20	4	Nitro Turismo FF G.Gun/Pol	20	21	2	5048,-		D
			10x20	3	Nitro Turismo FF	25	21	-8	5116,-		D
			10x20	4	Nitro Turismo FF G.Gun/Pol	25	21	-8	5288,-		D
			11x20	3	Nitro Turismo FF	20	21	2	5296,-	Kun bak	D,M
			11x20	4	Nitro Turismo FF G.Gun/Pol	20	21	2	5416,-	Kun bak	D,M
			9x21	5	Nitro Volcano G.Gun	25	21	-8	5540,-	**OE-fit**	B,C,D
			9x21	6	Nitro Volcano	25	21	-8	5996,-	**OE-fit**	B,C,D
			10,5x22	1	Nitro Throne FF	20	21	2	6572,-		D,M
AUDI				PCD: **5-112** Bolt - Mutter: **14x1,50B**		CB: **57,1**					
S8 (4E)	10.06-12.10	18-22	8x18	10	Nitro Demon H.Slv	35	40	10	2972,-		B,C
(Keramiska bremser spør oss!)			8x18	11	Nitro Demon	35	40	10	2784,-		B,C
			8x18	17	BM Drive M.Gun	35	40	10	2296,-		B
			8x18	46	Image Stella	35	40	10	2276,-		B
			8x18	47	Image Stella M.Blk	35	40	10	2276,-		B
			8x18	48	Image Motion	35	40	10	2204,-		B
			8x18	49	Image Motion G.Gun	35	40	10	2204,-		B
			8x19	10	Nitro Demon H.Slv	35	40	10	3624,-		B,C
			8x19	11	Nitro Demon	35	40	10	3376,-		B,C
			8x19	48	Image Motion	35	40	10	2532,-		B
			8x19	49	Image Motion G.Gun	35	40	10	2532,-		B
			8,5x19	2	Nitro Sapphire FF	34	40	12	4684,-		B,C
			8,5x19	3	Nitro Turismo FF	35	40	10	4492,-		
			8,5x19	4	Nitro Turismo FF G.Gun/Pol	35	40	10	4644,-		
			8,5x19	5	Nitro Volcano G.Gun	32	40	16	4388,-		B,C
			8,5x19	6	Nitro Volcano	32	40	16	4632,-		B,C
			8,5x20	3	Nitro Turismo FF	35	40	10	4812,-		
			8,5x20	4	Nitro Turismo FF G.Gun/Pol	35	40	10	4964,-		
			8,5x20	10	Nitro Demon H.Slv	38	40	4	4104,-		B,C
			8,5x20	11	Nitro Demon	38	40	4	3808,-		B,C
			9x20	2	Nitro Sapphire FF	38	40	4	5216,-		B,C
			9x20	3	Nitro Turismo FF	30	40	20	4960,-		
			9x20	4	Nitro Turismo FF G.Gun/Pol	30	40	20	5048,-		
			9x20	5	Nitro Volcano G.Gun	32	40	16	4824,-		B,C
			9x20	6	Nitro Volcano	32	40	16	5164,-		B,C
			9x20	10	Nitro Demon H.Slv	40	40	0	4104,-		B,C
			9x20	11	Nitro Demon	40	40	0	3808,-		B,C
			9x20	15	Nitro Magnum	35	40	10	4572,-		
			9,5x20	5	Nitro Volcano G.Gun	40	40	0	4824,-		B,C,M
			9,5x20	6	Nitro Volcano	40	40	0	5164,-		B,C
			9x21	5	Nitro Volcano G.Gun	32	40	16	5540,-		B,C
			9x21	6	Nitro Volcano	32	40	16	5996,-		B,C
			9,5x21	5	Nitro Volcano G.Gun	40	40	0	5540,-		B,C,M
			9,5x21	6	Nitro Volcano	40	40	0	5996,-		B,C,M
			9x22	15	Nitro Magnum	35	40	10	5420,-		

Bilmerke - Bilmodell	Årsmodell	Dimensjon	Felgdim.	Bilde	Felgmodell	ET Felg	ET Bil	Avvik ET	Veil. Pris eks. MVA	Merknader	B,C D, M
AUDI				PCD: **5-112** Bolt - Mutter: **14x1,50B**		CB: **66,5**					
S7 (4G) sportback	12.11-04.19	19-22	8,5x19	5	Nitro Volcano G.Gun	25	32	14	4388,-	**OE-fit**	B,C,D
(Keramiska bremser spør oss!)			8,5x19	6	Nitro Volcano	25	32	14	4632,-	**OE-fit**	B,C,D
S8 (4H)	11.11-01.20	19-22	9x19	10	Nitro Demon H.Slv	28	32	8	3624,-	**OE-fit**	B,C,D
(Keramiska bremser spør oss!)			9x19	11	Nitro Demon	28	32	8	3376,-	**OE-fit**	B,C,D
			9,5x19	3	Nitro Turismo FF	25	32	14	4660,-		D
			9,5x19	4	Nitro Turismo FF G.Gun/Pol	25	32	14	4812,-		D
			8,5x20	11	Nitro Demon	25	32	14	3808,-	**OE-fit**	B,C,D
			8,5x20	24	ATS Mizar	29	32	6	5948,-		D
			8,5x20	25	ATS Mizar G.Blk	29	32	6	6020,-		D
			9x20	2	Nitro Sapphire FF	30	32	4	5216,-	**OE-fit**	B,C,D
			9x20	3	Nitro Turismo FF	30	32	4	4960,-		D
			9x20	4	Nitro Turismo FF G.Gun/Pol	30	32	4	5048,-		D
			9x20	5	Nitro Volcano G.Gun	25	32	14	4824,-	**OE-fit**	B,C,D
			9x20	6	Nitro Volcano	25	32	14	5164,-	**OE-fit**	B,C,D
			9x20	10	Nitro Demon H.Slv	30	32	4	4104,-	**OE-fit**	B,C,D
			9x20	11	Nitro Demon	30	32	4	3808,-	**OE-fit**	B,C,D
			9,5x20	3	Nitro Turismo FF	30	32	4	4960,-		D
			9,5x20	4	Nitro Turismo FF G.Gun/Pol	30	32	4	5048,-		D
			9,5x20	10	Nitro Demon H.Slv	30	32	4	4104,-	**OE-fit**	B,C,D
			9,5x20	11	Nitro Demon	30	32	4	3808,-	**OE-fit**	B,C,D
			10x20	1	Nitro Throne FF	30	32	4	5308,-		D
			10x20	3	Nitro Turismo FF	25	32	14	5116,-		D
			10x20	4	Nitro Turismo FF G.Gun/Pol	25	32	14	5288,-		D
			9x21	5	Nitro Volcano G.Gun	25	32	14	5540,-	**OE-fit**	B,C,D
			9x21	6	Nitro Volcano	25	32	14	5996,-	**OE-fit**	B,C,D
			9x21	24	ATS Mizar	37	32	-10	8276,-		D
			9x21	25	ATS Mizar G.Blk	37	32	-10	8352,-		D
			10x21	24	ATS Mizar	30	32	4	9016,-		D,M
			10x21	25	ATS Mizar G.Blk	30	32	4	9156,-	**OE-fit**	B,D,M
			10,5x22	1	Nitro Throne FF	30	32	4	6572,-		D,M
AUDI				PCD: **5-112** Bolt - Mutter: **14x1,50B**		CB: **66,5**					
S7 (F2) sportback	05.19-	19-22	8,5x19	2	Nitro Sapphire FF	27	30	6	4684,-	**OE-fit**	B,C,D
			8,5x19	5	Nitro Volcano G.Gun	25	30	10	4388,-	**OE-fit**	B,C,D
			8,5x19	6	Nitro Volcano	25	30	10	4632,-	**OE-fit**	B,C,D
			9x19	3	Nitro Turismo FF	20	30	20	4660,-		D
			9x19	4	Nitro Turismo FF G.Gun/Pol	20	30	20	4812,-		D
			9x20	2	Nitro Sapphire FF	30	30	0	5216,-	**OE-fit**	B,C,D
			9x20	3	Nitro Turismo FF	30	30	0	4960,-		D
			9x20	4	Nitro Turismo FF G.Gun/Pol	30	30	0	5048,-		D
			9x20	5	Nitro Volcano G.Gun	25	30	10	4824,-	**OE-fit**	B,C,D
			9x20	6	Nitro Volcano	25	30	10	5164,-	**OE-fit**	B,C,D
			9,5x20	3	Nitro Turismo FF	25	30	10	4960,-		D
			9,5x20	4	Nitro Turismo FF G.Gun/Pol	25	30	10	5048,-		D
			10x20	3	Nitro Turismo FF	25	30	10	5116,-		D
			10x20	4	Nitro Turismo FF G.Gun/Pol	25	30	10	5288,-		D
			9x21	5	Nitro Volcano G.Gun	25	30	10	5540,-	**OE-fit**	B,C,D
			9x21	6	Nitro Volcano	25	30	10	5996,-	**OE-fit**	B,C,D
AUDI				PCD: **5-112** Bolt - Mutter: **14x1,50B**		CB: **66,5**					
S8 (F8)	02.20-	19-22	8x19	3	Nitro Turismo FF	30	37	14	4492,-		D
(Biler med keramiska bremser			8x19	4	Nitro Turismo FF G.Gun/Pol	30	37	14	4644,-		D
krever 20")			9x20	3	Nitro Turismo FF	30	37	14	4960,-		D
			9x20	4	Nitro Turismo FF G.Gun/Pol	30	37	14	5048,-		D
AUDI				PCD: **5-112** Bolt - Mutter: **14x1,50B**		CB: **66,5**					
RS7 (4G) sportback	04.13-11.19	20-22	8,5x20	24	ATS Mizar	29	35	12	5948,-		D
(Keramiska bremser spør oss!)			8,5x20	25	ATS Mizar G.Blk	29	35	12	6020,-		D
			9x20	2	Nitro Sapphire FF	30	35	10	5216,-	**OE-fit**	B,C,D
			9,5x20	3	Nitro Turismo FF	30	35	10	4960,-		D
			9,5x20	4	Nitro Turismo FF G.Gun/Pol	30	35	10	5048,-		D
			9,5x20	10	Nitro Demon H.Slv	30	35	10	4104,-	**OE-fit**	B,C,D
			9,5x20	11	Nitro Demon	30	35	10	3808,-	**OE-fit**	B,C,D
			10x20	1	Nitro Throne FF	30	35	10	5308,-		D
			10x20	3	Nitro Turismo FF	25	35	20	5116,-		D
			10x20	4	Nitro Turismo FF G.Gun/Pol	25	35	20	5288,-		D
			10x21	24	ATS Mizar	30	35	10	9016,-		D
			10x21	25	ATS Mizar G.Blk	30	35	10	9156,-		D
			10,5x22	1	Nitro Throne FF	30	35	10	6572,-		D,M
AUDI				PCD: **5-112** Bolt - Mutter: **14x1,50B**		CB: **66,5**					
RS6 (F2) avant	12.19-	21-22	10,5x22	1	Nitro Throne FF	20	19	-2	6572,-		D
RS7 (F2) sportback	12.19-	21-22									
AUDI				PCD: **5-112** Bolt - Mutter: **14x1,50B**		CB: **57,1**					
A6 (4B) allroad	05.00-04.06	16-20	8x17	17	BM Drive M.Gun	25	25	0	1736,-		
Ur-Quattro	03.80-03.91	15-18	8x18	17	BM Drive M.Gun	25	25	0	2296,-		
AUDI				PCD: **5-112** Bolt - Mutter: **14x1,50B**		CB: **57,1**					
Q2 (GA)	07.16-	16-21	6,5x16	20	ATS Antares	41	45	8	1852,-	**OE-fit**	B,C,D
SQ2 (GA)	03.19-	17-21	6,5x16	21	ATS Antares G.Blk	41	45	8	1896,-	**OE-fit**	B,C,D
			6,5x16	29	CSP 13	41	45	8	1716,-	**OE-fit**	B,C,D
			6,5x16	30	CSP 13 M.Gun	41	45	8	1716,-	**OE-fit**	B,C,D
			6,5x16	36	Image Colt	45	45	0	1624,-		B
			6,5x16	40	Image Spirit	41	45	8	1264,-	**OE-fit**	B,D
			6,5x16	46	Image Stella	41	45	8	1548,-	**OE-fit**	B,D
			6,5x16	47	Image Stella M.Blk	41	45	8	1548,-	**OE-fit**	B,D
			6,5x16	48	Image Motion	41	45	8	1468,-	**OE-fit**	B,D
			6,5x16	50	Image Legend	41	45	8	1544,-	**OE-fit**	B,D
			6,5x16	92	Image Colt L.Gun	45	45	0	1548,-		B
			7x16	17	BM Drive M.Gun	45	45	0	1476,-		D

Forts. neste side »

Bilmerke - Bilmodell	Årsmodell	Dimensjon	Felgdim.	Bilde	Felgmodell	ET Felg	ET Bil	Avvik ET	Veil. Pris eks. MVA	Merknader	B,C D, M
AUDI (forts.)				PCD: **5-112** Bolt - Mutter: **14x1,50B**		CB: **57,1**					
			7x17	17	BM Drive M.Gun	45	45	0	1736,-		D
			7x17	20	ATS Antares	40	45	10	2264,-	**OE-fit**	B,D
			7x17	21	ATS Antares G.Blk	40	45	10	2380,-	**OE-fit**	B,D
			7x17	29	CSP 13	40	45	10	2152,-	**OE-fit**	B,C,D
			7x17	30	CSP 13 M.Gun	40	45	10	2152,-	**OE-fit**	B,C,D
			7x17	40	Image Spirit	40	45	10	1476,-	**OE-fit**	B,D
			7x17	46	Image Stella	40	45	10	1812,-	**OE-fit**	B,D
			7x17	47	Image Stella M.Blk	40	45	10	1812,-	**OE-fit**	B,D
			7x17	48	Image Motion	45	45	0	1736,-	**OE-fit**	B,D
			7x17	49	Image Motion G.Gun	45	45	0	1736,-	**OE-fit**	B,D
			7,5x17	9	Nitro Sabre G.Blk	45	45	0	3052,-		B,C
			7,5x17	16	Advanti Inizio DST	42	45	6	3324,-		B
			7,5x17	36	Image Colt	45	45	0	1956,-		B
			7,5x17	50	Image Legend	40	45	10	1812,-	**OE-fit**	B,D
			7,5x17	92	Image Colt L.Gun	45	45	0	1876,-		B
			8x17	17	BM Drive M.Gun	45	45	0	1736,-		
			7x18	22	ATS Evolution	45	45	0	3016,-	**OE-fit**	B,C,D
			7x18	23	ATS Evolution G.Grey	45	45	0	3116,-	**OE-fit**	B,C,D
			8x18	7	Nitro Spark G.Blk/Grey	45	45	0	3476,-		B
			8x18	8	Nitro Spark G.Blk/Red	45	45	0	3476,-		
			8x18	9	Nitro Sabre G.Blk	45	45	0	3496,-		B,C
			8x18	10	Nitro Demon H.Slv	47	45	-4	2972,-		B,C
			8x18	11	Nitro Demon	47	45	-4	2784,-		B,C
			8x18	16	Advanti Inizio DST	45	45	0	3828,-		B
			8x18	17	BM Drive M.Gun	45	45	0	2296,-		
			8x18	20	ATS Antares	40	45	10	3056,-		B,C
			8x18	21	ATS Antares G.Blk	40	45	10	3136,-		B,C
			8x18	29	CSP 13	44	45	2	2932,-	**OE-fit**	B,C,D
			8x18	30	CSP 13 M.Gun	44	45	2	2932,-	**OE-fit**	B,C,D
			8x18	36	Image Colt	45	45	0	2412,-		B
			8x18	40	Image Spirit	40	45	10	1912,-	**OE-fit**	B,D
			8x18	46	Image Stella	40	45	10	2276,-	**OE-fit**	B,D
			8x18	47	Image Stella M.Blk	40	45	10	2276,-	**OE-fit**	B,D
			8x18	48	Image Motion	44	45	2	2204,-	**OE-fit**	B,D
			8x18	49	Image Motion G.Gun	44	45	2	2204,-	**OE-fit**	B,D
			8x18	50	Image Legend	45	45	0	2276,-	**OE-fit**	B,D
			8x18	92	Image Colt L.Gun	45	45	0	2296,-		B
			8x19	10	Nitro Demon H.Slv	47	45	-4	3624,-		B,C
			8x19	11	Nitro Demon	47	45	-4	3376,-		B,C
			8x19	16	Advanti Inizio DST	45	45	0	4412,-		B
			8x19	29	CSP 13	44	45	2	3404,-	**OE-fit**	B,C,D
			8x19	30	CSP 13 M.Gun	44	45	2	3404,-	**OE-fit**	B,C,D
			8x19	48	Image Motion	44	45	2	2532,-	**OE-fit**	B,D
			8x19	49	Image Motion G.Gun	44	45	2	2532,-	**OE-fit**	B,D
			8,5x19	3	Nitro Turismo FF	43	45	4	4492,-		D
			8,5x19	4	Nitro Turismo FF G.Gun/Pol	43	45	4	4644,-		D
			8,5x19	5	Nitro Volcano G.Gun	45	45	0	4388,-		B,C
			8,5x19	6	Nitro Volcano	45	45	0	4632,-		B,C
			8,5x19	9	Nitro Sabre G.Blk	45	45	0	4292,-		B,C
			8,5x19	36	Image Colt	45	45	0	3028,-		B
			8,5x19	92	Image Colt L.Gun	45	45	0	2876,-		B
			8,5x20	1	Nitro Throne FF	40	45	10	5060,-		M
			8,5x20	3	Nitro Turismo FF	43	45	4	4812,-		
			8,5x20	4	Nitro Turismo FF G.Gun/Pol	43	45	4	4964,-		
			8,5x20	5	Nitro Volcano G.Gun	45	45	0	4824,-		B,C
			8,5x20	6	Nitro Volcano	45	45	0	5164,-		B,C
			8,5x20	7	Nitro Spark G.Blk/Grey	45	45	0	4660,-		B
			8,5x20	8	Nitro Spark G.Blk/Red	45	45	0	4660,-		B
			8,5x20	9	Nitro Sabre G.Blk	45	45	0	4800,-		B,C
			8,5x20	10	Nitro Demon H.Slv	45	45	0	4104,-		B,C
			8,5x20	11	Nitro Demon	45	45	0	3808,-		B,C
			8,5x20	36	Image Colt	45	45	0	3432,-		B
			8,5x20	92	Image Colt L.Gun	45	45	0	3276,-		B
			9x21	5	Nitro Volcano G.Gun	45	45	0	5540,-		B,M
			9x21	6	Nitro Volcano	45	45	0	5996,-		B,M
AUDI				PCD: **5-112** Bolt - Mutter: **14x1,50B**		CB: **57,1**					
Q3 (8U)	06.11-10.18	16-21	6,5x16	20	ATS Antares	33	43	20	1852,-	**OE-fit**	B,C,D
			6,5x16	21	ATS Antares G.Blk	33	43	20	1896,-	**OE-fit**	B,C,D
			6,5x16	29	CSP 13	33	43	20	1716,-	**OE-fit**	B,C,D
			6,5x16	30	CSP 13 M.Gun	33	43	20	1716,-	**OE-fit**	B,C,D
			6,5x16	36	Image Colt	35	43	16	1624,-		B
			6,5x16	92	Image Colt L.Gun	35	43	16	1548,-		B
			7x16	17	BM Drive M.Gun	38	43	10	1476,-		D
			7x16	48	Image Motion	35	43	16	1468,-		B
			7x16	50	Image Legend	35	43	16	1544,-		B
			7,5x16	20	ATS Antares	37	43	12	1852,-		B,C
			7,5x16	21	ATS Antares G.Blk	37	43	12	1896,-		B,C
			7x17	17	BM Drive M.Gun	40	43	6	1736,-		D
			7x17	29	CSP 13	40	43	6	2152,-	**OE-fit**	B,C,D
			7x17	30	CSP 13 M.Gun	40	43	6	2152,-	**OE-fit**	B,C,D
			7x17	40	Image Spirit	40	43	6	1476,-	**OE-fit**	B,D
			7x17	46	Image Stella	40	43	6	1812,-	**OE-fit**	B,D
			7x17	47	Image Stella M.Blk	40	43	6	1812,-	**OE-fit**	B,D
			7x17	48	Image Motion	35	43	16	1736,-	**OE-fit**	B,D
			7x17	49	Image Motion G.Gun	40	43	6	1736,-	**OE-fit**	B,D
			7,5x17	20	ATS Antares	37	43	12	2264,-		B,C

Forts. neste side »

Bilmerke - Bilmodell	Årsmodell	Dimensjon	Felgdim.	Bilde	Felgmodell	ET Felg	ET Bil	Avvik ET	Veil. Pris eks. MVA	Merknader	B,C D, M
AUDI (forts.)			PCD: **5-112** Bolt - Mutter: **14x1,50B** CB: **57,1**								
			7,5x17	21	ATS Antares G.Blk	37	43	12	2380,-		B,C
			7,5x17	36	Image Colt	35	43	16	1956,-		
			7,5x17	50	Image Legend	40	43	6	1812,-	**OE-fit**	B,D
			7,5x17	92	Image Colt L.Gun	35	43	16	1876,-		B
			8x17	9	Nitro Sabre G.Blk	35	43	16	3108,-		B,C
			8x17	17	BM Drive M.Gun	35	43	16	1736,-		B
			8x17	48	Image Motion	35	43	16	1736,-		B
			8x17	49	Image Motion G.Gun	35	43	16	1736,-		B
			7,5x18	29	CSP 13	35	43	16	2932,-	**OE-fit**	B,C,D
			7,5x18	30	CSP 13 M.Gun	35	43	16	2932,-	**OE-fit**	B,C,D
			8x18	2	Nitro Sapphire FF	39	43	8	4036,-		B,C
			8x18	7	Nitro Spark G.Blk/Grey	35	43	16	3476,-		B
			8x18	9	Nitro Sabre G.Blk	35	43	16	3496,-		B,C
			8x18	10	Nitro Demon H.Slv	40	43	6	2972,-		B,C
			8x18	11	Nitro Demon	40	43	6	2784,-		B,C
			8x18	16	Advanti Inizio DST	35	43	16	3828,-		B
			8x18	17	BM Drive M.Gun	40	43	6	2296,-		D
			8x18	20	ATS Antares	39	43	8	3056,-		B,C
			8x18	21	ATS Antares G.Blk	39	43	8	3136,-		B,C
			8x18	36	Image Colt	35	43	16	2412,-		B
			8x18	40	Image Spirit	40	43	6	1912,-	**OE-fit**	B,D
			8x18	46	Image Stella	40	43	6	2276,-	**OE-fit**	B,D
			8x18	47	Image Stella M.Blk	40	43	6	2276,-	**OE-fit**	B,D
			8x18	48	Image Motion	44	43	-2	2204,-	**OE-fit**	B,D
			8x18	49	Image Motion G.Gun	44	43	-2	2204,-	**OE-fit**	B,D
			8x18	50	Image Legend	40	43	6	2276,-	**OE-fit**	B,D
			8x18	92	Image Colt L.Gun	35	43	16	2296,-		B
			8x19	2	Nitro Sapphire FF	39	43	8	4684,-		B,C
			8x19	10	Nitro Demon H.Slv	40	43	6	3624,-		B,C
			8x19	16	Advanti Inizio DST	35	43	16	4412,-		B
			8x19	48	Image Motion	44	43	-2	2532,-	**OE-fit**	B,D
			8x19	49	Image Motion G.Gun	44	43	-2	2532,-	**OE-fit**	B,D
			8,5x19	2	Nitro Sapphire FF	40	43	6	4684,-		C
			8,5x19	5	Nitro Volcano G.Gun	40	43	6	4388,-		C
			8,5x19	6	Nitro Volcano	40	43	6	4632,-		B,C
			8,5x19	9	Nitro Sabre G.Blk	35	43	16	4292,-		B,C
			8,5x19	36	Image Colt	35	43	16	3028,-		B
			8,5x19	92	Image Colt L.Gun	35	43	16	2876,-		B
			9x19	12	Nitro Edge M.Blk	40	43	6	3884,-		M
			8,5x20	1	Nitro Throne FF	40	43	6	5060,-		
			8,5x20	2	Nitro Sapphire FF	40	43	6	5216,-		B,C
			8,5x20	5	Nitro Volcano G.Gun	45	43	-4	4824,-		B,C
			8,5x20	6	Nitro Volcano	45	43	-4	5164,-		B,C
			8,5x20	7	Nitro Spark G.Blk/Grey	35	43	16	4660,-		B
			8,5x20	9	Nitro Sabre G.Blk	35	43	16	4800,-		B,C
			8,5x20	10	Nitro Demon H.Slv	38	43	10	4104,-		B,C
			8,5x20	11	Nitro Demon	38	43	10	3808,-		B,C
			8,5x20	36	Image Colt	35	43	16	3432,-		B
			8,5x20	92	Image Colt L.Gun	35	43	16	3276,-		B
			9x20	5	Nitro Volcano G.Gun	40	43	6	4824,-		B,C,M
			9x20	6	Nitro Volcano	40	43	6	5164,-		B,C,M
			9x20	10	Nitro Demon H.Slv	40	43	6	4104,-		B,C,M
			9x20	11	Nitro Demon	40	43	6	3808,-		B,C,M
			9x20	12	Nitro Edge M.Blk	40	43	6	4220,-		M
			9x20	15	Nitro Magnum	40	43	6	4572,-		M
			9x21	5	Nitro Volcano G.Gun	40	43	6	5540,-		B,C,M
			9x21	6	Nitro Volcano	40	43	6	5996,-		B,C,M
AUDI			PCD: **5-112** Bolt - Mutter: **14x1,50B** CB: **57,1**								
Q3 (F3)	11.18-	17-22	7x17	17	BM Drive M.Gun	40	40	0	1736,-	**OE-fit**	B,D
Q3 (F3) sportback	08.19-	17-22	7x17	20	ATS Antares	40	40	0	2264,-	**OE-fit**	B,C,D
			7x17	21	ATS Antares G.Blk	40	40	0	2380,-	**OE-fit**	B,C,D
			7x17	29	CSP 13	40	40	0	2152,-	**OE-fit**	B,D
			7x17	30	CSP 13 M.Gun	40	40	0	2152,-	**OE-fit**	B,D
			7x17	40	Image Spirit	40	40	0	1476,-	**OE-fit**	B,D
			7x17	46	Image Stella	40	40	0	1812,-	**OE-fit**	B,D
			7x17	47	Image Stella M.Blk	40	40	0	1812,-	**OE-fit**	B,D
			7x17	48	Image Motion	40	40	0	1736,-	**OE-fit**	B,D
			7x17	49	Image Motion G.Gun	40	40	0	1736,-	**OE-fit**	B,D
			7,5x17	16	Advanti Inizio DST	42	40	-4	3324,-		B
			7,5x17	36	Image Colt	35	40	10	1956,-		B
			7,5x17	50	Image Legend	40	40	0	1812,-	**OE-fit**	B,D
			7,5x17	92	Image Colt L.Gun	35	40	10	1876,-		B
			8x17	9	Nitro Sabre G.Blk	35	40	10	3108,-		B,C
			8x17	17	BM Drive M.Gun	35	40	10	1736,-		B
			8x17	48	Image Motion	35	40	10	1736,-		B,C
			8x17	49	Image Motion G.Gun	35	40	10	1736,-		B,C
			7,5x18	29	CSP 13	35	40	10	2932,-	**OE-fit**	B,D
			7,5x18	30	CSP 13 M.Gun	35	40	10	2932,-	**OE-fit**	B,D
			8x18	2	Nitro Sapphire FF	39	40	2	4036,-		B,C
			8x18	7	Nitro Spark G.Blk/Grey	35	40	10	3476,-		B
			8x18	9	Nitro Sabre G.Blk	35	40	10	3496,-		B,C
			8x18	10	Nitro Demon H.Slv	40	40	0	2972,-		B,C
			8x18	11	Nitro Demon	40	40	0	2784,-		B,C
			8x18	16	Advanti Inizio DST	35	40	10	3828,-		B
			8x18	17	BM Drive M.Gun	40	40	0	2296,-	**OE-fit**	B,D
			8x18	20	ATS Antares	40	40	0	3056,-		B,C

Forts. neste side »

Bilmerke - Bilmodell	Årsmodell	Dimensjon	Felgdim.	Bilde	Felgmodell	ET Felg	ET Bil	Avvik ET	Veil. Pris eks. MVA	Merknader	B,C D, M
AUDI (forts.)				PCD: **5-112** Bolt - Mutter: **14x1,50B**		CB: **57,1**					
			8x18	21	ATS Antares G.Blk	40	40	0	3136,-		B,C
			8x18	29	CSP 13	40	40	0	2932,-	**OE-fit**	B,D
			8x18	30	CSP 13 M.Gun	40	40	0	2932,-	**OE-fit**	B,D
			8x18	36	Image Colt	35	40	10	2412,-		B
			8x18	40	Image Spirit	40	40	0	1912,-	**OE-fit**	B,D
			8x18	46	Image Stella	40	40	0	2276,-	**OE-fit**	B,D
			8x18	47	Image Stella M.Blk	40	40	0	2276,-	**OE-fit**	B,D
			8x18	48	Image Motion	35	40	10	2204,-		B,C
			8x18	49	Image Motion G.Gun	35	40	10	2204,-		B,C
			8x18	50	Image Legend	40	40	0	2276,-	**OE-fit**	B,D
			8x18	92	Image Colt L.Gun	35	40	10	2296,-		B
			8x19	2	Nitro Sapphire FF	39	40	2	4684,-		B,C
			8x19	10	Nitro Demon H.Slv	40	40	0	3624,-		B,C
			8x19	16	Advanti Inizio DST	35	40	10	4412,-		B
			8x19	29	CSP 13	40	40	0	3404,-	**OE-fit**	B,D
			8x19	30	CSP 13 M.Gun	40	40	0	3404,-	**OE-fit**	B,D
			8x19	48	Image Motion	35	40	10	2532,-		B,C
			8x19	49	Image Motion G.Gun	35	40	10	2532,-		B,C
			8,5x19	2	Nitro Sapphire FF	40	40	0	4684,-		C
			8,5x19	3	Nitro Turismo FF	43	40	-6	4492,-		D
			8,5x19	4	Nitro Turismo FF G.Gun/Pol	43	40	-6	4644,-		D
			8,5x19	5	Nitro Volcano G.Gun	40	40	0	4388,-		B,C
			8,5x19	6	Nitro Volcano	40	40	0	4632,-		B,C
			8,5x19	9	Nitro Sabre G.Blk	35	40	10	4292,-		B,C
			8,5x19	36	Image Colt	35	40	10	3028,-		B
			8,5x19	92	Image Colt L.Gun	35	40	10	2876,-		B
			8,5x20	1	Nitro Throne FF	40	40	0	5060,-		
			8,5x20	2	Nitro Sapphire FF	40	40	0	5216,-		B,C
			8,5x20	3	Nitro Turismo FF	43	40	-6	4812,-		
			8,5x20	4	Nitro Turismo FF G.Gun/Pol	43	40	-6	4964,-		
			8,5x20	7	Nitro Spark G.Blk/Grey	35	40	10	4660,-		B
			8,5x20	9	Nitro Sabre G.Blk	35	40	10	4800,-		B,C
			8,5x20	10	Nitro Demon H.Slv	38	40	4	4104,-		B,C
			8,5x20	11	Nitro Demon	38	40	4	3808,-		B,C
			8,5x20	36	Image Colt	35	40	10	3432,-		B
			8,5x20	92	Image Colt L.Gun	35	40	10	3276,-		B
			9x20	5	Nitro Volcano G.Gun	40	40	0	4824,-		B,C
			9x20	6	Nitro Volcano	40	40	0	5164,-		B,C
			9x20	10	Nitro Demon H.Slv	40	40	0	4104,-		B,C
			9x20	11	Nitro Demon	40	40	0	3808,-		B,C
			9x20	12	Nitro Edge M.Blk	40	40	0	4220,-		B
			9x20	15	Nitro Magnum	40	40	0	4572,-		
			9x21	5	Nitro Volcano G.Gun	40	40	0	5540,-		B,C
			9x21	6	Nitro Volcano	40	40	0	5996,-		B,C
AUDI				PCD: **5-112** Bolt - Mutter: **14x1,50B**		CB: **57,1**					
Q3 (8U) RS	08.13-12.16	18-21	8x18	2	Nitro Sapphire FF	30	34	8	4036,-		C
			8x18	16	Advanti Inizio DST	30	34	8	3828,-		
			8x18	46	Image Stella	30	34	8	2276,-		
			8x18	47	Image Stella M.Blk	30	34	8	2276,-		
			8x18	48	Image Motion	35	34	-2	2204,-		B
			8x18	49	Image Motion G.Gun	35	34	-2	2204,-		B
			8,5x18	2	Nitro Sapphire FF	27	34	14	4036,-		B,C
			8x19	2	Nitro Sapphire FF	30	34	8	4684,-		C
			8x19	3	Nitro Turismo FF	30	34	8	4492,-		
			8x19	4	Nitro Turismo FF G.Gun/Pol	30	34	8	4644,-		
			8x19	16	Advanti Inizio DST	30	34	8	4412,-		
			8x19	48	Image Motion	35	34	-2	2532,-		B
			8x19	49	Image Motion G.Gun	35	34	-2	2532,-		B
			8,5x19	2	Nitro Sapphire FF	34	34	0	4684,-		B,C
			8,5x19	5	Nitro Volcano G.Gun	32	34	4	4388,-		B,C
			8,5x19	6	Nitro Volcano	32	34	4	4632,-		B,C
			9x19	10	Nitro Demon H.Slv	28	34	12	3624,-		B,C
			9x19	11	Nitro Demon	28	34	12	3376,-		B,C
			8,5x20	1	Nitro Throne FF	30	34	8	5060,-		
			8,5x20	2	Nitro Sapphire FF	30	34	8	5216,-		C
			9x20	2	Nitro Sapphire FF	30	34	8	5216,-		C
			9x20	5	Nitro Volcano G.Gun	32	34	4	4824,-		B,C
			9x20	6	Nitro Volcano	32	34	4	5164,-		B,C
			9x20	10	Nitro Demon H.Slv	30	34	8	4104,-		B,C
			9x20	11	Nitro Demon	30	34	8	3808,-		B,C
			9x20	15	Nitro Magnum	28	34	12	4572,-		
			9x21	5	Nitro Volcano G.Gun	32	34	4	5540,-		B,C
			9x21	6	Nitro Volcano	32	34	4	5996,-		B,C
AUDI				PCD: **5-112** Bolt - Mutter: **14x1,50B**		CB: **57,1**					
RSQ3 (F3)	10.19-	19-22	8x19	2	Nitro Sapphire FF	30	38	16	4684,-		C
RSQ3 (F3) sportback	10.19-	19-22	8x19	3	Nitro Turismo FF	30	38	16	4492,-		
			8x19	4	Nitro Turismo FF G.Gun/Pol	30	38	16	4644,-		
			8,5x19	3	Nitro Turismo FF	35	38	6	4492,-		
			8,5x19	4	Nitro Turismo FF G.Gun/Pol	35	38	6	4644,-		
			8,5x20	2	Nitro Sapphire FF	30	38	16	5216,-		C
			8,5x20	3	Nitro Turismo FF	35	38	6	4812,-		
			8,5x20	4	Nitro Turismo FF G.Gun/Pol	35	38	6	4964,-		
			8,5x20	9	Nitro Sabre G.Blk	35	38	6	4800,-		C
			8,5x20	36	Image Colt	35	38	6	3432,-		B
			8,5x20	92	Image Colt L.Gun	35	38	6	3276,-		B

Bilmerke - Bilmodell	Årsmodell	Dimensjon	Felgdim.	Bilde	Felgmodell	ET Felg	ET Bil	Avvik ET	Veil. Pris eks. MVA	Merknader	B,C D, M
AUDI			PCD: **5-112** Bolt - Mutter: **14x1,50B** CB: **66,5**								
Q5 (8R)	12.08-12.16	17-22	7,5x17	20	ATS Antares	37	39	4	2264,-	**OE-fit**	B,C,D
Q5 (FY)	01.17-	17-22	7,5x17	21	ATS Antares G.Blk	37	39	4	2380,-	**OE-fit**	B,C,D
TFSI e 18"			7,5x17	36	Image Colt	35	39	8	1956,-		D
			7,5x17	46	Image Stella	35	39	8	1812,-		D
			7,5x17	47	Image Stella M.Blk	35	39	8	1812,-	**OE-fit**	B,D
			7,5x17	50	Image Legend	35	39	8	1812,-		D
			7,5x17	92	Image Colt L.Gun	35	39	8	1876,-		D
			8x17	9	Nitro Sabre G.Blk	35	39	8	3108,-	**OE-fit**	B,C,D
			8x17	17	BM Drive M.Gun	35	39	8	1736,-		D
			8x17	40	Image Spirit	35	39	8	1476,-		D
			8x17	48	Image Motion	35	39	8	1736,-		D
			8x17	49	Image Motion G.Gun	35	39	8	1736,-		D
			8x18	2	Nitro Sapphire FF	39	39	0	4036,-		C,D
			8x18	7	Nitro Spark G.Blk/Grey	35	39	8	3476,-		D
			8x18	9	Nitro Sabre G.Blk	35	39	8	3496,-	**OE-fit**	B,C,D
			8x18	10	Nitro Demon H.Slv	35	39	8	2972,-		C,D
			8x18	11	Nitro Demon	35	39	8	2784,-		C,D
			8x18	16	Advanti Inizio DST	35	39	8	3828,-		D
			8x18	17	BM Drive M.Gun	35	39	8	2296,-		D
			8x18	20	ATS Antares	39	39	0	3056,-	**OE-fit**	B,C,D
			8x18	21	ATS Antares G.Blk	39	39	0	3136,-	**OE-fit**	B,C,D
			8x18	26	CSP 18 G.Blk/pol	30	39	18	2956,-		D
			8x18	27	CSP 18	30	39	18	2972,-		D
			8x18	28	CSP 18 G.Blk	30	39	18	2972,-		D
			8x18	36	Image Colt	35	39	8	2412,-		D
			8x18	40	Image Spirit	35	39	8	1912,-	**OE-fit**	B,D
			8x18	46	Image Stella	35	39	8	2276,-		D
			8x18	47	Image Stella M.Blk	35	39	8	2276,-		D
			8x18	48	Image Motion	35	39	8	2204,-		D
			8x18	49	Image Motion G.Gun	35	39	8	2204,-		D
			8x18	50	Image Legend	35	39	8	2276,-		D
			8x18	92	Image Colt L.Gun	35	39	8	2296,-		D
			8,5x18	16	Advanti Inizio DST	35	39	8	3828,-		D
			8x19	2	Nitro Sapphire FF	39	39	0	4684,-		C,D
			8x19	10	Nitro Demon H.Slv	35	39	8	3624,-		C,D
			8x19	11	Nitro Demon	35	39	8	3376,-		C,D
			8x19	16	Advanti Inizio DST	35	39	8	4412,-		D
			8x19	26	CSP 18 G.Blk/pol	30	39	18	3596,-		D
			8x19	27	CSP 18	30	39	18	3444,-		D
			8x19	28	CSP 18 G.Blk	30	39	18	3444,-		D
			8x19	48	Image Motion	35	39	8	2532,-		D
			8x19	49	Image Motion G.Gun	35	39	8	2532,-		D
			8,5x19	2	Nitro Sapphire FF	40	39	-2	4684,-		C,D
			8,5x19	3	Nitro Turismo FF	35	39	8	4492,-		D
			8,5x19	4	Nitro Turismo FF G.Gun/Pol	35	39	8	4644,-		D
			8,5x19	5	Nitro Volcano G.Gun	32	39	14	4388,-		C,D
			8,5x19	6	Nitro Volcano	32	39	14	4632,-		C,D
			8,5x19	9	Nitro Sabre G.Blk	35	39	8	4292,-	**OE-fit**	B,C,D
			8,5x19	16	Advanti Inizio DST	35	39	8	4412,-		D
			8,5x19	36	Image Colt	35	39	8	3028,-		D
			8,5x19	92	Image Colt L.Gun	35	39	8	2876,-		D
			8,5x19	96	Image Colt SUV G.Blk/Pol	34	39	10	3492,-	**OE-fit**	B,D
			8,5x19	97	Image Colt SUV L.Gun	34	39	10	3396,-	**OE-fit**	B,D
			9x19	10	Nitro Demon H.Slv	28	39	22	3624,-		C,D
			9x19	11	Nitro Demon	28	39	22	3376,-		C,D
			9x19	12	Nitro Edge M.Blk	40	39	-2	3884,-		D
			9,5x19	5	Nitro Volcano G.Gun	40	39	-2	4388,-		C,D
			9,5x19	6	Nitro Volcano	40	39	-2	4632,-		C,D
			8,5x20	1	Nitro Throne FF	30	39	18	5060,-		D
			8,5x20	2	Nitro Sapphire FF	40	39	-2	5216,-		C,D
			8,5x20	3	Nitro Turismo FF	35	39	8	4812,-		D
			8,5x20	4	Nitro Turismo FF G.Gun/Pol	35	39	8	4964,-		D
			8,5x20	7	Nitro Spark G.Blk/Grey	35	39	8	4660,-		D
			8,5x20	9	Nitro Sabre G.Blk	35	39	8	4800,-	**OE-fit**	B,C,D
			8,5x20	10	Nitro Demon H.Slv	38	39	2	4104,-		C,D
			8,5x20	11	Nitro Demon	38	39	2	3808,-		C,D
			8,5x20	24	ATS Mizar	40	39	-2	5948,-		D
			8,5x20	25	ATS Mizar G.Blk	40	39	-2	6020,-		D
			8,5x20	36	Image Colt	35	39	8	3432,-		D
			8,5x20	92	Image Colt L.Gun	35	39	8	3276,-		D
			9x20	1	Nitro Throne FF	35	39	8	5060,-		D
			9x20	2	Nitro Sapphire FF	38	39	2	5216,-		C,D
			9x20	5	Nitro Volcano G.Gun	32	39	14	4824,-		C,D
			9x20	6	Nitro Volcano	32	39	14	5164,-		C,D
			9x20	10	Nitro Demon H.Slv	30	39	18	4104,-		C,D
			9x20	11	Nitro Demon	30	39	18	3808,-		C,D
			9x20	12	Nitro Edge M.Blk	40	39	-2	4220,-		D
			9x20	15	Nitro Magnum	35	39	8	4572,-		D
			9x20	96	Image Colt SUV G.Blk/Pol	38	39	2	4124,-	**OE-fit**	B,D
			9x20	97	Image Colt SUV L.Gun	38	39	2	4008,-	**OE-fit**	B,D
			9,5x20	5	Nitro Volcano G.Gun	40	39	-2	4824,-		C,D
			9,5x20	6	Nitro Volcano	40	39	-2	5164,-		C,D
			9x21	5	Nitro Volcano G.Gun	32	39	14	5540,-		C,D
			9x21	6	Nitro Volcano	32	39	14	5996,-		C,D
			9x21	24	ATS Mizar	37	39	4	8276,-		D
			9x21	25	ATS Mizar G.Blk	37	39	4	8352,-		D

Forts. neste side »

Bilmerke - Bilmodell	Årsmodell	Dimensjon	Felgdim.	Bilde	Felgmodell	ET Felg	ET Bil	Avvik ET	Veil. Pris eks. MVA	Merknader	B,C D, M
AUDI (forts.)				PCD: **5-112** Bolt - Mutter: **14x1,50B**		CB: **66,5**					
			9,5x21	5	Nitro Volcano G.Gun	40	39	-2	5540,-		C,D
			9,5x21	6	Nitro Volcano	40	39	-2	5996,-		D
			9x22	12	Nitro Edge M.Blk	40	39	-2	4888,-		D
			9x22	15	Nitro Magnum	35	39	8	5420,-		D
			9,5x22	1	Nitro Throne FF	30	39	18	6276,-		D
			10,5x22	15	Nitro Magnum	42	39	-6	5420,-	Kun bak	D,M
AUDI				PCD: **5-112** Bolt - Mutter: **14x1,50B**		CB: **66,5**					
SQ5 (8R)	10.12-12.16	19-22	8x19	2	Nitro Sapphire FF	30	33	6	4684,-		C,D
			8x19	3	Nitro Turismo FF	30	33	6	4492,-		D
			8x19	4	Nitro Turismo FF G.Gun/Pol	30	33	6	4644,-		D
			8x19	16	Advanti Inizio DST	30	33	6	4412,-		D
			8x19	26	CSP 18 G.Blk/pol	30	33	6	3596,-		D
			8x19	27	CSP 18	30	33	6	3444,-		D
			8x19	28	CSP 18 G.Blk	30	33	6	3444,-		D
			8,5x19	2	Nitro Sapphire FF	34	33	-2	4684,-		C,D
			8,5x19	96	Image Colt SUV G.Blk/Pol	28	33	10	3492,-	**OE-fit**	B,D
			8,5x19	97	Image Colt SUV L.Gun	28	33	10	3396,-	**OE-fit**	B,D
			9x19	10	Nitro Demon H.Slv	28	33	10	3624,-		C,D
			9x19	11	Nitro Demon	28	33	10	3376,-		C,D
			8,5x20	1	Nitro Throne FF	30	33	6	5060,-		D
			8,5x20	2	Nitro Sapphire FF	30	33	6	5216,-		C,D
			8,5x20	11	Nitro Demon	25	33	16	3808,-		C,D
			8,5x20	24	ATS Mizar	29	33	8	5948,-		D
			8,5x20	25	ATS Mizar G.Blk	29	33	8	6020,-		D
			9x20	2	Nitro Sapphire FF	30	33	6	5216,-		C,D
			9x20	3	Nitro Turismo FF	30	33	6	4960,-		D
			9x20	4	Nitro Turismo FF G.Gun/Pol	30	33	6	5048,-		D
			9x20	5	Nitro Volcano G.Gun	25	33	16	4824,-		C,D
			9x20	6	Nitro Volcano	25	33	16	5164,-		C,D
			9x20	10	Nitro Demon H.Slv	30	33	6	4104,-		C,D
			9x20	11	Nitro Demon	30	33	6	3808,-		C,D
			9x20	15	Nitro Magnum	28	33	10	4572,-		D
			9x20	96	Image Colt SUV G.Blk/Pol	33	33	0	4124,-	**OE-fit**	B,D
			9x20	97	Image Colt SUV L.Gun	33	33	0	4008,-	**OE-fit**	B,D
			9,5x20	10	Nitro Demon H.Slv	30	33	6	4104,-		C,D
			9,5x20	11	Nitro Demon	30	33	6	3808,-		C,D
			9x21	5	Nitro Volcano G.Gun	25	33	16	5540,-		C,D
			9x21	6	Nitro Volcano	25	33	16	5996,-		C,D
			9x22	15	Nitro Magnum	28	33	10	5420,-		D
			9,5x22	1	Nitro Throne FF	30	33	6	6276,-		D
AUDI				PCD: **5-112** Bolt - Mutter: **14x1,50B**		CB: **66,5**					
SQ5 (FY)	07.17-	19-22	8x19	2	Nitro Sapphire FF	30	34	8	4684,-		C,D
			8x19	3	Nitro Turismo FF	30	34	8	4492,-		D
			8x19	4	Nitro Turismo FF G.Gun/Pol	30	34	8	4644,-		D
			8x19	10	Nitro Demon H.Slv	35	34	-2	3624,-		C,D
			8x19	11	Nitro Demon	35	34	-2	3376,-		C,D
			8x19	16	Advanti Inizio DST	30	34	8	4412,-		D
			8x19	26	CSP 18 G.Blk/pol	30	34	8	3596,-		D
			8x19	27	CSP 18	30	34	8	3444,-		D
			8x19	28	CSP 18 G.Blk	30	34	8	3444,-		D
			8x19	48	Image Motion	35	34	-2	2532,-		D
			8x19	49	Image Motion G.Gun	35	34	-2	2532,-		D
			8,5x19	2	Nitro Sapphire FF	34	34	0	4684,-		C,D
			8,5x19	5	Nitro Volcano G.Gun	32	34	4	4388,-		C,D
			8,5x19	6	Nitro Volcano	32	34	4	4632,-		C,D
			8,5x19	9	Nitro Sabre G.Blk	35	34	-2	4292,-	**OE-fit**	B,C,D
			8,5x19	96	Image Colt SUV G.Blk/Pol	28	34	12	3492,-	**OE-fit**	B,D
			8,5x19	97	Image Colt SUV L.Gun	28	34	12	3396,-	**OE-fit**	B,D
			8,5x20	1	Nitro Throne FF	30	34	8	5060,-		D
			8,5x20	2	Nitro Sapphire FF	30	34	8	5216,-		C,D
			8,5x20	9	Nitro Sabre G.Blk	35	34	-2	4800,-	**OE-fit**	B,C,D
			8,5x20	10	Nitro Demon H.Slv	38	34	-8	4104,-		C,D
			8,5x20	11	Nitro Demon	38	34	-8	3808,-		C,D
			8,5x20	24	ATS Mizar	29	34	10	5948,-		D
			8,5x20	25	ATS Mizar G.Blk	29	34	10	6020,-		D
			9x20	2	Nitro Sapphire FF	30	34	8	5216,-		C,D
			9x20	3	Nitro Turismo FF	30	34	8	4960,-		D
			9x20	4	Nitro Turismo FF G.Gun/Pol	30	34	8	5048,-		D
			9x20	5	Nitro Volcano G.Gun	32	34	4	4824,-		C,D
			9x20	6	Nitro Volcano	32	34	4	5164,-		C,D
			9x20	96	Image Colt SUV G.Blk/Pol	33	34	2	4124,-	**OE-fit**	B,D
			9x20	97	Image Colt SUV L.Gun	33	34	2	4008,-	**OE-fit**	B,D
			9,5x20	10	Nitro Demon H.Slv	30	34	8	4104,-		D,M
			9,5x20	11	Nitro Demon	30	34	8	3808,-		D,M
			9x21	5	Nitro Volcano G.Gun	32	34	4	5540,-		C,D
			9x21	6	Nitro Volcano	32	34	4	5996,-		C,D
			9,5x22	1	Nitro Throne FF	30	34	8	6276,-		D
AUDI				PCD: **5-112** Bolt - Mutter: **14x1,50B**		CB: **66,5**					
E-tron (GE)	01.19-	19-22	8,5x19	2	Nitro Sapphire FF	34	36	4	4684,-	**OE-fit**	B,C,D
			8,5x19	3	Nitro Turismo FF	35	36	2	4492,-		D
			8,5x19	4	Nitro Turismo FF G.Gun/Pol	35	36	2	4644,-		D
			8,5x19	96	Image Colt SUV G.Blk/Pol	34	36	4	3492,-	**OE-fit**	B,D
			8,5x19	97	Image Colt SUV L.Gun	34	36	4	3396,-	**OE-fit**	B,D
			9x19	10	Nitro Demon H.Slv	28	36	16	3624,-		C,D
			9x19	11	Nitro Demon	28	36	16	3376,-		C,D

Forts. neste side »

Bilmerke - Bilmodell	Årsmodell	Dimensjon	Felgdim.	Bilde	Felgmodell	ET Felg	ET Bil	Avvik ET	Veil. Pris eks. MVA	Merknader	B,C D, M
AUDI (forts.)			PCD: **5-112** Bolt - Mutter: **14x1,50B** CB: **66,5**								
			9x19	12	Nitro Edge M.Blk	25	36	22	3884,-		D
			9x19	91	Nitro Demon Slv	28	36	16	3376,-	**OE-fit**	B,C,D
			8,5x20	1	Nitro Throne FF	30	36	12	5060,-		D
			9x20	1	Nitro Throne FF	35	36	2	5060,-		D
			9x20	2	Nitro Sapphire FF	38	36	-4	5216,-	**OE-fit**	B,C,D
			9x20	3	Nitro Turismo FF	30	36	12	4960,-		D
			9x20	4	Nitro Turismo FF G.Gun/Pol	30	36	12	5048,-		D
			9x20	10	Nitro Demon H.Slv	33	36	6	4104,-	**OE-fit**	B,C,D
			9x20	11	Nitro Demon	30	36	12	3808,-		C,D
			9x20	12	Nitro Edge M.Blk	25	36	22	4220,-		D
			9x20	15	Nitro Magnum	35	36	2	4572,-		D
			9x20	96	Image Colt SUV G.Blk/Pol	38	36	-4	4124,-	**OE-fit**	B,D
			9x20	97	Image Colt SUV L.Gun	38	36	-4	4008,-	**OE-fit**	B,D
			9,5x20	3	Nitro Turismo FF	30	36	12	4960,-		D
			9,5x20	4	Nitro Turismo FF G.Gun/Pol	30	36	12	5048,-		D
			9,5x20	10	Nitro Demon H.Slv	30	36	12	4104,-		C,D
			9,5x20	11	Nitro Demon	30	36	12	3808,-		C,D
			9x22	15	Nitro Magnum	35	36	2	5420,-		D
			9,5x22	1	Nitro Throne FF	35	36	2	6276,-		D
AUDI			PCD: **5-130** Bolt - Mutter: **14x1,50B** CB: **71,5**								
Q7 (4L)	12.05-05.15	18-22	9x19	12	Nitro Edge M.Blk	50	53	6	3884,-		D
			9x20	3	Nitro Turismo FF	50	53	6	4960,-	**OE-fit**	B,D
			9x20	4	Nitro Turismo FF G.Gun/Pol	50	53	6	5048,-	**OE-fit**	B,D
			9x20	12	Nitro Edge M.Blk	50	53	6	4220,-		D
			9x20	15	Nitro Magnum	40	53	26	4572,-		D
			10x20	12	Nitro Edge M.Blk	48	53	10	4220,-		D
			9x22	12	Nitro Edge M.Blk	50	53	6	4888,-		D
			9x22	15	Nitro Magnum	40	53	26	5420,-		D
			10x22	12	Nitro Edge M.Blk	48	53	10	4888,-		D
			10,5x22	15	Nitro Magnum	48	53	10	5420,-	Kun bak	D,M
AUDI			PCD: **5-112** Bolt - Mutter: **14x1,50B** CB: **66,5**								
Q7 (4L)	06.15-	18-22	8,5x19	96	Image Colt SUV G.Blk/Pol	28	31	6	3492,-	**OE-fit**	B,D
55 TFSI e, 60 TFSI e 19"			8,5x19	97	Image Colt SUV L.Gun	28	31	6	3396,-	**OE-fit**	B,D
SQ7 (4L)	04.16-	20-22	9x19	10	Nitro Demon H.Slv	28	31	6	3624,-		C,D
			9x19	11	Nitro Demon	28	31	6	3376,-		C,D
			9x19	12	Nitro Edge M.Blk	25	31	12	3884,-		D
			9x19	91	Nitro Demon Slv	28	31	6	3376,-	**OE-fit**	B,C,D
			8,5x20	1	Nitro Throne FF	30	31	2	5060,-		D
			9x20	2	Nitro Sapphire FF	30	31	2	5216,-		C,D
			9x20	3	Nitro Turismo FF	26	31	10	4960,-	**OE-fit**	B,D
			9x20	4	Nitro Turismo FF G.Gun/Pol	26	31	10	5048,-	**OE-fit**	B,D
			9x20	5	Nitro Volcano G.Gun	32	31	-2	4824,-		C,D
			9x20	6	Nitro Volcano	32	31	-2	5164,-		C,D
			9x20	10	Nitro Demon H.Slv	33	31	-4	4104,-	**OE-fit**	B,C,D
			9x20	11	Nitro Demon	30	31	2	3808,-		C,D
			9x20	12	Nitro Edge M.Blk	25	31	12	4220,-		D
			9x20	15	Nitro Magnum	28	31	6	4572,-		D
			9x20	96	Image Colt SUV G.Blk/Pol	33	31	-4	4124,-	**OE-fit**	B,D
			9x20	97	Image Colt SUV L.Gun	33	31	-4	4008,-	**OE-fit**	B,D
			9,5x20	3	Nitro Turismo FF	30	31	2	4960,-		D
			9,5x20	4	Nitro Turismo FF G.Gun/Pol	30	31	2	5048,-		D
			9,5x20	10	Nitro Demon H.Slv	30	31	2	4104,-		C,D
			9,5x20	11	Nitro Demon	30	31	2	3808,-		C,D
			10x20	1	Nitro Throne FF	30	31	2	5308,-		D
			10x20	12	Nitro Edge M.Blk	30	31	2	4220,-		D
			10,5x20	5	Nitro Volcano G.Gun	30	31	2	4824,-		C,D
			10,5x20	6	Nitro Volcano	30	31	2	5164,-		C,D
			9x21	5	Nitro Volcano G.Gun	32	31	-2	5540,-		C,D
			9x21	6	Nitro Volcano	32	31	-2	5996,-		C,D
			10x21	24	ATS Mizar	30	31	2	9016,-		D
			10x21	25	ATS Mizar G.Blk	30	31	2	9156,-		D
			10,5x21	5	Nitro Volcano G.Gun	30	31	2	5540,-		C,D
			10,5x21	6	Nitro Volcano	30	31	2	5996,-		C,D
			9x22	15	Nitro Magnum	28	31	6	5420,-		D
			9,5x22	1	Nitro Throne FF	25	31	12	6276,-		D
			10x22	12	Nitro Edge M.Blk	30	31	2	4888,-		D
			10,5x22	1	Nitro Throne FF	30	31	2	6572,-		D,M
			10,5x22	15	Nitro Magnum	30	31	2	5420,-		D,M
AUDI			PCD: **5-112** Bolt - Mutter: **14x1,50B** CB: **66,5**								
Q8 (4L)	08.18-	19-23	8,5x19	2	Nitro Sapphire FF	20	21	2	4684,-		C,D
SQ8 (4L)	09.19-	20-23	8,5x19	96	Image Colt SUV G.Blk/Pol	20	21	2	3492,-	**OE-fit**	B,D
			8,5x19	97	Image Colt SUV L.Gun	20	21	2	3396,-	**OE-fit**	B,D
			9x19	3	Nitro Turismo FF	20	21	2	4660,-		D
			9x19	4	Nitro Turismo FF G.Gun/Pol	20	21	2	4812,-		D
			9x19	12	Nitro Edge M.Blk	25	21	-8	3884,-		D
			8,5x20	1	Nitro Throne FF	20	21	2	5060,-		D
			9x20	2	Nitro Sapphire FF	20	21	2	5216,-		C,D
			9x20	12	Nitro Edge M.Blk	25	21	-8	4220,-		D
			9x20	96	Image Colt SUV G.Blk/Pol	20	21	2	4124,-	**OE-fit**	B,D
			9x20	97	Image Colt SUV L.Gun	20	21	2	4008,-	**OE-fit**	B,D
			9,5x20	3	Nitro Turismo FF	20	21	2	4960,-		D
			9,5x20	4	Nitro Turismo FF G.Gun/Pol	20	21	2	5048,-		D
			10x20	3	Nitro Turismo FF	19	21	4	5116,-	**OE-fit**	B,D
			10x20	4	Nitro Turismo FF G.Gun/Pol	19	21	4	5288,-	**OE-fit**	B,D
			10x20	12	Nitro Edge M.Blk	21	21	0	4220,-		D

Forts. neste side »

Bilmerke - Bilmodell	Årsmodell	Dimensjon	Felgdim.	Bilde	Felgmodell	ET Felg	ET Bil	Avvik ET	Veil. Pris eks. MVA	Merknader	B,C D, M
AUDI (forts.)				PCD: **5-112** Bolt - Mutter: **14x1,50B** CB: **66,5**							
			10x22	12	Nitro Edge M.Blk	21	21	0	4888,-		D
			10,5x22	1	Nitro Throne FF	20	21	2	6572,-		D
AUDI				PCD: **5-112** Bolt - Mutter: **14x1,50B** CB: **66,5**							
RSQ8 (4L)	12.19-	22-23	10,5x22	1	Nitro Throne FF	20	18	-4	6572,-		D
BENTLEY				PCD: **5-112** Bolt - Mutter: **14x1,50B** CB: **57,1**							
Continental (3W) GT	11.10-06.18	20-22	9x20	5	Nitro Volcano G.Gun	40	43	6	4824,-		
Continental Flying Spur	09.02-	19-22	9x20	6	Nitro Volcano	40	43	6	5164,-		
Continental GT	09.02-10.10	19-22	9x20	10	Nitro Demon H.Slv	30	43	26	4104,-		
Continental GTC	09.02-06.18	19-22	9x20	11	Nitro Demon	30	43	26	3808,-		
			9,5x20	10	Nitro Demon H.Slv	30	43	26	4104,-	Kun bak	
			9,5x20	11	Nitro Demon	30	43	26	3808,-	Kun bak	
			10,5x20	5	Nitro Volcano G.Gun	42	43	2	4824,-	Kun bak	
			10,5x20	6	Nitro Volcano	42	43	2	5164,-	Kun bak	
			9x21	5	Nitro Volcano G.Gun	40	43	6	5540,-		
			9x21	6	Nitro Volcano	40	43	6	5996,-		
			10,5x21	5	Nitro Volcano G.Gun	42	43	2	5540,-	Kun bak	
			10,5x21	6	Nitro Volcano	42	43	2	5996,-	Kun bak	
BENTLEY				PCD: **5-130** Bolt - Mutter: **14x1,50** CB: **71,5**							
Mulsanne (3Y)	06.10-	20-22	9x20	3	Nitro Turismo FF	50	61	22	4960,-	**OE-fit**	B,D
			9x20	4	Nitro Turismo FF G.Gun/Pol	50	61	22	5048,-	**OE-fit**	B,D
BMW				PCD: **5-120** Bolt - Mutter: **12x1,50B** CB: **72,5**							
1-Series (E82) coupe	11.07-02.14	16-20	6,5x16	26	CSP 18 G.Blk/pol	33	42	18	1896,-	**OE-fit**	B,C,D
123d, 125i 17"			6,5x16	27	CSP 18	33	42	18	1760,-	**OE-fit**	B,C,D
135i 17"			6,5x16	28	CSP 18 G.Blk	33	42	18	1760,-	**OE-fit**	B,C,D
1-Series (E87)	09.04-09.11	16-20	7x16	22	ATS Evolution	40	42	4	1808,-	**OE-fit**	B,C,D
123d 17"			7x16	23	ATS Evolution G.Grey	40	42	4	1884,-	**OE-fit**	B,C,D
130i 17"			7,5x17	22	ATS Evolution	43	42	-2	2268,-	**OE-fit**	B,C,D
1-Series (E88) cab	03.08-02.15	16-20	7,5x17	23	ATS Evolution G.Grey	43	42	-2	2340,-	**OE-fit**	B,C,D
123d, 125i 17"			7,5x17	26	CSP 18 G.Blk/pol	43	42	-2	2272,-	**OE-fit**	B,C,D
135i 17"			7,5x17	27	CSP 18	43	42	-2	2200,-	**OE-fit**	B,C,D
			7,5x17	28	CSP 18 G.Blk	43	42	-2	2200,-	**OE-fit**	B,C,D
			8x18	11	Nitro Demon	40	42	4	2784,-		D
			8x18	22	ATS Evolution	43	42	-2	3016,-	**OE-fit**	B,C,D
			8x18	23	ATS Evolution G.Grey	43	42	-2	3116,-	**OE-fit**	B,C,D
			8x18	26	CSP 18 G.Blk/pol	45	42	-6	2956,-	**OE-fit**	B,C,D
			8x18	27	CSP 18	45	42	-6	2972,-	**OE-fit**	B,C,D
			8x18	28	CSP 18 G.Blk	45	42	-6	2972,-	**OE-fit**	B,C,D
			8x19	4	Nitro Turismo FF G.Gun/Pol	40	42	4	4644,-	**OE-fit**	B,C,D
			8x19	11	Nitro Demon	40	42	4	3376,-		D
			9x19	4	Nitro Turismo FF G.Gun/Pol	47	42	-10	4812,-	**OE-fit**, kun bak	B,C,D,M
			9x19	11	Nitro Demon	45	42	-6	3376,-	Kun bak	D
			8,5x20	11	Nitro Demon	40	42	4	3808,-		D
BMW				PCD: **5-120** Bolt - Mutter: **14x1,25B** CB: **72,5**							
1-Series (F20) 5-door	10.11-08.19	16-20	6,5x16	26	CSP 18 G.Blk/pol	33	43	20	1896,-	**OE-fit**	B,C,D
125d, 125i 17"			6,5x16	27	CSP 18	33	43	20	1760,-	**OE-fit**	B,C,D
M135i, M140i 18"			6,5x16	28	CSP 18 G.Blk	33	43	20	1760,-	**OE-fit**	B,C,D
1-Series (F21) 3-door	08.12-	16-20	7x16	22	ATS Evolution	40	43	6	1808,-	**OE-fit**	B,C,D
125d, 125i 17"			7x16	23	ATS Evolution G.Grey	40	43	6	1884,-	**OE-fit**	B,C,D
M135i, M140i 18"			7,5x17	22	ATS Evolution	43	43	0	2268,-	**OE-fit**	B,C,D
2-Series (F22) coupe	10.13-10.19	16-20	7,5x17	23	ATS Evolution G.Grey	43	43	0	2340,-	**OE-fit**	B,C,D
225d, 225i, 228i 17"			7,5x17	26	CSP 18 G.Blk/pol	43	43	0	2272,-	**OE-fit**	B,C,D
M235i 18"			7,5x17	27	CSP 18	43	43	0	2200,-	**OE-fit**	B,C,D
2-Series (F23) cab	01.14-	16-20	7,5x17	28	CSP 18 G.Blk	43	43	0	2200,-	**OE-fit**	B,C,D
225d, 228i 17"			8x18	11	Nitro Demon	40	43	6	2784,-		D
M235i 18"			8x18	22	ATS Evolution	43	43	0	3016,-	**OE-fit**	B,C,D
			8x18	23	ATS Evolution G.Grey	43	43	0	3116,-	**OE-fit**	B,C,D
			8x18	26	CSP 18 G.Blk/pol	45	43	-4	2956,-	**OE-fit**	B,C,D
			8x18	27	CSP 18	45	43	-4	2972,-	**OE-fit**	B,C,D
			8x18	28	CSP 18 G.Blk	45	43	-4	2972,-	**OE-fit**	B,C,D
			8x19	4	Nitro Turismo FF G.Gun/Pol	40	43	6	4644,-	**OE-fit**	B,C,D
			8x19	11	Nitro Demon	40	43	6	3376,-		D
			9x19	4	Nitro Turismo FF G.Gun/Pol	47	53	12	4812,-	**OE-fit**, kun bak	B,C,D,M
			9x19	11	Nitro Demon	45	53	16	3376,-	Kun bak	D,M
			8,5x20	11	Nitro Demon	40	43	6	3808,-		D,M
BMW				PCD: **5-120** Bolt - Mutter: **14x1,25B** CB: **72,5**							
1-Series (F20) M135i	07.14-08.19	17-20	7,5x17	22	ATS Evolution	43	43	0	2268,-	**OE-fit**	B,C,D
M135i			7,5x17	23	ATS Evolution G.Grey	43	43	0	2340,-	**OE-fit**	B,C,D
M140i			8x18	11	Nitro Demon	40	43	6	2784,-		D
1-Series (F21) M135i	07.14-	17-20	8x18	22	ATS Evolution	43	43	0	3016,-	**OE-fit**	B,C,D
M135i			8x18	23	ATS Evolution G.Grey	43	43	0	3116,-	**OE-fit**	B,C,D
M140i			8x19	4	Nitro Turismo FF G.Gun/Pol	40	43	6	4644,-	**OE-fit**	B,C,D
2-Series (F22) coupe M235i	07.16-10.19	17-20	8x19	11	Nitro Demon	40	43	6	3376,-		D
M240i			9x19	4	Nitro Turismo FF G.Gun/Pol	47	52	10	4812,-	**OE-fit**, kun bak	B,C,D,M
2-Series (F23) cab M235i	07.16-	17-20	8,5x20	11	Nitro Demon	40	43	6	3808,-		D,M
M240i											
BMW				PCD: **5-112** Bolt - Mutter: **14x1,25B** CB: **66,5**							
1-Series (F40) 5-door	09.19-	16-20	6,5x16	36	Image Colt	45	54	18	1624,-		D
120d 17"			6,5x16	92	Image Colt L.Gun	45	54	18	1548,-		D
M135i 18"			7x16	22	ATS Evolution	52	54	4	1808,-	**OE-fit**	B,C,D
2-Series (F44) gran coupe	11.19-	17-20	7x16	23	ATS Evolution G.Grey	52	54	4	1884,-	**OE-fit**	B,C,D
M235i 18"			7x16	46	Image Stella	47	54	14	1548,-	**OE-fit**	B,D
			7x16	47	Image Stella M.Blk	47	54	14	1548,-	**OE-fit**	B,D
			7x16	48	Image Motion	47	54	14	1468,-	**OE-fit**	B,D
			7x16	49	Image Motion G.Gun	47	54	14	1468,-	**OE-fit**	B,D

Forts. neste side »

Bilmerke - Bilmodell	Årsmodell	Dimensjon	Felgdim.	Bilde	Felgmodell	ET Felg	ET Bil	Avvik ET	Veil. Pris eks. MVA	Merknader	B,C D, M
BMW (forts.)			PCD: **5-112** Bolt - Mutter: **14x1,25B** CB: **66,5**								
			7x16	50	Image Legend	45	54	18	1544,-		D
			7x17	48	Image Motion	47	54	14	1736,-	**OE-fit**	B,D
			7x17	49	Image Motion G.Gun	47	54	14	1736,-	**OE-fit**	B,D
			7,5x17	9	Nitro Sabre G.Blk	45	54	18	3052,-		D
			7,5x17	22	ATS Evolution	52	54	4	2268,-	**OE-fit**	B,C,D
			7,5x17	23	ATS Evolution G.Grey	52	54	4	2340,-	**OE-fit**	B,C,D
			7,5x17	26	CSP 18 G.Blk/pol	52	54	4	2272,-	**OE-fit**	B,C,D
			7,5x17	27	CSP 18	52	54	4	2200,-	**OE-fit**	B,C,D
			7,5x17	28	CSP 18 G.Blk	52	54	4	2200,-	**OE-fit**	B,C,D
			7,5x17	36	Image Colt	45	54	18	1956,-		D
			7,5x17	46	Image Stella	52	54	4	1812,-	**OE-fit**	B,D
			7,5x17	47	Image Stella M.Blk	52	54	4	1812,-	**OE-fit**	B,D
			7,5x17	50	Image Legend	47	54	14	1812,-	**OE-fit**	B,D
			7,5x17	92	Image Colt L.Gun	45	54	18	1876,-		D
			7,5x17	230	Breyton BR-I Slv	52	54	4	2196,-	**OE-fit**	B,C,D
			7,5x17	231	Breyton BR-I M.Blk	52	54	4	2196,-	**OE-fit**	B,C,D
			8x17	17	BM Drive M.Gun	45	54	18	1736,-		D
			8x17	48	Image Motion	45	54	18	1736,-		D
			7,5x18	2	Nitro Sapphire FF	48	54	12	3944,-		D
			7,5x18	22	ATS Evolution	51	54	6	3016,-	**OE-fit**	B,C,D
			7,5x18	23	ATS Evolution G.Grey	51	54	6	3116,-	**OE-fit**	B,C,D
			7,5x18	46	Image Stella	52	54	4	2276,-	**OE-fit**	B,D
			7,5x18	47	Image Stella M.Blk	52	54	4	2276,-	**OE-fit**	B,D
			7,5x18	230	Breyton BR-I Slv	51	54	6	2348,-	**OE-fit**	B,C,D
			7,5x18	231	Breyton BR-I M.Blk	51	54	6	2348,-	**OE-fit**	B,C,D
			8x18	7	Nitro Spark G.Blk/Grey	45	54	18	3476,-		D
			8x18	8	Nitro Spark G.Blk/Red	45	54	18	3476,-		D
			8x18	9	Nitro Sabre G.Blk	45	54	18	3496,-		D
			8x18	10	Nitro Demon H.Slv	47	54	14	2972,-		D
			8x18	11	Nitro Demon	47	54	14	2784,-		D
			8x18	16	Advanti Inizio DST	45	54	18	3828,-		D
			8x18	17	BM Drive M.Gun	45	54	18	2296,-		D
			8x18	22	ATS Evolution	57	54	-6	3016,-	**OE-fit**	B,C,D
			8x18	23	ATS Evolution G.Grey	57	54	-6	3116,-	**OE-fit**	B,C,D
			8x18	26	CSP 18 G.Blk/pol	47	54	14	2956,-	**OE-fit**	B,C,D
			8x18	27	CSP 18	47	54	14	2972,-	**OE-fit**	B,C,D
			8x18	28	CSP 18 G.Blk	47	54	14	2972,-	**OE-fit**	B,C,D
			8x18	36	Image Colt	45	54	18	2412,-		D
			8x18	48	Image Motion	45	54	18	2204,-		D
			8x18	50	Image Legend	47	54	14	2276,-	**OE-fit**	B,D
			8x18	92	Image Colt L.Gun	45	54	18	2296,-		D
			7,5x19	2	Nitro Sapphire FF	48	54	12	4572,-		D
			8x19	4	Nitro Turismo FF G.Gun/Pol	47	54	14	4644,-	**OE-fit**	B,C,D
			8x19	10	Nitro Demon H.Slv	47	54	14	3624,-		D
			8x19	11	Nitro Demon	47	54	14	3376,-		D
			8x19	16	Advanti Inizio DST	45	54	18	4412,-		D
			8x19	22	ATS Evolution	47	54	14	3892,-	**OE-fit**	B,C,D
			8x19	23	ATS Evolution G.Grey	47	54	14	4008,-	**OE-fit**	B,C,D
			8x19	26	CSP 18 G.Blk/pol	47	54	14	3596,-	**OE-fit**	B,C,D
			8x19	27	CSP 18	47	54	14	3444,-	**OE-fit**	B,C,D
			8x19	28	CSP 18 G.Blk	47	54	14	3444,-	**OE-fit**	B,C,D
			8x19	48	Image Motion	45	54	18	2532,-		D
			8x19	230	Breyton BR-I Slv	47	54	14	2896,-	**OE-fit**	B,C,D
			8x19	231	Breyton BR-I M.Blk	47	54	14	2896,-	**OE-fit**	B,C,D
			8,5x19	5	Nitro Volcano G.Gun	45	54	18	4388,-		D,M
			8,5x19	6	Nitro Volcano	45	54	18	4632,-		D,M
			8,5x19	9	Nitro Sabre G.Blk	45	54	18	4292,-		D,M
			8,5x19	36	Image Colt	45	54	18	3028,-		D,M
			8,5x19	92	Image Colt L.Gun	45	54	18	2876,-		D,M
			8x20	2	Nitro Sapphire FF	48	54	12	5096,-		D
			8x20	4	Nitro Turismo FF G.Gun/Pol	47	54	14	4964,-	**OE-fit**	B,C,D
			8,5x20	5	Nitro Volcano G.Gun	45	54	18	4824,-		D,M
			8,5x20	6	Nitro Volcano	45	54	18	5164,-		D,M
			8,5x20	7	Nitro Spark G.Blk/Grey	45	54	18	4660,-		D,M
			8,5x20	8	Nitro Spark G.Blk/Red	45	54	18	4660,-		D,M
			8,5x20	9	Nitro Sabre G.Blk	45	54	18	4800,-		D,M
			8,5x20	36	Image Colt	45	54	18	3432,-		D,M
			8,5x20	92	Image Colt L.Gun	45	54	18	3276,-		D,M
BMW			PCD: **5-120** Bolt - Mutter: **14x1,25B** CB: **72,5**								
M2 (F87) coupe	01.16-	18-21	8,5x19	5	Nitro Volcano G.Gun	30	29	-2	4388,-	**OE-fit**	B,C,D
			8,5x19	6	Nitro Volcano	30	29	-2	4632,-	**OE-fit**	B,C,D
			9x19	3	Nitro Turismo FF	25	29	8	4660,-	**OE-fit**	B,C,D
			9x19	4	Nitro Turismo FF G.Gun/Pol	25	29	8	4812,-	**OE-fit**	B,C,D
			9,5x19	5	Nitro Volcano G.Gun	40	40	0	4388,-	**OE-fit**, kun bak	B,C,D
			9,5x19	6	Nitro Volcano	40	40	0	4632,-	**OE-fit**, kun bak	B,C,D
			10x19	3	Nitro Turismo FF	40	40	0	4812,-	**OE-fit**, kun bak	B,C,D
			10x19	4	Nitro Turismo FF G.Gun/Pol	40	40	0	4964,-	**OE-fit**, kun bak	B,C,D
			8,5x20	5	Nitro Volcano G.Gun	30	29	-2	4824,-	**OE-fit**	B,C,D
			8,5x20	6	Nitro Volcano	30	29	-2	5164,-	**OE-fit**	B,C,D
			9x20	5	Nitro Volcano G.Gun	32	29	-6	4824,-	**OE-fit**	B,C,D
			9x20	6	Nitro Volcano	32	29	-6	5164,-	**OE-fit**	B,C,D
			10,5x20	5	Nitro Volcano G.Gun	42	40	-4	4824,-	**OE-fit**, kun bak	B,C,D
			10,5x20	6	Nitro Volcano	42	40	-4	5164,-	**OE-fit**, kun bak	B,C,D
			9x21	5	Nitro Volcano G.Gun	32	29	-6	5540,-	**OE-fit**	B,C,D
			9x21	6	Nitro Volcano	32	29	-6	5996,-	**OE-fit**	B,C,D
			10,5x21	5	Nitro Volcano G.Gun	42	40	-4	5540,-	**OE-fit**, kun bak	B,C,D
			10,5x21	6	Nitro Volcano	42	40	-4	5996,-	**OE-fit**, kun bak	B,C,D

Bilmerke - Bilmodell	Årsmodell	Dimensjon	Felgdim.	Bilde	Felgmodell	ET Felg	ET Bil	Avvik ET	Veil. Pris eks. MVA	Merknader	B,C D, M
BMW				PCD: **5-112** Bolt - Mutter: **14x1,25B**		CB: **66,5**					
i3 (I-1)	09.13-	19-20	5x19	76	CSP 10	43	43	0	2812,-	**OE-fit**	B,C,D
			5x19	77	CSP 10 M.Blk	43	43	0	2812,-	**OE-fit**	B,C,D
BMW				PCD: **5-112** Bolt - Mutter: **14x1,25B**		CB: **66,5**					
i3 (I-1) S	11.17-	19-20	5x19	76	CSP 10	28	28	0	2812,-	**OE-fit**	B,C,D
			5x19	77	CSP 10 M.Blk	28	28	0	2812,-	**OE-fit**	B,C,D
BMW				PCD: **5-112** Bolt - Mutter: **14x1,25B**		CB: **66,5**					
2-Series (F45) active tourer	09.14-	16-20	6,5x16	26	CSP 18 G.Blk/pol	46	47	2	1896,-	**OE-fit**	B,C,D
225i, 225xe 17"			6,5x16	27	CSP 18	46	47	2	1760,-	**OE-fit**	B,C,D
2-Series (F46) gran tourer	02.15-	16-20	6,5x16	28	CSP 18 G.Blk	46	47	2	1760,-	**OE-fit**	B,C,D
220d, 220i 17"			6,5x16	36	Image Colt	45	47	4	1624,-		D
			6,5x16	92	Image Colt L.Gun	45	47	4	1548,-		D
			7x16	22	ATS Evolution	52	47	-10	1808,-	**OE-fit**	B,C,D
			7x16	23	ATS Evolution G.Grey	52	47	-10	1884,-	**OE-fit**	B,C,D
			7x16	46	Image Stella	47	47	0	1548,-	**OE-fit**	B,D
			7x16	47	Image Stella M.Blk	47	47	0	1548,-	**OE-fit**	B,D
			7x16	48	Image Motion	47	47	0	1468,-	**OE-fit**	B,D
			7x16	49	Image Motion G.Gun	47	47	0	1468,-	**OE-fit**	B,D
			7x17	48	Image Motion	47	47	0	1736,-	**OE-fit**	B,D
			7x17	49	Image Motion G.Gun	47	47	0	1736,-	**OE-fit**	B,D
			7,5x17	9	Nitro Sabre G.Blk	45	47	4	3052,-		D
			7,5x17	22	ATS Evolution	52	47	-10	2268,-	**OE-fit**	B,C,D
			7,5x17	23	ATS Evolution G.Grey	52	47	-10	2340,-	**OE-fit**	B,C,D
			7,5x17	26	CSP 18 G.Blk/pol	52	47	-10	2272,-	**OE-fit**	B,C,D
			7,5x17	27	CSP 18	52	47	-10	2200,-	**OE-fit**	B,C,D
			7,5x17	28	CSP 18 G.Blk	52	47	-10	2200,-	**OE-fit**	B,C,D
			7,5x17	36	Image Colt	45	47	4	1956,-		D
			7,5x17	46	Image Stella	52	47	-10	1812,-	**OE-fit**	B,D
			7,5x17	47	Image Stella M.Blk	52	47	-10	1812,-	**OE-fit**	B,D
			7,5x17	50	Image Legend	47	47	0	1812,-	**OE-fit**	B,D
			7,5x17	92	Image Colt L.Gun	45	47	4	1876,-		D
			7,5x17	230	Breyton BR-I Slv	54	47	-14	2196,-	**OE-fit**	B,C,D
			7,5x17	231	Breyton BR-I M.Blk	54	47	-14	2196,-	**OE-fit**	B,C,D
			8x17	17	BM Drive M.Gun	45	47	4	1736,-		D
			8x17	48	Image Motion	45	47	4	1736,-		D
			7,5x18	2	Nitro Sapphire FF	48	47	-2	3944,-		D
			7,5x18	22	ATS Evolution	51	47	-8	3016,-	**OE-fit**	B,C,D
			7,5x18	23	ATS Evolution G.Grey	51	47	-8	3116,-	**OE-fit**	B,C,D
			7,5x18	46	Image Stella	52	47	-10	2276,-	**OE-fit**	B,D
			7,5x18	47	Image Stella M.Blk	52	47	-10	2276,-	**OE-fit**	B,D
			7,5x18	230	Breyton BR-I Slv	51	47	-8	2348,-	**OE-fit**	B,C,D
			7,5x18	231	Breyton BR-I M.Blk	51	47	-8	2348,-	**OE-fit**	B,C,D
			8x18	7	Nitro Spark G.Blk/Grey	45	47	4	3476,-		D
			8x18	8	Nitro Spark G.Blk/Red	45	47	4	3476,-		D
			8x18	9	Nitro Sabre G.Blk	45	47	4	3496,-		D
			8x18	10	Nitro Demon H.Slv	47	47	0	2972,-		D
			8x18	11	Nitro Demon	47	47	0	2784,-		D
			8x18	16	Advanti Inizio DST	45	47	4	3828,-		D
			8x18	17	BM Drive M.Gun	45	47	4	2296,-		D
			8x18	22	ATS Evolution	57	47	-20	3016,-	**OE-fit**	B,C,D
			8x18	23	ATS Evolution G.Grey	57	47	-20	3116,-	**OE-fit**	B,C,D
			8x18	26	CSP 18 G.Blk/pol	47	47	0	2956,-	**OE-fit**	B,C,D
			8x18	27	CSP 18	47	47	0	2972,-	**OE-fit**	B,C,D
			8x18	28	CSP 18 G.Blk	47	47	0	2972,-	**OE-fit**	B,C,D
			8x18	36	Image Colt	45	47	4	2412,-		D
			8x18	48	Image Motion	45	47	4	2204,-		D
			8x18	50	Image Legend	47	47	0	2276,-	**OE-fit**	B,D
			8x18	92	Image Colt L.Gun	45	47	4	2296,-		D
			7,5x19	2	Nitro Sapphire FF	48	47	-2	4572,-		D
			8x19	4	Nitro Turismo FF G.Gun/Pol	47	47	0	4644,-	**OE-fit**	B,C,D
			8x19	10	Nitro Demon H.Slv	47	47	0	3624,-		D
			8x19	11	Nitro Demon	47	47	0	3376,-		D
			8x19	16	Advanti Inizio DST	45	47	4	4412,-		D
			8x19	22	ATS Evolution	47	47	0	3892,-	**OE-fit**	B,C,D
			8x19	23	ATS Evolution G.Grey	47	47	0	4008,-	**OE-fit**	B,C,D
			8x19	26	CSP 18 G.Blk/pol	47	47	0	3596,-	**OE-fit**	B,C,D
			8x19	27	CSP 18	47	47	0	3444,-	**OE-fit**	B,C,D
			8x19	28	CSP 18 G.Blk	47	47	0	3444,-	**OE-fit**	B,C,D
			8x19	48	Image Motion	45	47	4	2532,-		D
			8x19	230	Breyton BR-I Slv	47	47	0	2896,-	**OE-fit**	B,C,D
			8x19	231	Breyton BR-I M.Blk	47	47	0	2896,-	**OE-fit**	B,C,D
			8,5x19	9	Nitro Sabre G.Blk	45	47	4	4292,-		D,M
			8,5x19	36	Image Colt	45	47	4	3028,-		D,M
			8,5x19	92	Image Colt L.Gun	45	47	4	2876,-		D,M
			8x20	2	Nitro Sapphire FF	48	47	-2	5096,-		D
			8x20	4	Nitro Turismo FF G.Gun/Pol	47	47	0	4964,-	**OE-fit**	B,C,D
			8,5x20	9	Nitro Sabre G.Blk	45	47	4	4800,-		D,M
			8,5x20	36	Image Colt	45	47	4	3432,-		D,M
			8,5x20	92	Image Colt L.Gun	45	47	4	3276,-		D,M

Bilmerke - Bilmodell	Årsmodell	Dimensjon	Felgdim.	Bilde	Felgmodell	ET Felg	ET Bil	Avvik ET	Veil. Pris eks. MVA	Merknader	B,C D, M
BMW			PCD: **5-120** Bolt - Mutter: **12x1,50B**			CB: **72,5**					
3-Series (E36)	12.90-05.99	15-19	7x16	22	ATS Evolution	40	42	4	1808,-	**OE-fit**	B,C,D
3-Series (E46)	09.01-08.05	16-20	7x16	23	ATS Evolution G.Grey	40	42	4	1884,-	**OE-fit**	B,C,D
(09.01-08.05 kan kun			7,5x17	22	ATS Evolution	43	42	-2	2268,-	**OE-fit**	B,C,D
316i & 318i ha 15")			7,5x17	23	ATS Evolution G.Grey	43	42	-2	2340,-	**OE-fit**	B,C,D
3-Series (E46) cab	04.98-09.06	15-20	7,5x17	26	CSP 18 G.Blk/pol	43	42	-2	2272,-	**OE-fit**	B,C,D
325i, 328i 16"			7,5x17	27	CSP 18	43	42	-2	2200,-	**OE-fit**	B,C,D
330i 17"			7,5x17	28	CSP 18 G.Blk	43	42	-2	2200,-	**OE-fit**	B,D
3-Series (E46) coupe	04.98-03.05	15-20	8x18	11	Nitro Demon	40	42	4	2784,-		D
325i, 328i 16"			8x18	22	ATS Evolution	43	42	-2	3016,-	**OE-fit**	B,C,D
330i 17"			8x18	23	ATS Evolution G.Grey	43	42	-2	3116,-	**OE-fit**	B,C,D
3-Series (E46) sedan	04.98-02.05	15-20	8x18	26	CSP 18 G.Blk/pol	45	42	-6	2956,-	**OE-fit**	B,C,D
325i, 328i 16"			8x18	27	CSP 18	45	42	-6	2972,-	**OE-fit**	B,C,D
330i 17"			8x18	28	CSP 18 G.Blk	45	42	-6	2972,-	**OE-fit**	B,C,D
3-Series (E46) touring	04.98-03.05	15-20	8x19	4	Nitro Turismo FF G.Gun/Pol	40	42	4	4644,-	**OE-fit**	B,C,D
325i, 328i 16"			8x19	11	Nitro Demon	40	42	4	3376,-		D
330i 17"			9x19	4	Nitro Turismo FF G.Gun/Pol	47	42	-10	4812,-	**OE-fit**, kun bak	B,C,D,M
Z3 (E36) 3.0i	07.00-02.03	16-19	9x19	11	Nitro Demon	45	42	-6	3376,-	Kun bak	D
Z3 (E36) cab	03.96-02.03	15-19	8,5x20	11	Nitro Demon	40	42	4	3808,-		D,M
Z3 (E36) coupe	03.96-02.03	15-19	9,5x20	11	Nitro Demon	45	42	-6	3808,-	Kun bak	D,M
Z4 (E85) cab	10.02-03.09	16-20									
3.0si 17"											
Z4 (E85) coupe 3.0si	05.06-03.09	17-20									
BMW			PCD: **5-120** Bolt - Mutter: **12x1,50B**			CB: **72,5**					
3-Series (E90) sedan	03.05-09.11	16-20	6,5x16	26	CSP 18 G.Blk/pol	33	34	2	1896,-	**OE-fit**	B,C,D
325d, 330d, 330xd, 330i 17"			6,5x16	27	CSP 18	33	34	2	1760,-	**OE-fit**	B,C,D
330xi, 335i, 335d 17"			6,5x16	28	CSP 18 G.Blk	33	34	2	1760,-	**OE-fit**	B,C,D
3-Series (E91) touring	08.05-07.12	16-20	7x16	22	ATS Evolution	31	34	6	1808,-	**OE-fit**	B,C,D
325d, 325xi, 330d, 330xd 17"			7x16	23	ATS Evolution G.Grey	31	34	6	1884,-	**OE-fit**	B,C,D
330i, 330xi, 335i, 335d 17"			7,5x17	22	ATS Evolution	37	34	-6	2268,-	**OE-fit**	B,C,D
3-Series (E92) coupe	09.06-07.13	17-20	7,5x17	23	ATS Evolution G.Grey	37	34	-6	2340,-	**OE-fit**	B,C,D
3-Series (E93) cab	03.07-01.14	17-20	7,5x17	26	CSP 18 G.Blk/pol	37	34	-6	2272,-	**OE-fit**	B,C,D
X1 (E84)	09.09-08.15	17-20	7,5x17	27	CSP 18	37	34	-6	2200,-	**OE-fit**	B,C,D
			7,5x17	28	CSP 18 G.Blk	37	34	-6	2200,-	**OE-fit**	B,C,D
			7,5x17	46	Image Stella	32	34	4	1812,-	**OE-fit**	B,D
			7,5x17	47	Image Stella M.Blk	32	34	4	1812,-	**OE-fit**	B,D
			7,5x17	50	Image Legend	32	34	4	1812,-	**OE-fit**	B,D
			8x17	26	CSP 18 G.Blk/pol	30	34	8	2272,-	**OE-fit**	B,C,D
			8x17	27	CSP 18	30	34	8	2200,-	**OE-fit**	B,C,D
			8x17	28	CSP 18 G.Blk	30	34	8	2200,-	**OE-fit**	B,C,D
			8x18	11	Nitro Demon	30	34	8	2784,-		D
			8x18	22	ATS Evolution	30	34	8	3016,-	**OE-fit**	B,C,D
			8x18	23	ATS Evolution G.Grey	30	34	8	3116,-	**OE-fit**	B,C,D
			8x18	26	CSP 18 G.Blk/pol	30	34	8	2956,-	**OE-fit**	B,C,D
			8x18	27	CSP 18	30	34	8	2972,-	**OE-fit**	B,C,D
			8x18	28	CSP 18 G.Blk	30	34	8	2972,-	**OE-fit**	B,C,D
			8x18	46	Image Stella	30	34	8	2276,-	**OE-fit**	B,D
			8x18	47	Image Stella M.Blk	30	34	8	2276,-	**OE-fit**	B,D
			8x18	50	Image Legend	34	34	0	2276,-	**OE-fit**	B,D
			8x19	11	Nitro Demon	30	34	8	3376,-		D
			8x19	26	CSP 18 G.Blk/pol	30	34	8	3596,-	**OE-fit**	B,C,D
			8x19	27	CSP 18	30	34	8	3444,-	**OE-fit**	B,C,D
			8x19	28	CSP 18 G.Blk	30	34	8	3444,-	**OE-fit**	B,C,D
			8,5x19	5	Nitro Volcano G.Gun	30	34	8	4388,-	**OE-fit**	B,C,D
			8,5x19	6	Nitro Volcano	30	34	8	4632,-	**OE-fit**	B,C,D
			9x19	26	CSP 18 G.Blk/pol	40	34	-12	3596,-	**OE-fit**, kun bak	B,C,D
			9x19	27	CSP 18	40	34	-12	3444,-	**OE-fit**, kun bak	B,C,D
			9x19	28	CSP 18 G.Blk	40	34	-12	3444,-	**OE-fit**, kun bak	B,C,D
			9,5x19	5	Nitro Volcano G.Gun	40	34	-12	4388,-	**OE-fit**, kun bak	B,C,D
			9,5x19	6	Nitro Volcano	40	34	-12	4632,-	**OE-fit**, kun bak	B,C,D
			8,5x20	5	Nitro Volcano G.Gun	30	34	8	4824,-	**OE-fit**	B,C,D
			8,5x20	6	Nitro Volcano	30	34	8	5164,-	**OE-fit**	B,C,D
			8,5x20	11	Nitro Demon	30	34	8	3808,-		D
			9x20	5	Nitro Volcano G.Gun	32	34	4	4824,-	**OE-fit**	B,C,D
			9x20	6	Nitro Volcano	32	34	4	5164,-	**OE-fit**	B,C,D
			9,5x20	5	Nitro Volcano G.Gun	45	34	-22	4824,-	**OE-fit**, kun bak	B,C,D
			9,5x20	6	Nitro Volcano	45	34	-22	5164,-	Kun bak	D
			10,5x20	5	Nitro Volcano G.Gun	42	34	-16	4824,-	**OE-fit**, kun bak	B,C,D,M
			10,5x20	6	Nitro Volcano	42	34	-16	5164,-	**OE-fit**, kun bak	B,C,D,M
BMW			PCD: **5-120** Bolt - Mutter: **14x1,25B**			CB: **72,5**					
3-Series (F30) sedan	10.11-01.19	16-20	6,5x16	26	CSP 18 G.Blk/pol	33	34	2	1896,-	**OE-fit**	B,C,D
328i, 330d, 330i 17"			6,5x16	27	CSP 18	33	34	2	1760,-	**OE-fit**	B,C,D
335i, 335d, 340i 17"			6,5x16	28	CSP 18 G.Blk	33	34	2	1760,-	**OE-fit**	B,C,D
3-Series (F31) touring	08.12-07.19	16-20	7x16	22	ATS Evolution	31	34	6	1808,-	**OE-fit**	B,C,D
328i, 330d, 330i 17"			7x16	23	ATS Evolution G.Grey	31	34	6	1884,-	**OE-fit**	B,C,D
335i, 335d, 340i 17"			7,5x17	22	ATS Evolution	37	34	-6	2268,-	**OE-fit**	B,C,D
4-Series (F32) coupe	08.13-	17-20	7,5x17	23	ATS Evolution G.Grey	37	34	-6	2340,-	**OE-fit**	B,C,D
Biler med M-sportbremsar 18"			7,5x17	26	CSP 18 G.Blk/pol	37	34	-6	2272,-	**OE-fit**	B,C,D
4-Series (F33) cab	02.14-	17-20	7,5x17	27	CSP 18	37	34	-6	2200,-	**OE-fit**	B,C,D
Biler med M-sportbremsar 18"			7,5x17	28	CSP 18 G.Blk	37	34	-6	2200,-	**OE-fit**	B,C,D
4-Series (F36) gran coupe	05.14-	16-20	7,5x17	46	Image Stella	32	34	4	1812,-	**OE-fit**	B,D
Biler med M-sportbremsar,			7,5x17	47	Image Stella M.Blk	32	34	4	1812,-	**OE-fit**	B,D
blåa bremseok 18".			7,5x17	50	Image Legend	32	34	4	1812,-	**OE-fit**	B,D
			8x17	22	ATS Evolution	30	34	8	2268,-	**OE-fit**	B,C,D
			8x17	23	ATS Evolution G.Grey	30	34	8	2340,-	**OE-fit**	B,C,D
			8x17	26	CSP 18 G.Blk/pol	30	34	8	2272,-	**OE-fit**	B,C,D
			8x17	27	CSP 18	30	34	8	2200,-	**OE-fit**	B,C,D

Forts. neste side »

Bilmerke - Bilmodell	Årsmodell	Dimensjon	Felgdim.	Bilde	Felgmodell	ET Felg	ET Bil	Avvik ET	Veil. Pris eks. MVA	Merknader	B,C D, M
BMW (forts.)				PCD: **5-120** Bolt - Mutter: **14x1,25B** CB: **72,5**							
			8x17	28	CSP 18 G.Blk	30	34	8	2200,-	**OE-fit**	B,C,D
			8x18	11	Nitro Demon	30	34	8	2784,-	**OE-fit**	B,D
			8x18	22	ATS Evolution	30	34	8	3016,-	**OE-fit**	B,C,D
			8x18	23	ATS Evolution G.Grey	30	34	8	3116,-	**OE-fit**	B,C,D
			8x18	26	CSP 18 G.Blk/pol	30	34	8	2956,-	**OE-fit**	B,C,D
			8x18	27	CSP 18	30	34	8	2972,-	**OE-fit**	B,C,D
			8x18	28	CSP 18 G.Blk	30	34	8	2972,-	**OE-fit**	B,C,D
			8x18	46	Image Stella	30	34	8	2276,-	**OE-fit**	B,D
			8x18	47	Image Stella M.Blk	30	34	8	2276,-	**OE-fit**	B,D
			8x18	50	Image Legend	34	34	0	2276,-	**OE-fit**	B,D
			8x19	11	Nitro Demon	30	34	8	3376,-	**OE-fit**	B,D
			8x19	26	CSP 18 G.Blk/pol	30	34	8	3596,-	**OE-fit**	B,C,D
			8x19	27	CSP 18	30	34	8	3444,-	**OE-fit**	B,C,D
			8x19	28	CSP 18 G.Blk	30	34	8	3444,-	**OE-fit**	B,C,D
			8,5x19	5	Nitro Volcano G.Gun	30	34	8	4388,-	**OE-fit**	B,C,D
			8,5x19	6	Nitro Volcano	30	34	8	4632,-	**OE-fit**	B,C,D
			9x19	11	Nitro Demon	45	47	4	3376,-	**OE-fit**, kun bak	B,D
			9x19	22	ATS Evolution	37	34	-6	4232,-		B,C
			9x19	23	ATS Evolution G.Grey	37	34	-6	4348,-		B,C
			9x19	26	CSP 18 G.Blk/pol	40	47	14	3596,-	**OE-fit**, kun bak	B,C,D
			9x19	27	CSP 18	40	47	14	3444,-	**OE-fit**, kun bak	B,C,D
			9x19	28	CSP 18 G.Blk	40	47	14	3444,-	**OE-fit**, kun bak	B,C,D
			9,5x19	5	Nitro Volcano G.Gun	40	47	14	4388,-	**OE-fit**, kun bak	B,C,D
			9,5x19	6	Nitro Volcano	40	47	14	4632,-	**OE-fit**, kun bak	B,C,D
			8,5x20	5	Nitro Volcano G.Gun	30	34	8	4824,-	**OE-fit**	B,C,D
			8,5x20	6	Nitro Volcano	30	34	8	5164,-	**OE-fit**	B,C,D
			8,5x20	11	Nitro Demon	30	34	8	3808,-	**OE-fit**	B,D
			9x20	5	Nitro Volcano G.Gun	32	34	4	4824,-	**OE-fit**	B,C,D
			9x20	6	Nitro Volcano	32	34	4	5164,-	**OE-fit**	B,C,D
			9x20	15	Nitro Magnum	30	34	8	4572,-	**OE-fit**	B,D,M
			9,5x20	5	Nitro Volcano G.Gun	45	47	4	4824,-	**OE-fit**, kun bak	B,C,D
			9,5x20	6	Nitro Volcano	45	47	4	5164,-	**OE-fit**, kun bak	B,C,D
			9,5x20	11	Nitro Demon	45	47	4	3808,-	**OE-fit**, kun bak	B,D
			10,5x20	5	Nitro Volcano G.Gun	42	47	10	4824,-	**OE-fit**, kun bak	B,C,D,M
			10,5x20	6	Nitro Volcano	42	47	10	5164,-	**OE-fit**, kun bak	B,C,D,M
BMW				PCD: **5-120** Bolt - Mutter: **14x1,25B** CB: **72,5**							
3-Series (F34) GT	04.13-	17-21	7,5x17	26	CSP 18 G.Blk/pol	37	34	-6	2272,-	**OE-fit**	B,C,D
			7,5x17	27	CSP 18	37	34	-6	2200,-	**OE-fit**	B,C,D
			7,5x17	28	CSP 18 G.Blk	37	34	-6	2200,-	**OE-fit**	B,C,D
			7,5x17	46	Image Stella	32	34	4	1812,-	**OE-fit**	B,D
			7,5x17	47	Image Stella M.Blk	32	34	4	1812,-	**OE-fit**	B,D
			7,5x17	50	Image Legend	32	34	4	1812,-	**OE-fit**	B,D
			8x17	22	ATS Evolution	30	34	8	2268,-	**OE-fit**	B,C,D
			8x17	23	ATS Evolution G.Grey	30	34	8	2340,-	**OE-fit**	B,C,D
			8x17	26	CSP 18 G.Blk/pol	30	34	8	2272,-	**OE-fit**	B,C,D
			8x17	27	CSP 18	30	34	8	2200,-	**OE-fit**	B,C,D
			8x17	28	CSP 18 G.Blk	30	34	8	2200,-	**OE-fit**	B,C,D
			8x18	11	Nitro Demon	30	34	8	2784,-		D
			8x18	22	ATS Evolution	30	34	8	3016,-	**OE-fit**	B,C,D
			8x18	23	ATS Evolution G.Grey	30	34	8	3116,-	**OE-fit**	B,C,D
			8x18	26	CSP 18 G.Blk/pol	30	34	8	2956,-	**OE-fit**	B,C,D
			8x18	27	CSP 18	30	34	8	2972,-	**OE-fit**	B,C,D
			8x18	28	CSP 18 G.Blk	30	34	8	2972,-	**OE-fit**	B,C,D
			8x18	46	Image Stella	30	34	8	2276,-	**OE-fit**	B,D
			8x18	47	Image Stella M.Blk	30	34	8	2276,-	**OE-fit**	B,D
			8x18	50	Image Legend	34	34	0	2276,-	**OE-fit**	B,D
			8x19	11	Nitro Demon	30	34	8	3376,-		D
			8x19	26	CSP 18 G.Blk/pol	30	34	8	3596,-	**OE-fit**	B,C,D
			8x19	27	CSP 18	30	34	8	3444,-	**OE-fit**	B,C,D
			8x19	28	CSP 18 G.Blk	30	34	8	3444,-	**OE-fit**	B,C,D
			8,5x19	5	Nitro Volcano G.Gun	30	34	8	4388,-	**OE-fit**	B,C,D
			8,5x19	6	Nitro Volcano	30	34	8	4632,-	**OE-fit**	B,C,D
			9x19	22	ATS Evolution	37	34	-6	4232,-		B,C
			9x19	23	ATS Evolution G.Grey	37	34	-6	4348,-		B,C
			9x19	26	CSP 18 G.Blk/pol	40	42	4	3596,-	**OE-fit**, kun bak	B,C,D
			9x19	27	CSP 18	40	42	4	3444,-	**OE-fit**, kun bak	B,C,D
			9x19	28	CSP 18 G.Blk	40	42	4	3444,-	**OE-fit**, kun bak	B,C,D
			9,5x19	5	Nitro Volcano G.Gun	40	42	4	4388,-	**OE-fit**, kun bak	B,C,D
			9,5x19	6	Nitro Volcano	40	42	4	4632,-	**OE-fit**, kun bak	B,C,D
			8,5x20	5	Nitro Volcano G.Gun	30	34	8	4824,-	**OE-fit**	B,C,D
			8,5x20	6	Nitro Volcano	30	34	8	5164,-	**OE-fit**	B,C,D
			8,5x20	11	Nitro Demon	30	34	8	3808,-		D
			9x20	5	Nitro Volcano G.Gun	32	34	4	4824,-	**OE-fit**	B,C,D
			9x20	6	Nitro Volcano	32	34	4	5164,-	**OE-fit**	B,C,D
			9x20	15	Nitro Magnum	30	34	8	4572,-		D,M
			9,5x20	5	Nitro Volcano G.Gun	45	42	-6	4824,-	**OE-fit**, kun bak	B,C,D
			9,5x20	6	Nitro Volcano	45	42	-6	5164,-	Kun bak	D
			10,5x20	5	Nitro Volcano G.Gun	42	42	0	4824,-	**OE-fit**, kun bak	B,C,D,M
			10,5x20	6	Nitro Volcano	42	42	0	5164,-	**OE-fit**, kun bak	B,C,D,M
			9x21	5	Nitro Volcano G.Gun	32	34	4	5540,-	**OE-fit**	B,C,D
			9x21	6	Nitro Volcano	32	34	4	5996,-	**OE-fit**	B,C,D
			9,5x21	5	Nitro Volcano G.Gun	45	42	-6	5540,-	**OE-fit**, kun bak	B,C,D
			9,5x21	6	Nitro Volcano	45	42	-6	5996,-	**OE-fit**, kun bak	B,C,D
			10,5x21	5	Nitro Volcano G.Gun	42	42	0	5540,-	**OE-fit**, kun bak	B,C,D,M
			10,5x21	6	Nitro Volcano	42	42	0	5996,-	**OE-fit**, kun bak	B,C,D,M

Bilmerke - Bilmodell	Årsmodell	Dimensjon	Felgdim.	Bilde	Felgmodell	ET Felg	ET Bil	Avvik ET	Veil. Pris eks. MVA	Merknader	B,C D, M
BMW			PCD: **5-112** Bolt - Mutter: **14x1,25B**		CB: **66,5**						
3-Series (G20) sedan	02.19-	16-21	6,5x16	26	CSP 18 G.Blk/pol	22	30	16	1896,-	**OE-fit**	B,C,D
320d xDrive, 330i 17"			6,5x16	28	CSP 18 G.Blk	22	30	16	1760,-	**OE-fit**	B,C,D
3-Series (G20) sedan M340i	07.19-	18-21	7,5x17	22	ATS Evolution	27	30	6	2268,-	**OE-fit**	B,C,D
3-Series (G21) touring	08.19-	16-21	7,5x17	23	ATS Evolution G.Grey	27	30	6	2340,-	**OE-fit**	B,C,D
320d xDrive, 330d, 330i 17"320			7,5x17	26	CSP 18 G.Blk/pol	27	30	6	2272,-	**OE-fit**	B,C,D
(Biler med M-bremser 18")			7,5x17	27	CSP 18	27	30	6	2200,-	**OE-fit**	B,C,D
3-Series (G21) touring M340i	10.19-	18-21	7,5x17	28	CSP 18 G.Blk	27	30	6	2200,-	**OE-fit**	B,C,D
			7,5x17	46	Image Stella	27	30	6	1812,-	**OE-fit**	B,D
			7,5x17	47	Image Stella M.Blk	27	30	6	1812,-	**OE-fit**	B,D
			7,5x17	50	Image Legend	27	30	6	1812,-	**OE-fit**	B,D
			7,5x17	230	Breyton BR-I Slv	30	30	0	2196,-	**OE-fit**	B,C,D
			7,5x17	231	Breyton BR-I M.Blk	30	30	0	2196,-	**OE-fit**	B,C,D
			7,5x18	22	ATS Evolution	25	30	10	3016,-	**OE-fit**	B,C,D
			7,5x18	23	ATS Evolution G.Grey	25	30	10	3116,-	**OE-fit**	B,C,D
			7,5x18	230	Breyton BR-I Slv	25	30	10	2348,-	**OE-fit**	B,C,D
			7,5x18	231	Breyton BR-I M.Blk	25	30	10	2348,-	**OE-fit**	B,C,D
			8x18	2	Nitro Sapphire FF	30	30	0	4036,-	**OE-fit**	B,D
			8x18	10	Nitro Demon H.Slv	30	30	0	2972,-	**OE-fit**	B,D
			8x18	16	Advanti Inizio DST	30	30	0	3828,-	**OE-fit**	B,D
			8x18	17	BM Drive M.Gun	30	30	0	2296,-	**OE-fit**	B,D
			8x18	22	ATS Evolution	30	30	0	3016,-	**OE-fit**	B,C,D
			8x18	23	ATS Evolution G.Grey	30	30	0	3116,-	**OE-fit**	B,C,D
			8x18	26	CSP 18 G.Blk/pol	30	30	0	2956,-	**OE-fit**	B,C,D
			8x18	27	CSP 18	30	30	0	2972,-	**OE-fit**	B,C,D
			8x18	28	CSP 18 G.Blk	30	30	0	2972,-	**OE-fit**	B,C,D
			8x18	46	Image Stella	30	30	0	2276,-	**OE-fit**	B,D
			8x18	47	Image Stella M.Blk	30	30	0	2276,-	**OE-fit**	B,D
			8x18	50	Image Legend	30	30	0	2276,-	**OE-fit**	B,D
			8,5x18	2	Nitro Sapphire FF	27	30	6	4036,-		D
			9x18	16	Advanti Inizio DST	40	40	0	3828,-	**OE-fit**, kun bak	B,D
			7,5x19	230	Breyton BR-I Slv	32	30	-4	2896,-	**OE-fit**	B,C,D
			7,5x19	231	Breyton BR-I M.Blk	32	30	-4	2896,-	**OE-fit**	B,C,D
			8x19	2	Nitro Sapphire FF	30	30	0	4684,-	**OE-fit**	B,D
			8x19	3	Nitro Turismo FF	30	30	0	4492,-	**OE-fit**	B,C,D
			8x19	4	Nitro Turismo FF G.Gun/Pol	30	30	0	4644,-	**OE-fit**	B,C,D
			8x19	10	Nitro Demon H.Slv	30	30	0	3624,-	**OE-fit**	B,D
			8x19	16	Advanti Inizio DST	30	30	0	4412,-	**OE-fit**	B,D
			8x19	22	ATS Evolution	30	30	0	3892,-	**OE-fit**	B,C,D
			8x19	23	ATS Evolution G.Grey	30	30	0	4008,-	**OE-fit**	B,C,D
			8x19	26	CSP 18 G.Blk/pol	30	30	0	3596,-	**OE-fit**	B,C,D
			8x19	27	CSP 18	30	30	0	3444,-	**OE-fit**	B,C,D
			8x19	28	CSP 18 G.Blk	30	30	0	3444,-	**OE-fit**	B,C,D
			8x19	230	Breyton BR-I Slv	30	30	0	2896,-	**OE-fit**	B,C,D
			8x19	231	Breyton BR-I M.Blk	30	30	0	2896,-	**OE-fit**	B,C,D
			8,5x19	2	Nitro Sapphire FF	27	30	6	4684,-		D
			8,5x19	5	Nitro Volcano G.Gun	26	30	8	4388,-	**OE-fit**	B,C,D
			8,5x19	6	Nitro Volcano	26	30	8	4632,-	**OE-fit**	B,C,D
			8,5x19	230	Breyton BR-I Slv	25	30	10	2896,-	**OE-fit**	B,C,D
			8,5x19	231	Breyton BR-I M.Blk	25	30	10	2896,-	**OE-fit**	B,C,D
			9x19	26	CSP 18 G.Blk/pol	44	40	-8	3596,-	**OE-fit**, kun bak	B,C,D
			9x19	27	CSP 18	44	40	-8	3444,-	**OE-fit**, kun bak	B,C,D
			9x19	28	CSP 18 G.Blk	44	40	-8	3444,-	**OE-fit**, kun bak	B,C,D
			9x19	230	Breyton BR-I Slv	38	40	4	2896,-	**OE-fit**, kun bak	B,C,D
			9x19	231	Breyton BR-I M.Blk	38	40	4	2896,-	**OE-fit**, kun bak	B,C,D
			9,5x19	3	Nitro Turismo FF	40	40	0	4660,-	**OE-fit**, kun bak	B,C,D
			9,5x19	4	Nitro Turismo FF G.Gun/Pol	40	40	0	4812,-	**OE-fit**, kun bak	B,C,D
			9,5x19	5	Nitro Volcano G.Gun	36	40	8	4388,-	**OE-fit**, kun bak	B,C,D,M
			9,5x19	6	Nitro Volcano	36	40	8	4632,-	**OE-fit**, kun bak	B,C,D,M
			9,5x19	16	Advanti Inizio DST	40	40	0	4412,-	**OE-fit**, kun bak	B,D
			8x20	230	Breyton BR-I Slv	30	30	0	3224,-	**OE-fit**	B,C,D
			8x20	231	Breyton BR-I M.Blk	30	30	0	3224,-	**OE-fit**	B,C,D
			8,5x20	1	Nitro Throne FF	30	30	0	5060,-	**OE-fit**	B,D
			8,5x20	2	Nitro Sapphire FF	30	30	0	5216,-	**OE-fit**	B,D
			8,5x20	11	Nitro Demon	25	30	10	3808,-		D
			9x20	3	Nitro Turismo FF	30	30	0	4960,-	**OE-fit**	B,C,D,M
			9x20	4	Nitro Turismo FF G.Gun/Pol	30	30	0	5048,-	**OE-fit**	B,C,D,M
			9x20	5	Nitro Volcano G.Gun	26	30	8	4824,-	**OE-fit**	B,D,M
			9x20	6	Nitro Volcano	26	30	8	5164,-	**OE-fit**	B,D,M
			9x20	10	Nitro Demon H.Slv	30	30	0	4104,-		D,M
			9x20	11	Nitro Demon	30	30	0	3808,-		D,M
			9x20	230	Breyton BR-I Slv	44	40	-8	3224,-	**OE-fit**, kun bak	B,C,D
			9x20	231	Breyton BR-I M.Blk	44	40	-8	3224,-	**OE-fit**, kun bak	B,C,D
			9,5x20	10	Nitro Demon H.Slv	45	40	-10	4104,-	Kun bak	D,M
			9,5x20	11	Nitro Demon	45	40	-10	3808,-	Kun bak	D,M
			9,5x20	230	Breyton BR-I Slv	43	40	-6	3224,-	**OE-fit**, kun bak	B,C,D
			9,5x20	231	Breyton BR-I M.Blk	43	40	-6	3224,-	**OE-fit**, kun bak	B,C,D
			10x20	1	Nitro Throne FF	40	40	0	5308,-	**OE-fit**, kun bak	B,D,M
			10,5x20	3	Nitro Turismo FF	40	40	0	5116,-	**OE-fit**, kun bak	B,C,D,M
			10,5x20	4	Nitro Turismo FF G.Gun/Pol	40	40	0	5288,-	**OE-fit**, kun bak	B,C,D,M
			9x21	5	Nitro Volcano G.Gun	26	30	8	5540,-	**OE-fit**	B,C,D
			9x21	6	Nitro Volcano	26	30	8	5996,-	**OE-fit**	B,C,D
			10,5x21	5	Nitro Volcano G.Gun	42	40	-4	5540,-	**OE-fit**, kun bak	B,C,D,M
			10,5x21	6	Nitro Volcano	42	40	-4	5996,-	**OE-fit**, kun bak	B,C,D,M

Bilmerke - Bilmodell	Årsmodell	Dimensjon	Felgdim.	Bilde	Felgmodell	ET Felg	ET Bil	Avvik ET	Veil. Pris eks. MVA	Merknader	B,C D, M
BMW				PCD: **5-120** Bolt - Mutter: **12x1,50B** CB: **72,5**							
Z4 (E89)	04.09-06.16	17-20	7,5x17	46	Image Stella	32	29	-6	1812,-	**OE-fit**	B,D
			7,5x17	47	Image Stella M.Blk	32	29	-6	1812,-	**OE-fit**	B,D
			7,5x17	50	Image Legend	32	29	-6	1812,-	**OE-fit**	B,D
			8x17	22	ATS Evolution	30	29	-2	2268,-	**OE-fit**	B,C,D
			8x17	23	ATS Evolution G.Grey	30	29	-2	2340,-	**OE-fit**	B,C,D
			8x17	26	CSP 18 G.Blk/pol	30	29	-2	2272,-	**OE-fit**	B,C,D
			8x17	27	CSP 18	30	29	-2	2200,-	**OE-fit**	B,C,D
			8x17	28	CSP 18 G.Blk	30	29	-2	2200,-	**OE-fit**	B,C,D
			8x18	11	Nitro Demon	30	29	-2	2784,-		D
			8x18	22	ATS Evolution	30	29	-2	3016,-	**OE-fit**	B,C,D
			8x18	23	ATS Evolution G.Grey	30	29	-2	3116,-	**OE-fit**	B,C,D
			8x18	26	CSP 18 G.Blk/pol	30	29	-2	2956,-	**OE-fit**	B,C,D
			8x18	27	CSP 18	30	29	-2	2972,-	**OE-fit**	B,C,D
			8x18	28	CSP 18 G.Blk	30	29	-2	2972,-	**OE-fit**	B,C,D
			8x18	46	Image Stella	30	29	-2	2276,-	**OE-fit**	B,D
			8x18	47	Image Stella M.Blk	30	29	-2	2276,-		D
			8x18	50	Image Legend	34	29	-10	2276,-	**OE-fit**	B,D
			8x19	11	Nitro Demon	30	29	-2	3376,-		D
			8x19	26	CSP 18 G.Blk/pol	30	29	-2	3596,-	**OE-fit**	B,C,D
			8x19	27	CSP 18	30	29	-2	3444,-	**OE-fit**	B,C,D
			8x19	28	CSP 18 G.Blk	30	29	-2	3444,-	**OE-fit**	B,C,D
			8,5x19	5	Nitro Volcano G.Gun	30	29	-2	4388,-	**OE-fit**	B,C,D
			8,5x19	6	Nitro Volcano	30	29	-2	4632,-	**OE-fit**	B,C,D
			9x19	26	CSP 18 G.Blk/pol	40	40	0	3596,-	**OE-fit**, kun bak	B,C,D
			9x19	27	CSP 18	40	40	0	3444,-	**OE-fit**, kun bak	B,C,D
			9x19	28	CSP 18 G.Blk	40	40	0	3444,-	**OE-fit**, kun bak	B,C,D
			9,5x19	5	Nitro Volcano G.Gun	40	40	0	4388,-	**OE-fit**, kun bak	B,C,D
			9,5x19	6	Nitro Volcano	40	40	0	4632,-	**OE-fit**, kun bak	B,C,D
			8,5x20	5	Nitro Volcano G.Gun	30	29	-2	4824,-	**OE-fit**	B,C,D
			8,5x20	6	Nitro Volcano	30	29	-2	5164,-	**OE-fit**	B,C,D
			8,5x20	11	Nitro Demon	30	29	-2	3808,-		D
			9,5x20	5	Nitro Volcano G.Gun	45	40	-10	4824,-	**OE-fit**, kun bak	B,C,D
			9,5x20	6	Nitro Volcano	45	40	-10	5164,-	Kun bak	D
BMW				PCD: **5-112** Bolt - Mutter: **14x1,25B** CB: **66,5**							
Z4 (G29) cab	01.19-	17-20	7,5x17	23	ATS Evolution G.Grey	27	32	10	2340,-	**OE-fit**	B,C,D
M40i 18"			7,5x17	26	CSP 18 G.Blk/pol	27	32	10	2272,-	**OE-fit**	B,C,D
			7,5x17	27	CSP 18	27	32	10	2200,-	**OE-fit**	B,C,D
			7,5x17	28	CSP 18 G.Blk	27	32	10	2200,-	**OE-fit**	B,C,D
			7,5x17	46	Image Stella	27	32	10	1812,-	**OE-fit**	B,D
			7,5x17	47	Image Stella M.Blk	27	32	10	1812,-	**OE-fit**	B,D
			7,5x17	50	Image Legend	27	32	10	1812,-	**OE-fit**	B,D
			8x17	17	BM Drive M.Gun	25	32	14	1736,-		D
			8x18	2	Nitro Sapphire FF	30	32	4	4036,-	**OE-fit**	B,D
			8x18	11	Nitro Demon	25	32	14	2784,-		D
			8x18	16	Advanti Inizio DST	30	32	4	3828,-	**OE-fit**	B,D
			8x18	17	BM Drive M.Gun	25	32	14	2296,-		D
			8x18	22	ATS Evolution	30	32	4	3016,-	**OE-fit**	B,C,D
			8x18	23	ATS Evolution G.Grey	30	32	4	3116,-	**OE-fit**	B,C,D
			8x18	26	CSP 18 G.Blk/pol	30	32	4	2956,-	**OE-fit**	B,C,D
			8x18	27	CSP 18	30	32	4	2972,-	**OE-fit**	B,C,D
			8x18	28	CSP 18 G.Blk	30	32	4	2972,-	**OE-fit**	B,C,D
			8x18	46	Image Stella	30	32	4	2276,-	**OE-fit**	B,D
			8x18	47	Image Stella M.Blk	30	32	4	2276,-	**OE-fit**	B,D
			8x18	50	Image Legend	30	32	4	2276,-	**OE-fit**	B,D
			8,5x18	2	Nitro Sapphire FF	27	32	10	4036,-		D
			9x18	16	Advanti Inizio DST	40	40	0	3828,-	**OE-fit**, kun bak	B,D
			8x19	2	Nitro Sapphire FF	30	32	4	4684,-	**OE-fit**	B,D
			8x19	3	Nitro Turismo FF	30	32	4	4492,-	**OE-fit**	B,C,D
			8x19	4	Nitro Turismo FF G.Gun/Pol	30	32	4	4644,-	**OE-fit**	B,C,D
			8x19	11	Nitro Demon	25	32	14	3376,-		D
			8x19	16	Advanti Inizio DST	30	32	4	4412,-	**OE-fit**	B,D
			8x19	22	ATS Evolution	30	32	4	3892,-	**OE-fit**	B,C,D
			8x19	23	ATS Evolution G.Grey	30	32	4	4008,-	**OE-fit**	B,C,D
			8x19	26	CSP 18 G.Blk/pol	30	32	4	3596,-	**OE-fit**	B,C,D
			8x19	27	CSP 18	30	32	4	3444,-	**OE-fit**	B,C,D
			8x19	28	CSP 18 G.Blk	30	32	4	3444,-	**OE-fit**	B,C,D
			8x19	230	Breyton BR-I Slv	30	32	4	2896,-	**OE-fit**	B,C,D
			8x19	231	Breyton BR-I M.Blk	30	32	4	2896,-	**OE-fit**	B,C,D
			8,5x19	2	Nitro Sapphire FF	27	32	10	4684,-		D
			8,5x19	5	Nitro Volcano G.Gun	26	32	12	4388,-	**OE-fit**	B,C,D
			8,5x19	6	Nitro Volcano	26	32	12	4632,-	**OE-fit**	B,C,D
			9x19	10	Nitro Demon H.Slv	28	32	8	3624,-		D
			9x19	11	Nitro Demon	28	32	8	3376,-		D
			9x19	12	Nitro Edge M.Blk	25	32	14	3884,-		D
			9x19	26	CSP 18 G.Blk/pol	38	40	4	3596,-	**OE-fit**, kun bak	B,C,D
			9x19	27	CSP 18	38	40	4	3444,-	**OE-fit**, kun bak	B,C,D
			9x19	28	CSP 18 G.Blk	38	40	4	3444,-	**OE-fit**, kun bak	B,C,D
			9x19	230	Breyton BR-I Slv	38	40	4	2896,-	**OE-fit**, kun bak	B,C,D
			9x19	231	Breyton BR-I M.Blk	38	40	4	2896,-	**OE-fit**, kun bak	B,C,D
			9,5x19	3	Nitro Turismo FF	40	40	0	4660,-	**OE-fit**, kun bak	B,C,D
			9,5x19	4	Nitro Turismo FF G.Gun/Pol	40	40	0	4812,-	**OE-fit**, kun bak	B,C,D
			9,5x19	5	Nitro Volcano G.Gun	40	40	0	4388,-	**OE-fit**, kun bak	B,C,D
			9,5x19	6	Nitro Volcano	40	40	0	4632,-	**OE-fit**, kun bak	B,C,D
			9,5x19	16	Advanti Inizio DST	40	40	0	4412,-	**OE-fit**, kun bak	B,D,M
			8x20	230	Breyton BR-I Slv	30	32	4	3224,-	**OE-fit**	B,C,D
			8x20	231	Breyton BR-I M.Blk	30	32	4	3224,-	**OE-fit**	B,C,D

Forts. neste side »

Bilmerke - Bilmodell	Årsmodell	Dimensjon	Felgdim.	Bilde	Felgmodell	ET Felg	ET Bil	Avvik ET	Veil. Pris eks. MVA	Merknader	B,C D, M
BMW (forts.)			PCD: **5-112** Bolt - Mutter: **14x1,25B**		CB: **66,5**						
			8,5x20	1	Nitro Throne FF	30	32	4	5060,-	**OE-fit**	B,D
			8,5x20	2	Nitro Sapphire FF	30	32	4	5216,-	**OE-fit**	B,D
			8,5x20	11	Nitro Demon	25	32	14	3808,-		D
			9x20	3	Nitro Turismo FF	30	32	4	4960,-	**OE-fit**	B,C,D
			9x20	4	Nitro Turismo FF G.Gun/Pol	30	32	4	5048,-	**OE-fit**	B,C,D
			9x20	5	Nitro Volcano G.Gun	26	32	12	4824,-	**OE-fit**	B,C,D
			9x20	6	Nitro Volcano	26	32	12	5164,-	**OE-fit**	B,C,D
			9x20	10	Nitro Demon H.Slv	30	32	4	4104,-		D
			9x20	11	Nitro Demon	30	32	4	3808,-		D
			9x20	12	Nitro Edge M.Blk	25	32	14	4220,-		D
			9x20	230	Breyton BR-I Slv	44	40	-8	3224,-	**OE-fit**, kun bak	B,C,D
			9x20	231	Breyton BR-I M.Blk	44	40	-8	3224,-	**OE-fit**, kun bak	B,C,D
			9,5x20	230	Breyton BR-I Slv	43	40	-6	3224,-	**OE-fit**, kun bak	B,C,D
			9,5x20	231	Breyton BR-I M.Blk	43	40	-6	3224,-	**OE-fit**, kun bak	B,C,D
			10x20	1	Nitro Throne FF	40	40	0	5308,-	**OE-fit**, kun bak	B,D
			10,5x20	3	Nitro Turismo FF	40	40	0	5116,-	**OE-fit**, kun bak	B,C,D
			10,5x20	4	Nitro Turismo FF G.Gun/Pol	40	40	0	5288,-	**OE-fit**, kun bak	B,C,D
			10,5x20	5	Nitro Volcano G.Gun	36	40	8	4824,-	**OE-fit**, kun bak	B,C,D
			10,5x20	6	Nitro Volcano	36	40	8	5164,-	**OE-fit**, kun bak	B,C,D
BMW			PCD: **5-120** Bolt - Mutter: **12x1,50B**		CB: **72,5**						
M3 (E90) sedan	03.08-07.13	18-20	9x20	5	Nitro Volcano G.Gun	32	29	-6	4824,-	**OE-fit**	B,C,D
M3 (E92) coupe	08.07-07.13	18-20	9x20	6	Nitro Volcano	32	29	-6	5164,-	**OE-fit**	B,C,D
M3 (E93) cab	04.08-09.13	18-20	10,5x20	5	Nitro Volcano G.Gun	42	29	-26	4824,-	Spacer bak 20 mm	C,D
			10,5x20	6	Nitro Volcano	42	29	-26	5164,-	Spacer bak 20 mm	C,D
BMW			PCD: **5-120** Bolt - Mutter: **14x1,25B**		CB: **72,5**						
M3 (F80) sedan	04.14-	18-21	9x19	3	Nitro Turismo FF	25	32	14	4660,-	**OE-fit**	B,C,D
(Keramiska bremser spør oss!)			9x19	4	Nitro Turismo FF G.Gun/Pol	25	32	14	4812,-	**OE-fit**	B,C,D
M4 (F82) coupe	04.14-	18-21	10x19	3	Nitro Turismo FF	40	40	0	4812,-	**OE-fit**, kun bak	B,C,D
(Keramiska bremser spør oss!)			10x19	4	Nitro Turismo FF G.Gun/Pol	40	40	0	4964,-	**OE-fit**, kun bak	B,C,D
			9x20	5	Nitro Volcano G.Gun	32	32	0	4824,-	**OE-fit**	B,C,D
			9x20	6	Nitro Volcano	32	32	0	5164,-	**OE-fit**	B,C,D
			10,5x20	5	Nitro Volcano G.Gun	42	40	-4	4824,-	**OE-fit**, kun bak	B,C,D
			10,5x20	6	Nitro Volcano	42	40	-4	5164,-	**OE-fit**, kun bak	B,C,D
			9x21	5	Nitro Volcano G.Gun	32	32	0	5540,-	**OE-fit**	B,C,D
			9x21	6	Nitro Volcano	32	32	0	5996,-	**OE-fit**	B,C,D
			10,5x21	5	Nitro Volcano G.Gun	42	40	-4	5540,-	**OE-fit**, kun bak	B,C,D
			10,5x21	6	Nitro Volcano	42	40	-4	5996,-	**OE-fit**, kun bak	B,C,D
BMW			PCD: **4-100** Bolt - Mutter: **12x1,50B**		CB: **57,1**						
3-Series (E30)	10.82-11.90	14-18	5,5x14	37	Image Comet	30	35	10	1264,-		D
			5,5x14	38	Image Comet Slv	30	35	10	1264,-		D
			5,5x14	45	Image Ride HL	30	35	10	1716,-		D
			6x15	45	Image Ride HL	30	35	10	2032,-		D
BMW			PCD: **5-120** Bolt - Mutter: **12x1,50B**		CB: **72,5**						
5-Series (E60) sedan xDrive	08.05-03.10	17-21	7,5x17	22	ATS Evolution	43	43	0	2268,-	**OE-fit**	B,C,D
5-Series (E61) touring xDrive	08.05-08.10	17-21	7,5x17	23	ATS Evolution G.Grey	43	43	0	2340,-	**OE-fit**	B,C,D
			7,5x17	26	CSP 18 G.Blk/pol	37	43	12	2272,-	**OE-fit**	B,C,D
			7,5x17	27	CSP 18	37	43	12	2200,-	**OE-fit**	B,C,D
			7,5x17	28	CSP 18 G.Blk	37	43	12	2200,-	**OE-fit**	B,C,D
			8x18	11	Nitro Demon	40	43	6	2784,-		D
			8x19	4	Nitro Turismo FF G.Gun/Pol	40	43	6	4644,-	**OE-fit**	B,C,D
			8x19	11	Nitro Demon	40	43	6	3376,-		D
			8,5x20	11	Nitro Demon	40	43	6	3808,-		D
BMW			PCD: **5-120** Bolt - Mutter: **14x1,25B**		CB: **72,5**						
5-Series (F10) sedan	03.10-12.16	17-21	8x17	22	ATS Evolution	30	30	0	2268,-	**OE-fit**	B,C,D
550i 18"			8x17	23	ATS Evolution G.Grey	30	30	0	2340,-	**OE-fit**	B,C,D
M 550d xDrive 19"			8x17	26	CSP 18 G.Blk/pol	30	30	0	2272,-	**OE-fit**	B,C,D
5-Series (F11) touring	09.10-04.17	17-21	8x17	27	CSP 18	30	30	0	2200,-	**OE-fit**	B,C,D
550i 18"			8x17	28	CSP 18 G.Blk	30	30	0	2200,-	**OE-fit**	B,C,D
M 550d xDrive 19"			8x18	11	Nitro Demon	30	30	0	2784,-		D
			8x18	22	ATS Evolution	30	30	0	3016,-	**OE-fit**	B,C,D
			8x18	23	ATS Evolution G.Grey	30	30	0	3116,-	**OE-fit**	B,C,D
			8x18	26	CSP 18 G.Blk/pol	30	30	0	2956,-	**OE-fit**	B,C,D
			8x18	27	CSP 18	30	30	0	2972,-	**OE-fit**	B,C,D
			8x18	28	CSP 18 G.Blk	30	30	0	2972,-	**OE-fit**	B,C,D
			8x18	46	Image Stella	30	30	0	2276,-	**OE-fit**	B,D
			8x18	47	Image Stella M.Blk	30	30	0	2276,-	**OE-fit**	B,D
			8x19	11	Nitro Demon	30	30	0	3376,-		D
			8x19	26	CSP 18 G.Blk/pol	30	30	0	3596,-	**OE-fit**	B,C,D
			8x19	27	CSP 18	30	30	0	3444,-	**OE-fit**	B,C,D
			8x19	28	CSP 18 G.Blk	30	30	0	3444,-	**OE-fit**	B,C,D
			8,5x19	5	Nitro Volcano G.Gun	30	30	0	4388,-	**OE-fit**	B,C,D
			8,5x19	6	Nitro Volcano	30	30	0	4632,-	**OE-fit**	B,C,D
			9x19	3	Nitro Turismo FF	25	30	10	4660,-	**OE-fit**	B,C,D,M
			9x19	4	Nitro Turismo FF G.Gun/Pol	25	30	10	4812,-	**OE-fit**	B,C,D,M
			9x19	26	CSP 18 G.Blk/pol	40	40	0	3596,-	**OE-fit**, kun bak	B,C,D
			9x19	27	CSP 18	40	40	0	3444,-	**OE-fit**, kun bak	B,C,D
			9x19	28	CSP 18 G.Blk	40	40	0	3444,-	**OE-fit**, kun bak	B,C,D
			9,5x19	5	Nitro Volcano G.Gun	40	40	0	4388,-	**OE-fit**, kun bak	B,C,D
			9,5x19	6	Nitro Volcano	40	40	0	4632,-	**OE-fit**, kun bak	B,C,D
			10x19	3	Nitro Turismo FF	40	40	0	4812,-	**OE-fit**, kun bak	B,C,D
			10x19	4	Nitro Turismo FF G.Gun/Pol	40	40	0	4964,-	**OE-fit**, kun bak	B,C,D
			8,5x20	5	Nitro Volcano G.Gun	30	30	0	4824,-	**OE-fit**	B,C,D
			8,5x20	6	Nitro Volcano	30	30	0	5164,-	**OE-fit**	B,C,D
			8,5x20	11	Nitro Demon	30	30	0	3808,-		D
			9x20	5	Nitro Volcano G.Gun	32	30	-4	4824,-	**OE-fit**	B,C,D

Forts. neste side »

Bilmerke - Bilmodell	Årsmodell	Dimensjon	Felgdim.	Bilde	Felgmodell	ET Felg	ET Bil	Avvik ET	Veil. Pris eks. MVA	Merknader	B,C D, M
BMW (forts.)				PCD: **5-120** Bolt - Mutter: **14x1,25B**	CB: **72,5**						
			9x20	6	Nitro Volcano	32	30	-4	5164,-	**OE-fit**	B,C,D
			9x20	15	Nitro Magnum	30	30	0	4572,-		D
			10,5x20	5	Nitro Volcano G.Gun	42	40	-4	4824,-	**OE-fit**, kun bak	B,C,D
			10,5x20	6	Nitro Volcano	42	40	-4	5164,-	**OE-fit**, kun bak	B,C,D
			9x21	5	Nitro Volcano G.Gun	32	30	-4	5540,-	**OE-fit**	B,C,D
			9x21	6	Nitro Volcano	32	30	-4	5996,-	**OE-fit**	B,C,D
			9,5x21	5	Nitro Volcano G.Gun	45	40	-10	5540,-	**OE-fit**, kun bak	B,C,D
			9,5x21	6	Nitro Volcano	45	40	-10	5996,-	**OE-fit**, kun bak	B,C,D
			10,5x21	5	Nitro Volcano G.Gun	42	40	-4	5540,-	**OE-fit**, kun bak	B,C,D
			10,5x21	6	Nitro Volcano	42	40	-4	5996,-	**OE-fit**, kun bak	B,C,D
BMW				PCD: **5-112** Bolt - Mutter: **14x1,25B**	CB: **66,5**						
5-Series (G30) sedan	01.17-	17-22	7,5x17	22	ATS Evolution	27	27	0	2268,-	**OE-fit**	B,C,D
M550i 19"			7,5x17	23	ATS Evolution G.Grey	27	27	0	2340,-	**OE-fit**	B,C,D
(M-sport bremser 19")			7,5x17	26	CSP 18 G.Blk/pol	27	27	0	2272,-	**OE-fit**	B,C,D
5-Series (G31) touring	05.17-	17-21	7,5x17	27	CSP 18	27	27	0	2200,-	**OE-fit**	B,C,D
M550i 19"			7,5x17	28	CSP 18 G.Blk	27	27	0	2200,-	**OE-fit**	B,C,D
(M-sport bremser 19")			7,5x17	46	Image Stella	27	27	0	1812,-	**OE-fit**	B,D
			7,5x17	47	Image Stella M.Blk	27	27	0	1812,-	**OE-fit**	B,D
			7,5x17	50	Image Legend	27	27	0	1812,-	**OE-fit**	B,D
			8x18	2	Nitro Sapphire FF	30	27	-6	4036,-	**OE-fit**	B,D
			8x18	10	Nitro Demon H.Slv	30	27	-6	2972,-	**OE-fit**	B,D
			8x18	16	Advanti Inizio DST	30	27	-6	3828,-	**OE-fit**	B,D
			8x18	17	BM Drive M.Gun	30	27	-6	2296,-	**OE-fit**	B,D
			8x18	22	ATS Evolution	30	27	-6	3016,-	**OE-fit**	B,C,D
			8x18	23	ATS Evolution G.Grey	30	27	-6	3116,-	**OE-fit**	B,C,D
			8x18	26	CSP 18 G.Blk/pol	30	27	-6	2956,-	**OE-fit**	B,C,D
			8x18	27	CSP 18	30	27	-6	2972,-	**OE-fit**	B,C,D
			8x18	28	CSP 18 G.Blk	30	27	-6	2972,-	**OE-fit**	B,C,D
			8x18	46	Image Stella	30	27	-6	2276,-	**OE-fit**	B,D
			8x18	47	Image Stella M.Blk	30	27	-6	2276,-	**OE-fit**	B,D
			8x18	50	Image Legend	30	27	-6	2276,-	**OE-fit**	B,D
			8,5x18	2	Nitro Sapphire FF	27	27	0	4036,-		D
			9x18	16	Advanti Inizio DST	40	44	8	3828,-	**OE-fit**, kun bak	B,D
			8x19	2	Nitro Sapphire FF	30	27	-6	4684,-	**OE-fit**	B,D
			8x19	3	Nitro Turismo FF	30	27	-6	4492,-	**OE-fit**	B,C,D
			8x19	4	Nitro Turismo FF G.Gun/Pol	30	27	-6	4644,-	**OE-fit**	B,C,D
			8x19	10	Nitro Demon H.Slv	30	27	-6	3624,-	**OE-fit**	B,D
			8x19	16	Advanti Inizio DST	30	27	-6	4412,-	**OE-fit**	B,D
			8x19	22	ATS Evolution	30	27	-6	3892,-	**OE-fit**	B,C,D
			8x19	23	ATS Evolution G.Grey	30	27	-6	4008,-	**OE-fit**	B,C,D
			8x19	26	CSP 18 G.Blk/pol	30	27	-6	3596,-	**OE-fit**	B,C,D
			8x19	27	CSP 18	30	27	-6	3444,-	**OE-fit**	B,C,D
			8x19	28	CSP 18 G.Blk	30	27	-6	3444,-	**OE-fit**	B,C,D
			8x19	230	Breyton BR-I Slv	30	27	-6	2896,-	**OE-fit**	B,C,D
			8x19	231	Breyton BR-I M.Blk	30	27	-6	2896,-	**OE-fit**	B,C,D
			8,5x19	2	Nitro Sapphire FF	27	27	0	4684,-		D
			8,5x19	5	Nitro Volcano G.Gun	26	27	2	4388,-	**OE-fit**	B,C,D
			8,5x19	6	Nitro Volcano	26	27	2	4632,-	**OE-fit**	B,C,D
			8,5x19	230	Breyton BR-I Slv	25	27	4	2896,-	**OE-fit**	B,C,D
			8,5x19	231	Breyton BR-I M.Blk	25	27	4	2896,-	**OE-fit**	B,C,D
			9x19	26	CSP 18 G.Blk/pol	44	44	0	3596,-	**OE-fit**, kun bak	B,C,D
			9x19	27	CSP 18	44	44	0	3444,-	**OE-fit**, kun bak	B,C,D
			9x19	28	CSP 18 G.Blk	44	44	0	3444,-	**OE-fit**, kun bak	B,C,D
			9x19	230	Breyton BR-I Slv	38	44	12	2896,-	**OE-fit**, kun bak	B,C,D
			9x19	231	Breyton BR-I M.Blk	38	44	12	2896,-	**OE-fit**, kun bak	B,C,D
			9,5x19	3	Nitro Turismo FF	40	44	8	4660,-	**OE-fit**, kun bak	B,C,D
			9,5x19	4	Nitro Turismo FF G.Gun/Pol	40	44	8	4812,-	**OE-fit**, kun bak	B,C,D
			9,5x19	5	Nitro Volcano G.Gun	36	44	16	4388,-	**OE-fit**, kun bak	B,C,D
			9,5x19	6	Nitro Volcano	36	44	16	4632,-	**OE-fit**, kun bak	B,C,D
			9,5x19	16	Advanti Inizio DST	40	44	8	4412,-	**OE-fit**, kun bak	B,D
			8x20	230	Breyton BR-I Slv	30	27	-6	3224,-	**OE-fit**	B,C,D
			8x20	231	Breyton BR-I M.Blk	30	27	-6	3224,-	**OE-fit**	B,C,D
			8,5x20	1	Nitro Throne FF	30	27	-6	5060,-	**OE-fit**	B,D
			8,5x20	2	Nitro Sapphire FF	30	27	-6	5216,-	**OE-fit**	B,D
			8,5x20	11	Nitro Demon	25	27	4	3808,-		D
			9x20	3	Nitro Turismo FF	30	27	-6	4960,-	**OE-fit**	B,C,D
			9x20	4	Nitro Turismo FF G.Gun/Pol	30	27	-6	5048,-	**OE-fit**	B,C,D
			9x20	5	Nitro Volcano G.Gun	26	27	2	4824,-	**OE-fit**	B,C,D
			9x20	6	Nitro Volcano	26	27	2	5164,-	**OE-fit**	B,C,D
			9x20	15	Nitro Magnum	28	27	-2	4572,-	**OE-fit**	B,D
			9x20	230	Breyton BR-I Slv	44	44	0	3224,-	**OE-fit**, kun bak	B,C,D
			9x20	231	Breyton BR-I M.Blk	44	44	0	3224,-	**OE-fit**, kun bak	B,C,D
			9,5x20	11	Nitro Demon	45	44	-2	3808,-	Kun bak	D
			9,5x20	230	Breyton BR-I Slv	43	44	2	3224,-	**OE-fit**, kun bak	B,C,D
			9,5x20	231	Breyton BR-I M.Blk	43	44	2	3224,-	**OE-fit**, kun bak	B,C,D
			10x20	1	Nitro Throne FF	40	44	8	5308,-	**OE-fit**, kun bak	B,D
			10,5x20	1	Nitro Throne FF	40	44	8	5308,-	Kun bak	D,M
			10,5x20	3	Nitro Turismo FF	40	44	8	5116,-	**OE-fit**, kun bak	B,C,D,M
			10,5x20	4	Nitro Turismo FF G.Gun/Pol	40	44	8	5288,-	**OE-fit**, kun bak	B,C,D,M
			10,5x20	5	Nitro Volcano G.Gun	36	44	16	4824,-	**OE-fit**, kun bak	B,C,D,M
			10,5x20	6	Nitro Volcano	36	44	16	5164,-	**OE-fit**, kun bak	B,C,D,M
			9x21	5	Nitro Volcano G.Gun	26	27	2	5540,-	**OE-fit**	B,C,D
			9x21	6	Nitro Volcano	26	27	2	5996,-	**OE-fit**	B,C,D
			10,5x21	5	Nitro Volcano G.Gun	36	44	16	5540,-	**OE-fit**, kun bak	B,C,D,M
			10,5x21	6	Nitro Volcano	36	44	16	5996,-	**OE-fit**, kun bak	B,C,D,M
			9x22	15	Nitro Magnum	28	27	-2	5420,-		D,M
			10,5x22	15	Nitro Magnum	36	44	16	5420,-	Kun bak	D,M

Bilmerke - Bilmodell	Årsmodell	Dimensjon	Felgdim.	Bilde	Felgmodell	ET Felg	ET Bil	Avvik ET	Veil. Pris eks. MVA	Merknader	B,C D, M
BMW			PCD: **5-120** Bolt - Mutter: **14x1,25B** CB: **72,5**								
M5 (F10) sedan	09.11-11.17	19-21	9x20	5	Nitro Volcano G.Gun	32	32	0	4824,-	**OE-fit**	B,C,D
			9x20	6	Nitro Volcano	32	32	0	5164,-	**OE-fit**	B,C,D
			10,5x20	5	Nitro Volcano G.Gun	42	34	-16	4824,-	Kun bak, spacer 15 mm	C,D
			10,5x20	6	Nitro Volcano	42	34	-16	5164,-	Kun bak, spacer 15 mm	C,D
			9x21	5	Nitro Volcano G.Gun	32	32	0	5540,-	**OE-fit**	B,C,D
			9x21	6	Nitro Volcano	32	32	0	5996,-	**OE-fit**	B,C,D
			10,5x21	5	Nitro Volcano G.Gun	42	34	-16	5540,-	Kun bak, spacer 15 mm	C,D
			10,5x21	6	Nitro Volcano	42	34	-16	5996,-	Kun bak, spacer 15 mm	C,D
BMW			PCD: **5-112** Bolt - Mutter: **14x1,25B** CB: **66,5**								
M5 (F90)	12.17-	19-21	9,5x19	3	Nitro Turismo FF	25	26	2	4660,-	**OE-fit**	B,C,D
Competition package (460kW)			9,5x19	4	Nitro Turismo FF G.Gun/Pol	25	26	2	4812,-	**OE-fit**	B,C,D
og keramiska bremser 20"			10,5x19	3	Nitro Turismo FF	25	28	6	4812,-	**OE-fit**, kun bak	B,C,D
			10,5x19	4	Nitro Turismo FF G.Gun/Pol	25	28	6	4964,-	**OE-fit**, kun bak	B,C,D
			9,5x20	3	Nitro Turismo FF	25	26	2	4960,-	**OE-fit**	B,C,D
			9,5x20	4	Nitro Turismo FF G.Gun/Pol	25	26	2	5048,-	**OE-fit**	B,C,D
			10,5x20	3	Nitro Turismo FF	25	28	6	5116,-	**OE-fit**, kun bak	B,C,D
			10,5x20	4	Nitro Turismo FF G.Gun/Pol	25	28	6	5288,-	**OE-fit**, kun bak	B,C,D
BMW			PCD: **5-112** Bolt - Mutter: **14x1,25B** CB: **66,5**								
6-Series (G32) GT	09.17-	17-22	7,5x17	22	ATS Evolution	27	27	0	2268,-	**OE-fit**	B,C,D
Biler med M-sportbremsar 18"			7,5x17	23	ATS Evolution G.Grey	27	27	0	2340,-	**OE-fit**	B,C,D
			7,5x17	26	CSP 18 G.Blk/pol	27	27	0	2272,-	**OE-fit**	B,C,D
			7,5x17	27	CSP 18	27	27	0	2200,-	**OE-fit**	B,C,D
			7,5x17	28	CSP 18 G.Blk	27	27	0	2200,-	**OE-fit**	B,C,D
			7,5x17	46	Image Stella	27	27	0	1812,-	**OE-fit**	B,D
			7,5x17	47	Image Stella M.Blk	27	27	0	1812,-	**OE-fit**	B,D
			7,5x17	50	Image Legend	27	27	0	1812,-	**OE-fit**	B,D
			8x18	2	Nitro Sapphire FF	30	27	-6	4036,-	**OE-fit**	B,D
			8x18	10	Nitro Demon H.Slv	30	27	-6	2972,-	**OE-fit**	B,D
			8x18	16	Advanti Inizio DST	30	27	-6	3828,-	**OE-fit**	B,D
			8x18	17	BM Drive M.Gun	30	27	-6	2296,-		D
			8x18	22	ATS Evolution	30	27	-6	3016,-	**OE-fit**	B,C,D
			8x18	23	ATS Evolution G.Grey	30	27	-6	3116,-	**OE-fit**	B,C,D
			8x18	26	CSP 18 G.Blk/pol	30	27	-6	2956,-	**OE-fit**	B,C,D
			8x18	27	CSP 18	30	27	-6	2972,-	**OE-fit**	B,C,D
			8x18	28	CSP 18 G.Blk	30	27	-6	2972,-	**OE-fit**	B,C,D
			8x18	46	Image Stella	30	27	-6	2276,-	**OE-fit**	B,D
			8x18	47	Image Stella M.Blk	30	27	-6	2276,-	**OE-fit**	B,D
			8x18	50	Image Legend	30	27	-6	2276,-	**OE-fit**	B,D
			8,5x18	2	Nitro Sapphire FF	27	27	0	4036,-		D
			9x18	16	Advanti Inizio DST	40	44	8	3828,-	**OE-fit**, kun bak	B,D
			8x19	2	Nitro Sapphire FF	30	27	-6	4684,-	**OE-fit**	B,D
			8x19	3	Nitro Turismo FF	30	27	-6	4492,-	**OE-fit**	B,C,D
			8x19	4	Nitro Turismo FF G.Gun/Pol	30	27	-6	4644,-	**OE-fit**	B,C,D
			8x19	10	Nitro Demon H.Slv	30	27	-6	3624,-	**OE-fit**	B,D
			8x19	16	Advanti Inizio DST	30	27	-6	4412,-	**OE-fit**	B,D
			8x19	22	ATS Evolution	30	27	-6	3892,-	**OE-fit**	B,C,D
			8x19	23	ATS Evolution G.Grey	30	27	-6	4008,-	**OE-fit**	B,C,D
			8x19	26	CSP 18 G.Blk/pol	30	27	-6	3596,-	**OE-fit**	B,C,D
			8x19	27	CSP 18	30	27	-6	3444,-	**OE-fit**	B,C,D
			8x19	28	CSP 18 G.Blk	30	27	-6	3444,-	**OE-fit**	B,C,D
			8,5x19	2	Nitro Sapphire FF	27	27	0	4684,-		D
			8,5x19	5	Nitro Volcano G.Gun	26	27	2	4388,-	**OE-fit**	B,C,D
			8,5x19	6	Nitro Volcano	26	27	2	4632,-	**OE-fit**	B,C,D
			8,5x19	230	Breyton BR-I Slv	25	27	4	2896,-	**OE-fit**	B,C,D
			8,5x19	231	Breyton BR-I M.Blk	25	27	4	2896,-	**OE-fit**	B,C,D
			9x19	26	CSP 18 G.Blk/pol	44	44	0	3596,-	**OE-fit**, kun bak	B,C,D
			9x19	27	CSP 18	44	44	0	3444,-	**OE-fit**, kun bak	B,C,D
			9x19	28	CSP 18 G.Blk	44	44	0	3444,-	**OE-fit**, kun bak	B,C,D
			9x19	230	Breyton BR-I Slv	38	44	12	2896,-	**OE-fit**, kun bak	B,C,D
			9x19	231	Breyton BR-I M.Blk	38	44	12	2896,-	Kun bak	C,D
			9,5x19	3	Nitro Turismo FF	40	44	8	4660,-	**OE-fit**, kun bak	B,C,D
			9,5x19	4	Nitro Turismo FF G.Gun/Pol	40	44	8	4812,-	**OE-fit**, kun bak	B,C,D
			9,5x19	5	Nitro Volcano G.Gun	36	44	16	4388,-	**OE-fit**, kun bak	B,C,D
			9,5x19	6	Nitro Volcano	36	44	16	4632,-	**OE-fit**, kun bak	B,C,D
			9,5x19	16	Advanti Inizio DST	40	44	8	4412,-	**OE-fit**, kun bak	B,D
			8,5x20	1	Nitro Throne FF	30	27	-6	5060,-	**OE-fit**	B,D
			8,5x20	2	Nitro Sapphire FF	30	27	-6	5216,-	**OE-fit**	B,D
			8,5x20	11	Nitro Demon	25	27	4	3808,-		D
			9x20	3	Nitro Turismo FF	30	27	-6	4960,-	**OE-fit**	B,C,D
			9x20	4	Nitro Turismo FF G.Gun/Pol	30	27	-6	5048,-	**OE-fit**	B,C,D
			9x20	5	Nitro Volcano G.Gun	26	27	2	4824,-	**OE-fit**	B,C,D
			9x20	6	Nitro Volcano	26	27	2	5164,-	**OE-fit**	B,C,D
			9x20	12	Nitro Edge M.Blk	25	27	4	4220,-		D
			9x20	230	Breyton BR-I Slv	35	27	-16	3224,-	**OE-fit**	B,C,D
			9x20	231	Breyton BR-I M.Blk	35	27	-16	3224,-	**OE-fit**	B,C,D
			9,5x20	10	Nitro Demon H.Slv	45	44	-2	4104,-	Kun bak	D
			9,5x20	11	Nitro Demon	45	44	-2	3808,-	Kun bak	D
			9,5x20	230	Breyton BR-I Slv	43	44	2	3224,-	**OE-fit**, kun bak	B,C,D
			9,5x20	231	Breyton BR-I M.Blk	43	44	2	3224,-	**OE-fit**, kun bak	B,C,D
			10x20	1	Nitro Throne FF	40	44	8	5308,-	**OE-fit**, kun bak	B,D
			10x20	12	Nitro Edge M.Blk	30	44	28	4220,-	Kun bak	D,M
			10,5x20	1	Nitro Throne FF	40	44	8	5308,-	Kun bak	D,M
			10,5x20	3	Nitro Turismo FF	40	44	8	5116,-	**OE-fit**, kun bak	B,C,D,M
			10,5x20	4	Nitro Turismo FF G.Gun/Pol	40	44	8	5288,-	**OE-fit**, kun bak	B,C,D,M
			10,5x20	5	Nitro Volcano G.Gun	36	44	16	4824,-	**OE-fit**, kun bak	B,C,D,M
			10,5x20	6	Nitro Volcano	36	44	16	5164,-	**OE-fit**, kun bak	B,C,D,M

Forts. neste side »

Bilmerke - Bilmodell	Årsmodell	Dimensjon	Felgdim.	Bilde	Felgmodell	ET Felg	ET Bil	Avvik ET	Veil. Pris eks. MVA	Merknader	B,C D, M
BMW (forts.)				PCD: **5-112** Bolt - Mutter: **14x1,25B**		CB: **66,5**					
			9x21	5	Nitro Volcano G.Gun	26	27	2	5540,-	**OE-fit**	B,C,D
			9x21	6	Nitro Volcano	26	27	2	5996,-	**OE-fit**	B,C,D
			10,5x21	5	Nitro Volcano G.Gun	36	44	16	5540,-	**OE-fit**, kun bak	B,C,D,M
			10,5x21	6	Nitro Volcano	36	44	16	5996,-	**OE-fit**, kun bak	B,C,D,M
			9x22	15	Nitro Magnum	28	27	-2	5420,-	**OE-fit**	B,D
			10x22	12	Nitro Edge M.Blk	30	44	28	4888,-	Kun bak	D,M
			10,5x22	15	Nitro Magnum	36	44	16	5420,-	**OE-fit**, kun bak	B,D,M
BMW				PCD: **5-112** Bolt - Mutter: **14x1,25B**		CB: **66,5**					
8-Series (G14) cab	12.18-	18-22	8x18	2	Nitro Sapphire FF	30	26	-8	4036,-	**OE-fit**	B,D
M850i 20"			8x18	16	Advanti Inizio DST	30	26	-8	3828,-	**OE-fit**	B,D
(Biler med M-bremser 19")			8x18	22	ATS Evolution	30	26	-8	3016,-	**OE-fit**	B,C,D
8-Series (G15) coupe	12.18-	18-22	8x18	23	ATS Evolution G.Grey	30	26	-8	3116,-	**OE-fit**	B,C,D
M850i 20"			8x18	26	CSP 18 G.Blk/pol	30	26	-8	2956,-	**OE-fit**	B,C,D
8-Series (G16) gran coupe	06.19-	18-22	8x18	27	CSP 18	30	26	-8	2972,-	**OE-fit**	B,C,D
M850i 20"			8x18	28	CSP 18 G.Blk	30	26	-8	2972,-	**OE-fit**	B,C,D
(Biler med M-bremser 19")			8x18	46	Image Stella	30	26	-8	2276,-	**OE-fit**	B,D
			8x18	47	Image Stella M.Blk	30	26	-8	2276,-	**OE-fit**	B,D
			8x18	50	Image Legend	30	26	-8	2276,-	**OE-fit**	B,D
			8,5x18	2	Nitro Sapphire FF	27	26	-2	4036,-		D
			9x18	16	Advanti Inizio DST	40	41	2	3828,-	**OE-fit**, kun bak	B,D
			8x19	2	Nitro Sapphire FF	30	26	-8	4684,-	**OE-fit**	B,D
			8x19	3	Nitro Turismo FF	30	26	-8	4492,-	**OE-fit**	B,C,D
			8x19	4	Nitro Turismo FF G.Gun/Pol	30	26	-8	4644,-	**OE-fit**	B,C,D
			8x19	16	Advanti Inizio DST	30	26	-8	4412,-	**OE-fit**	B,D
			8x19	22	ATS Evolution	30	26	-8	3892,-	**OE-fit**	B,C,D
			8x19	23	ATS Evolution G.Grey	30	26	-8	4008,-	**OE-fit**	B,C,D
			8x19	26	CSP 18 G.Blk/pol	30	26	-8	3596,-	**OE-fit**	B,C,D
			8x19	27	CSP 18	30	26	-8	3444,-	**OE-fit**	B,C,D
			8x19	28	CSP 18 G.Blk	30	26	-8	3444,-	**OE-fit**	B,C,D
			8x19	230	Breyton BR-I Slv	30	26	-8	2896,-	**OE-fit**, spacer 11 mm	B,C,D
			8x19	231	Breyton BR-I M.Blk	30	26	-8	2896,-	**OE-fit**, spacer 11 mm	B,C,D
			8,5x19	2	Nitro Sapphire FF	27	26	-2	4684,-		D
			8,5x19	5	Nitro Volcano G.Gun	26	26	0	4388,-	**OE-fit**	B,C,D
			8,5x19	6	Nitro Volcano	26	26	0	4632,-	**OE-fit**	B,C,D
			8,5x19	230	Breyton BR-I Slv	25	26	2	2896,-	**OE-fit**	B,C,D
			8,5x19	231	Breyton BR-I M.Blk	25	26	2	2896,-	**OE-fit**	B,C,D
			9x19	26	CSP 18 G.Blk/pol	38	41	6	3596,-	**OE-fit**, kun bak	B,C,D
			9x19	27	CSP 18	38	41	6	3444,-	**OE-fit**, kun bak	B,C,D
			9x19	28	CSP 18 G.Blk	38	41	6	3444,-	**OE-fit**, kun bak	B,C,D
			9x19	230	Breyton BR-I Slv	38	41	6	2896,-	**OE-fit**, kun bak, spacer 11 mm	B,C,D
			9x19	231	Breyton BR-I M.Blk	38	41	6	2896,-	**OE-fit**, kun bak, spacer 11 mm	B,C,D
			9,5x19	3	Nitro Turismo FF	40	41	2	4660,-	**OE-fit**, kun bak	B,C,D
			9,5x19	4	Nitro Turismo FF G.Gun/Pol	40	41	2	4812,-	**OE-fit**, kun bak	B,C,D
			9,5x19	5	Nitro Volcano G.Gun	36	41	10	4388,-	**OE-fit**, kun bak	B,C,D
			9,5x19	6	Nitro Volcano	36	41	10	4632,-	**OE-fit**, kun bak	B,C,D
			9,5x19	16	Advanti Inizio DST	40	41	2	4412,-	**OE-fit**, kun bak	B,D
			8x20	230	Breyton BR-I Slv	27	26	-2	3224,-	**OE-fit**	B,C,D
			8x20	231	Breyton BR-I M.Blk	27	26	-2	3224,-	**OE-fit**	B,C,D
			8,5x20	1	Nitro Throne FF	20	26	12	5060,-		D
			8,5x20	2	Nitro Sapphire FF	30	26	-8	5216,-	**OE-fit**	B,D
			9x20	3	Nitro Turismo FF	30	26	-8	4960,-	**OE-fit**	B,C,D
			9x20	4	Nitro Turismo FF G.Gun/Pol	30	26	-8	5048,-	**OE-fit**	B,C,D
			9x20	5	Nitro Volcano G.Gun	26	26	0	4824,-	**OE-fit**	B,C,D
			9x20	6	Nitro Volcano	26	26	0	5164,-	**OE-fit**	B,C,D
			9x20	230	Breyton BR-I Slv	35	41	12	3224,-	**OE-fit**, kun bak	B,C,D
			9x20	231	Breyton BR-I M.Blk	35	41	12	3224,-	**OE-fit**, kun bak	B,C,D
			9,5x20	230	Breyton BR-I Slv	43	41	-4	3224,-	**OE-fit**, kun bak	B,C,D
			9,5x20	231	Breyton BR-I M.Blk	43	41	-4	3224,-	**OE-fit**, kun bak	B,C,D
			10x20	1	Nitro Throne FF	40	41	2	5308,-	**OE-fit**, kun bak	B,D
			10,5x20	1	Nitro Throne FF	40	41	2	5308,-	Kun bak	D,M
			10,5x20	3	Nitro Turismo FF	40	41	2	5116,-	**OE-fit**, kun bak	B,C,D
			10,5x20	4	Nitro Turismo FF G.Gun/Pol	40	41	2	5288,-	**OE-fit**, kun bak	B,C,D
			10,5x20	5	Nitro Volcano G.Gun	36	41	10	4824,-	**OE-fit**, kun bak	B,C,D
			10,5x20	6	Nitro Volcano	36	41	10	5164,-	**OE-fit**, kun bak	B,C,D
BMW				PCD: **5-112** Bolt - Mutter: **14x1,25B**		CB: **66,5**					
M8 (G14) cab	07.19-	19-22	9,5x19	3	Nitro Turismo FF	25	28	6	4660,-	**OE-fit**	B,C,D
Competition 20"			9,5x19	4	Nitro Turismo FF G.Gun/Pol	25	28	6	4812,-	**OE-fit**	B,C,D
M8 (G15) coupe	07.19-	19-22	10,5x19	3	Nitro Turismo FF	25	28	6	4812,-	**OE-fit**, kun bak	B,C,D
Competition 20"			10,5x19	4	Nitro Turismo FF G.Gun/Pol	25	28	6	4964,-	**OE-fit**, kun bak	B,C,D
M8 (G16) gran coupe	11.19-	19-22	9,5x20	3	Nitro Turismo FF	25	28	6	4960,-	**OE-fit**	B,C,D
Competition 20"			9,5x20	4	Nitro Turismo FF G.Gun/Pol	25	28	6	5048,-	**OE-fit**	B,C,D
			10,5x20	3	Nitro Turismo FF	25	28	6	5116,-	**OE-fit**, kun bak	B,C,D
			10,5x20	4	Nitro Turismo FF G.Gun/Pol	25	28	6	5288,-	**OE-fit**, kun bak	B,C,D
BMW				PCD: **5-120** Bolt - Mutter: **14x1,25B**		CB: **72,5**					
6-Series (F12) cab	03.11-12.18	17-21	8x17	22	ATS Evolution	30	30	0	2268,-	**OE-fit**	B,C,D
650i 18"			8x17	23	ATS Evolution G.Grey	30	30	0	2340,-	**OE-fit**	B,C,D
6-Series (F13) coupe	08.11-12.18	17-21	8x17	26	CSP 18 G.Blk/pol	30	30	0	2272,-	**OE-fit**	B,C,D
650i 18"			8x17	27	CSP 18	30	30	0	2200,-	**OE-fit**	B,C,D
6-Series (F14) gran coupe	01.12-12.18	18-21	8x17	28	CSP 18 G.Blk	30	30	0	2200,-	**OE-fit**	B,C,D
			8x18	11	Nitro Demon	30	30	0	2784,-		D
			8x18	22	ATS Evolution	30	30	0	3016,-	**OE-fit**	B,C,D
			8x18	23	ATS Evolution G.Grey	30	30	0	3116,-	**OE-fit**	B,C,D
			8x18	26	CSP 18 G.Blk/pol	30	30	0	2956,-	**OE-fit**	B,C,D
			8x18	27	CSP 18	30	30	0	2972,-	**OE-fit**	B,C,D
			8x18	28	CSP 18 G.Blk	30	30	0	2972,-	**OE-fit**	B,C,D

Forts. neste side »

Bilmerke - Bilmodell	Årsmodell	Dimensjon	Felgdim.	Bilde	Felgmodell	ET Felg	ET Bil	Avvik ET	Veil. Pris eks. MVA	Merknader	B,C D, M
BMW (forts.)				PCD: **5-120** Bolt - Mutter: **14x1,25B**		CB: **72,5**					
			8x18	46	Image Stella	30	30	0	2276,-	**OE-fit**	B,D
			8x18	47	Image Stella M.Blk	30	30	0	2276,-	**OE-fit**	B,D
			8x19	11	Nitro Demon	30	30	0	3376,-		D
			8x19	26	CSP 18 G.Blk/pol	30	30	0	3596,-	**OE-fit**	B,C,D
			8x19	27	CSP 18	30	30	0	3444,-	**OE-fit**	B,C,D
			8x19	28	CSP 18 G.Blk	30	30	0	3444,-	**OE-fit**	B,C,D
			8,5x19	5	Nitro Volcano G.Gun	30	30	0	4388,-	**OE-fit**	B,C,D
			8,5x19	6	Nitro Volcano	30	30	0	4632,-	**OE-fit**	B,C,D
			9x19	3	Nitro Turismo FF	25	30	10	4660,-	**OE-fit**	B,C,D,M
			9x19	4	Nitro Turismo FF G.Gun/Pol	25	30	10	4812,-	**OE-fit**	B,C,D,M
			9x19	26	CSP 18 G.Blk/pol	40	40	0	3596,-	**OE-fit**, kun bak	B,C,D
			9x19	27	CSP 18	40	40	0	3444,-	**OE-fit**, kun bak	B,C,D
			9x19	28	CSP 18 G.Blk	40	40	0	3444,-	**OE-fit**, kun bak	B,C,D
			9,5x19	5	Nitro Volcano G.Gun	40	40	0	4388,-	**OE-fit**, kun bak	B,C,D
			9,5x19	6	Nitro Volcano	40	40	0	4632,-	**OE-fit**, kun bak	B,C,D
			10x19	3	Nitro Turismo FF	40	40	0	4812,-	**OE-fit**, kun bak	B,C,D
			10x19	4	Nitro Turismo FF G.Gun/Pol	40	40	0	4964,-	**OE-fit**, kun bak	B,C,D
			8,5x20	11	Nitro Demon	30	30	0	3808,-		D
			9x20	5	Nitro Volcano G.Gun	32	30	-4	4824,-	**OE-fit**	B,C,D
			9x20	6	Nitro Volcano	32	30	-4	5164,-	**OE-fit**	B,C,D
			10,5x20	5	Nitro Volcano G.Gun	42	40	-4	4824,-	**OE-fit**, kun bak	B,C,D
			10,5x20	6	Nitro Volcano	42	40	-4	5164,-	**OE-fit**, kun bak	B,C,D
			9x21	5	Nitro Volcano G.Gun	32	30	-4	5540,-	**OE-fit**	B,C,D
			9x21	6	Nitro Volcano	32	30	-4	5996,-	**OE-fit**	B,C,D
			9,5x21	5	Nitro Volcano G.Gun	45	40	-10	5540,-	**OE-fit**, kun bak	B,C,D
			9,5x21	6	Nitro Volcano	45	40	-10	5996,-	**OE-fit**, kun bak	B,C,D
			10,5x21	5	Nitro Volcano G.Gun	42	40	-4	5540,-	**OE-fit**, kun bak	B,C,D
			10,5x21	6	Nitro Volcano	42	40	-4	5996,-	**OE-fit**, kun bak	B,C,D
BMW				PCD: **5-120** Bolt - Mutter: **14x1,25B**		CB: **72,5**					
M6 (F12) cab	02.12-03.18	19-21	9x20	5	Nitro Volcano G.Gun	32	32	0	4824,-	**OE-fit**	B,C,D
M6 (F13) coupe	06.12-03.18	19-21	9x20	6	Nitro Volcano	32	32	0	5164,-	**OE-fit**	B,C,D
M6 (F14) gran coupe	03.13-03.18	19-21	10,5x20	5	Nitro Volcano G.Gun	42	34	-16	4824,-	Kun bak, spacer 15 mm	C,D
			10,5x20	6	Nitro Volcano	42	34	-16	5164,-	Kun bak, spacer 15 mm	C,D
			9x21	5	Nitro Volcano G.Gun	32	32	0	5540,-	**OE-fit**	B,C,D
			9x21	6	Nitro Volcano	32	32	0	5996,-	**OE-fit**	B,C,D
			10,5x21	5	Nitro Volcano G.Gun	42	34	-16	5540,-	Kun bak, spacer 15 mm	C,D
			10,5x21	6	Nitro Volcano	42	34	-16	5996,-	Kun bak, spacer 15 mm	C,D
BMW				PCD: **5-112** Bolt - Mutter: **14x1,25B**		CB: **66,5**					
i8 (I-2)	06.14-06.20	19-21	8x19	2	Nitro Sapphire FF	30	36	12	4684,-		D
			8x19	3	Nitro Turismo FF	30	36	12	4492,-	**OE-fit**	B,D
			8x19	4	Nitro Turismo FF G.Gun/Pol	30	36	12	4644,-	**OE-fit**	B,D
			8x19	16	Advanti Inizio DST	30	36	12	4412,-	**OE-fit**	B,D
			8x19	26	CSP 18 G.Blk/pol	30	36	12	3596,-	**OE-fit**	B,D
			8x19	27	CSP 18	30	36	12	3444,-	**OE-fit**	B,D
			8x19	28	CSP 18 G.Blk	30	36	12	3444,-	**OE-fit**	B,D
			8,5x19	3	Nitro Turismo FF	35	40	10	4492,-	**OE-fit**, kun bak	B,D
			8,5x19	4	Nitro Turismo FF G.Gun/Pol	35	40	10	4644,-	**OE-fit**, kun bak	B,D
			8,5x19	16	Advanti Inizio DST	35	40	10	4412,-	**OE-fit**, kun bak	B,D
			9x19	26	CSP 18 G.Blk/pol	38	40	4	3596,-	**OE-fit**, kun bak	B,D,M
			9x19	27	CSP 18	38	40	4	3444,-	**OE-fit**, kun bak	B,D,M
			9x19	28	CSP 18 G.Blk	38	40	4	3444,-	**OE-fit**, kun bak	B,D,M
BMW				PCD: **5-120** Bolt - Mutter: **14x1,25B**		CB: **72,5**					
5-Series (F07) GT	10.09-12.16	18-22	8x18	11	Nitro Demon	30	30	0	2784,-		D
550i 19"			8x18	22	ATS Evolution	30	30	0	3016,-	**OE-fit**	B,C,D
			8x18	23	ATS Evolution G.Grey	30	30	0	3116,-	**OE-fit**	B,C,D
			8x18	26	CSP 18 G.Blk/pol	30	30	0	2956,-	**OE-fit**	B,C,D
			8x18	27	CSP 18	30	30	0	2972,-	**OE-fit**	B,C,D
			8x18	28	CSP 18 G.Blk	30	30	0	2972,-	**OE-fit**	B,C,D
			8x18	46	Image Stella	30	30	0	2276,-	**OE-fit**	B,D
			8x18	47	Image Stella M.Blk	30	30	0	2276,-	**OE-fit**	B,D
			8x19	11	Nitro Demon	30	30	0	3376,-		D
			8x19	26	CSP 18 G.Blk/pol	30	30	0	3596,-	**OE-fit**	B,C,D
			8x19	27	CSP 18	30	30	0	3444,-	**OE-fit**	B,C,D
			8x19	28	CSP 18 G.Blk	30	30	0	3444,-	**OE-fit**	B,C,D
			8,5x19	5	Nitro Volcano G.Gun	30	30	0	4388,-	**OE-fit**	B,C,D
			8,5x19	6	Nitro Volcano	30	30	0	4632,-	**OE-fit**	B,C,D
			9x19	3	Nitro Turismo FF	25	30	10	4660,-	**OE-fit**	B,C,D
			9x19	4	Nitro Turismo FF G.Gun/Pol	25	30	10	4812,-	**OE-fit**	B,C,D,M
			9x19	26	CSP 18 G.Blk/pol	40	40	0	3596,-	**OE-fit**, kun bak	B,C,D
			9x19	27	CSP 18	40	40	0	3444,-	**OE-fit**, kun bak	B,C,D
			9x19	28	CSP 18 G.Blk	40	40	0	3444,-	**OE-fit**, kun bak	B,C,D
			9,5x19	5	Nitro Volcano G.Gun	40	40	0	4388,-	**OE-fit**, kun bak	B,C,D
			9,5x19	6	Nitro Volcano	40	40	0	4632,-	**OE-fit**, kun bak	B,C,D
			10x19	3	Nitro Turismo FF	40	40	0	4812,-	**OE-fit**, kun bak	B,C,D
			10x19	4	Nitro Turismo FF G.Gun/Pol	40	40	0	4964,-	**OE-fit**, kun bak	B,C,D
			8,5x20	5	Nitro Volcano G.Gun	30	30	0	4824,-	**OE-fit**	B,C,D
			8,5x20	6	Nitro Volcano	30	30	0	5164,-	**OE-fit**	B,C,D
			8,5x20	11	Nitro Demon	30	30	0	3808,-		D
			9x20	5	Nitro Volcano G.Gun	32	30	-4	4824,-	**OE-fit**	B,C,D
			9x20	6	Nitro Volcano	32	30	-4	5164,-	**OE-fit**	B,C,D
			9x20	15	Nitro Magnum	30	30	0	4572,-		D
			10,5x20	5	Nitro Volcano G.Gun	42	40	-4	4824,-	**OE-fit**, kun bak	B,C,D
			10,5x20	6	Nitro Volcano	42	40	-4	5164,-	**OE-fit**, kun bak	B,C,D
			9x21	5	Nitro Volcano G.Gun	32	30	-4	5540,-	**OE-fit**	B,C,D
			9x21	6	Nitro Volcano	32	30	-4	5996,-	**OE-fit**	B,C,D

Forts. neste side »

Bilmerke - Bilmodell	Årsmodell	Dimensjon	Felgdim.	Bilde	Felgmodell	ET Felg	ET Bil	Avvik ET	Veil. Pris eks. MVA	Merknader	B,C D, M
BMW (forts.)				PCD: **5-120** Bolt - Mutter: **14x1,25B** CB: **72,5**							
			10,5x21	5	Nitro Volcano G.Gun	42	40	-4	5540,-	**OE-fit**, kun bak	B,C,D
			10,5x21	6	Nitro Volcano	42	40	-4	5996,-	**OE-fit**, kun bak	B,C,D
			9x22	15	Nitro Magnum	30	30	0	5420,-		D
			10,5x22	15	Nitro Magnum	42	40	-4	5420,-	Kun bak	M
BMW				PCD: **5-120** Bolt - Mutter: **14x1,25B** CB: **72,5**							
7-Series (F01)	11.08-09.15	18-22	8x18	11	Nitro Demon	30	30	0	2784,-		D
760i 19"			8x18	22	ATS Evolution	30	30	0	3016,-	**OE-fit**	B,C,D
			8x18	23	ATS Evolution G.Grey	30	30	0	3116,-	**OE-fit**	B,C,D
			8x18	26	CSP 18 G.Blk/pol	30	30	0	2956,-	**OE-fit**	B,C,D
			8x18	27	CSP 18	30	30	0	2972,-	**OE-fit**	B,C,D
			8x18	28	CSP 18 G.Blk	30	30	0	2972,-	**OE-fit**	B,C,D
			8x18	46	Image Stella	30	30	0	2276,-	**OE-fit**	B,D
			8x18	47	Image Stella M.Blk	30	30	0	2276,-	**OE-fit**	B,D
			8x19	11	Nitro Demon	30	30	0	3376,-		D
			8x19	26	CSP 18 G.Blk/pol	30	30	0	3596,-	**OE-fit**	B,C,D
			8x19	27	CSP 18	30	30	0	3444,-	**OE-fit**	B,C,D
			8x19	28	CSP 18 G.Blk	30	30	0	3444,-	**OE-fit**	B,C,D
			8,5x19	5	Nitro Volcano G.Gun	30	30	0	4388,-	**OE-fit**	B,C,D
			8,5x19	6	Nitro Volcano	30	30	0	4632,-	**OE-fit**	B,C,D
			9x19	3	Nitro Turismo FF	25	30	10	4660,-	**OE-fit**	B,C,D,M
			9x19	4	Nitro Turismo FF G.Gun/Pol	25	30	10	4812,-	**OE-fit**	B,C,D
			9x19	26	CSP 18 G.Blk/pol	40	40	0	3596,-	**OE-fit**, kun bak	B,C,D
			9x19	27	CSP 18	40	40	0	3444,-	**OE-fit**, kun bak	B,C,D
			9x19	28	CSP 18 G.Blk	40	40	0	3444,-	**OE-fit**, kun bak	B,C,D
			9,5x19	5	Nitro Volcano G.Gun	40	40	0	4388,-	**OE-fit**, kun bak	B,C,D
			9,5x19	6	Nitro Volcano	40	40	0	4632,-	**OE-fit**, kun bak	B,C,D
			10x19	3	Nitro Turismo FF	40	40	0	4812,-	**OE-fit**, kun bak	B,C,D
			10x19	4	Nitro Turismo FF G.Gun/Pol	40	40	0	4964,-	**OE-fit**, kun bak	B,C,D
			8,5x20	11	Nitro Demon	30	30	0	3808,-		D
			9x20	5	Nitro Volcano G.Gun	32	30	-4	4824,-	**OE-fit**	B,C,D
			9x20	6	Nitro Volcano	32	30	-4	5164,-	**OE-fit**	B,C,D
			10,5x20	5	Nitro Volcano G.Gun	42	40	-4	4824,-	**OE-fit**, kun bak	B,C,D
			10,5x20	6	Nitro Volcano	42	40	-4	5164,-	**OE-fit**, kun bak	B,C,D
			9x21	5	Nitro Volcano G.Gun	32	30	-4	5540,-	**OE-fit**	B,C,D
			9x21	6	Nitro Volcano	32	30	-4	5996,-	**OE-fit**	B,C,D
			10,5x21	5	Nitro Volcano G.Gun	42	40	-4	5540,-	**OE-fit**, kun bak	B,C,D
			10,5x21	6	Nitro Volcano	42	40	-4	5996,-	**OE-fit**, kun bak	B,C,D
			9x22	15	Nitro Magnum	30	30	0	5420,-		D
			10,5x22	15	Nitro Magnum	42	40	-4	5420,-	Kun bak	M
BMW				PCD: **5-112** Bolt - Mutter: **14x1,25B** CB: **66,5**							
7-Series (G11)	11.15-04.19	17-22	7,5x17	22	ATS Evolution	27	30	6	2268,-	**OE-fit**	B,C,D
750i 18"			7,5x17	23	ATS Evolution G.Grey	27	30	6	2340,-	**OE-fit**	B,C,D
7-Series (G11) facelift	05.19-	17-22	7,5x17	26	CSP 18 G.Blk/pol	27	30	6	2272,-	**OE-fit**	B,C,D
750i 19"			7,5x17	27	CSP 18	27	30	6	2200,-	**OE-fit**	B,C,D
7-Series (G12)	11.15-	17-22	7,5x17	28	CSP 18 G.Blk	27	30	6	2200,-	**OE-fit**	B,C,D
750i 18"			7,5x17	46	Image Stella	27	30	6	1812,-	**OE-fit**	B,D
7-Series (G12) facelift	05.19-	18-22	7,5x17	47	Image Stella M.Blk	27	30	6	1812,-	**OE-fit**	B,D
750i 19"			7,5x17	50	Image Legend	27	30	6	1812,-	**OE-fit**	B,D
760i 20"			8x17	17	BM Drive M.Gun	25	30	10	1736,-		D
			8x18	2	Nitro Sapphire FF	30	30	0	4036,-	**OE-fit**	B,D
			8x18	10	Nitro Demon H.Slv	30	30	0	2972,-	**OE-fit**	B,D
			8x18	16	Advanti Inizio DST	30	30	0	3828,-	**OE-fit**	B,D
			8x18	17	BM Drive M.Gun	30	30	0	2296,-	**OE-fit**	B,D
			8x18	22	ATS Evolution	30	30	0	3016,-	**OE-fit**	B,C,D
			8x18	23	ATS Evolution G.Grey	30	30	0	3116,-	**OE-fit**	B,C,D
			8x18	26	CSP 18 G.Blk/pol	30	30	0	2956,-	**OE-fit**	B,C,D
			8x18	27	CSP 18	30	30	0	2972,-	**OE-fit**	B,C,D
			8x18	28	CSP 18 G.Blk	30	30	0	2972,-	**OE-fit**	B,C,D
			8x18	46	Image Stella	30	30	0	2276,-	**OE-fit**	B,D
			8x18	47	Image Stella M.Blk	30	30	0	2276,-	**OE-fit**	B,D
			8x18	50	Image Legend	30	30	0	2276,-	**OE-fit**	B,D
			8,5x18	2	Nitro Sapphire FF	27	30	6	4036,-		D
			9x18	16	Advanti Inizio DST	40	41	2	3828,-	**OE-fit**, kun bak	B,D
			8x19	2	Nitro Sapphire FF	30	30	0	4684,-	**OE-fit**	B,D
			8x19	3	Nitro Turismo FF	30	30	0	4492,-	**OE-fit**	B,C,D
			8x19	4	Nitro Turismo FF G.Gun/Pol	30	30	0	4644,-	**OE-fit**	B,C,D
			8x19	10	Nitro Demon H.Slv	30	30	0	3624,-	**OE-fit**	B,D
			8x19	16	Advanti Inizio DST	30	30	0	4412,-	**OE-fit**	B,D
			8x19	22	ATS Evolution	30	30	0	3892,-	**OE-fit**	B,C,D
			8x19	23	ATS Evolution G.Grey	30	30	0	4008,-	**OE-fit**	B,C,D
			8x19	26	CSP 18 G.Blk/pol	30	30	0	3596,-	**OE-fit**	B,C,D
			8x19	27	CSP 18	30	30	0	3444,-	**OE-fit**	B,C,D
			8x19	28	CSP 18 G.Blk	30	30	0	3444,-	**OE-fit**	B,C,D
			8,5x19	2	Nitro Sapphire FF	27	30	6	4684,-		D
			8,5x19	5	Nitro Volcano G.Gun	26	30	8	4388,-	**OE-fit**	B,C,D
			8,5x19	6	Nitro Volcano	26	30	8	4632,-	**OE-fit**	B,C,D
			8,5x19	230	Breyton BR-I Slv	25	30	10	2896,-	**OE-fit**	B,C,D
			8,5x19	231	Breyton BR-I M.Blk	25	30	10	2896,-	**OE-fit**	B,C,D
			9x19	12	Nitro Edge M.Blk	25	30	10	3884,-		D
			9x19	26	CSP 18 G.Blk/pol	44	41	-6	3596,-	**OE-fit**, kun bak	B,C,D
			9x19	27	CSP 18	44	41	-6	3444,-	**OE-fit**, kun bak	B,C,D
			9x19	28	CSP 18 G.Blk	44	41	-6	3444,-	**OE-fit**, kun bak	B,C,D
			9x19	230	Breyton BR-I Slv	38	41	6	2896,-	**OE-fit**, kun bak, spacer 11 mm	B,C,D
			9x19	231	Breyton BR-I M.Blk	38	41	6	2896,-	**OE-fit**, kun bak, spacer 11 mm	B,C,D
			9,5x19	3	Nitro Turismo FF	40	41	2	4660,-	**OE-fit**, kun bak	B,C,D
			9,5x19	4	Nitro Turismo FF G.Gun/Pol	40	41	2	4812,-	**OE-fit**, kun bak	B,C,D

Forts. neste side »

Bilmerke - Bilmodell	Årsmodell	Dimensjon	Felgdim.	Bilde	Felgmodell	ET Felg	ET Bil	Avvik ET	Veil. Pris eks. MVA	Merknader	B,C D, M
BMW (forts.)			PCD: **5-112** Bolt - Mutter: **14x1,25B** CB: **66,5**								
			9,5x19	5	Nitro Volcano G.Gun	36	41	10	4388,-	**OE-fit**, kun bak	B,C,D
			9,5x19	6	Nitro Volcano	36	41	10	4632,-	**OE-fit**, kun bak	B,C,D
			9,5x19	16	Advanti Inizio DST	40	41	2	4412,-	**OE-fit**, kun bak	B,D
			8,5x20	1	Nitro Throne FF	30	30	0	5060,-	**OE-fit**	B,D
			8,5x20	2	Nitro Sapphire FF	30	30	0	5216,-	**OE-fit**	B,D
			8,5x20	11	Nitro Demon	25	30	10	3808,-		D
			9x20	3	Nitro Turismo FF	30	30	0	4960,-	**OE-fit**	B,C,D
			9x20	4	Nitro Turismo FF G.Gun/Pol	30	30	0	5048,-	**OE-fit**	B,C,D
			9x20	5	Nitro Volcano G.Gun	26	30	8	4824,-	**OE-fit**	B,C,D
			9x20	6	Nitro Volcano	26	30	8	5164,-	**OE-fit**	B,C,D
			9x20	12	Nitro Edge M.Blk	25	30	10	4220,-		D
			9x20	15	Nitro Magnum	28	30	4	4572,-	**OE-fit**	B,D
			9x20	230	Breyton BR-I Slv	35	30	-10	3224,-	**OE-fit**, spacer 11 mm	B,C,D
			9x20	231	Breyton BR-I M.Blk	35	30	-10	3224,-	**OE-fit**, spacer 11 mm	B,C,D
			9,5x20	230	Breyton BR-I Slv	43	41	-4	3224,-	**OE-fit**, kun bak, spacer 11 mm	B,C,D
			9,5x20	231	Breyton BR-I M.Blk	43	41	-4	3224,-	**OE-fit**, kun bak, spacer 11 mm	B,C,D
			10x20	1	Nitro Throne FF	40	41	2	5308,-	**OE-fit**, kun bak	B,D
			10x20	12	Nitro Edge M.Blk	30	41	22	4220,-	Kun bak	D,M
			10,5x20	1	Nitro Throne FF	40	41	2	5308,-	Kun bak	D,M
			10,5x20	3	Nitro Turismo FF	40	41	2	5116,-	**OE-fit**, kun bak	B,C,D,M
			10,5x20	4	Nitro Turismo FF G.Gun/Pol	40	41	2	5288,-	**OE-fit**, kun bak	B,C,D,M
			10,5x20	5	Nitro Volcano G.Gun	36	41	10	4824,-	**OE-fit**, kun bak	B,C,D
			10,5x20	6	Nitro Volcano	36	41	10	5164,-	**OE-fit**, kun bak	B,C,D
			9x21	5	Nitro Volcano G.Gun	26	30	8	5540,-	**OE-fit**	B,C,D
			9x21	6	Nitro Volcano	26	30	8	5996,-	**OE-fit**	B,C,D
			10,5x21	5	Nitro Volcano G.Gun	36	41	10	5540,-	**OE-fit**, kun bak	B,C,D
			10,5x21	6	Nitro Volcano	36	41	10	5996,-	**OE-fit**, kun bak	B,C,D
			9x22	15	Nitro Magnum	28	30	4	5420,-		D
			10x22	12	Nitro Edge M.Blk	30	41	22	4888,-	Kun bak	D,M
			10,5x22	15	Nitro Magnum	36	41	10	5420,-	Kun bak	D
BMW			PCD: **5-112** Bolt - Mutter: **14x1,25B** CB: **66,5**								
X1 (F48)	09.15-	17-21	7x17	48	Image Motion	47	47	0	1736,-	**OE-fit**	B,D
X2 (F39)	01.18-	17-21	7x17	49	Image Motion G.Gun	47	47	0	1736,-	**OE-fit**	B,D
M35i 19"			7,5x17	9	Nitro Sabre G.Blk	45	47	4	3052,-		D
			7,5x17	22	ATS Evolution	52	47	-10	2268,-	**OE-fit**	B,C,D
			7,5x17	23	ATS Evolution G.Grey	52	47	-10	2340,-	**OE-fit**	B,C,D
			7,5x17	26	CSP 18 G.Blk/pol	52	47	-10	2272,-	**OE-fit**	B,C,D
			7,5x17	27	CSP 18	52	47	-10	2200,-	**OE-fit**	B,C,D
			7,5x17	28	CSP 18 G.Blk	52	47	-10	2200,-	**OE-fit**	B,C,D
			7,5x17	36	Image Colt	45	47	4	1956,-		D
			7,5x17	46	Image Stella	52	47	-10	1812,-	**OE-fit**	B,D
			7,5x17	47	Image Stella M.Blk	52	47	-10	1812,-	**OE-fit**	B,D
			7,5x17	50	Image Legend	47	47	0	1812,-	**OE-fit**	B,D
			7,5x17	92	Image Colt L.Gun	45	47	4	1876,-		D
			7,5x17	230	Breyton BR-I Slv	52	47	-10	2196,-	**OE-fit**	B,C,D
			7,5x17	231	Breyton BR-I M.Blk	52	47	-10	2196,-	**OE-fit**	B,C,D
			8x17	17	BM Drive M.Gun	45	47	4	1736,-		D
			8x17	48	Image Motion	45	47	4	1736,-		D
			7,5x18	2	Nitro Sapphire FF	48	47	-2	3944,-		D
			7,5x18	22	ATS Evolution	51	47	-8	3016,-	**OE-fit**	B,C,D
			7,5x18	23	ATS Evolution G.Grey	51	47	-8	3116,-	**OE-fit**	B,C,D
			7,5x18	46	Image Stella	52	47	-10	2276,-	**OE-fit**	B,D
			7,5x18	47	Image Stella M.Blk	52	47	-10	2276,-	**OE-fit**	B,D
			7,5x18	230	Breyton BR-I Slv	51	47	-8	2348,-	**OE-fit**	B,C,D
			7,5x18	231	Breyton BR-I M.Blk	51	47	-8	2348,-	**OE-fit**	B,C,D
			8x18	7	Nitro Spark G.Blk/Grey	45	47	4	3476,-		D
			8x18	8	Nitro Spark G.Blk/Red	45	47	4	3476,-		D
			8x18	9	Nitro Sabre G.Blk	45	47	4	3496,-		D
			8x18	10	Nitro Demon H.Slv	47	47	0	2972,-		D
			8x18	11	Nitro Demon	47	47	0	2784,-		D
			8x18	16	Advanti Inizio DST	45	47	4	3828,-		D
			8x18	17	BM Drive M.Gun	45	47	4	2296,-		D
			8x18	26	CSP 18 G.Blk/pol	47	47	0	2956,-	**OE-fit**	B,C,D
			8x18	27	CSP 18	47	47	0	2972,-	**OE-fit**	B,C,D
			8x18	28	CSP 18 G.Blk	47	47	0	2972,-	**OE-fit**	B,C,D
			8x18	36	Image Colt	45	47	4	2412,-		D
			8x18	48	Image Motion	45	47	4	2204,-		D
			8x18	50	Image Legend	47	47	0	2276,-	**OE-fit**	B,D
			8x18	92	Image Colt L.Gun	45	47	4	2296,-		D
			7,5x19	2	Nitro Sapphire FF	48	47	-2	4572,-		D
			8x19	4	Nitro Turismo FF G.Gun/Pol	47	47	0	4644,-	**OE-fit**	B,C,D
			8x19	10	Nitro Demon H.Slv	47	47	0	3624,-		D
			8x19	11	Nitro Demon	47	47	0	3376,-		D
			8x19	16	Advanti Inizio DST	45	47	4	4412,-		D
			8x19	22	ATS Evolution	47	47	0	3892,-	**OE-fit**	B,C,D
			8x19	23	ATS Evolution G.Grey	47	47	0	4008,-	**OE-fit**	B,C,D
			8x19	26	CSP 18 G.Blk/pol	47	47	0	3596,-	**OE-fit**	B,C,D
			8x19	27	CSP 18	47	47	0	3444,-	**OE-fit**	B,C,D
			8x19	28	CSP 18 G.Blk	47	47	0	3444,-	**OE-fit**	B,C,D
			8x19	48	Image Motion	45	47	4	2532,-		D
			8x19	230	Breyton BR-I Slv	47	47	0	2896,-	**OE-fit**	B,C,D
			8x19	231	Breyton BR-I M.Blk	47	47	0	2896,-	**OE-fit**	B,C,D
			8,5x19	5	Nitro Volcano G.Gun	45	47	4	4388,-		D
			8,5x19	6	Nitro Volcano	45	47	4	4632,-		D
			8,5x19	9	Nitro Sabre G.Blk	45	47	4	4292,-		D
			8,5x19	36	Image Colt	45	47	4	3028,-		D

Forts. neste side »

Bilmerke - Bilmodell	Årsmodell	Dimensjon	Felgdim.	Bilde	Felgmodell	ET Felg	ET Bil	Avvik ET	Veil. Pris eks. MVA	Merknader	B,C D, M
BMW (forts.)				PCD: **5-112** Bolt - Mutter: **14x1,25B** CB: **66,5**							
			8,5x19	92	Image Colt L.Gun	45	47	4	2876,-		D
			8x20	2	Nitro Sapphire FF	48	47	-2	5096,-		D
			8x20	4	Nitro Turismo FF G.Gun/Pol	47	47	0	4964,-	**OE-fit**	B,C,D
			8,5x20	5	Nitro Volcano G.Gun	45	47	4	4824,-		D
			8,5x20	6	Nitro Volcano	45	47	4	5164,-		D
			8,5x20	7	Nitro Spark G.Blk/Grey	45	47	4	4660,-		D
			8,5x20	8	Nitro Spark G.Blk/Red	45	47	4	4660,-		D
			8,5x20	9	Nitro Sabre G.Blk	45	47	4	4800,-		D
			8,5x20	10	Nitro Demon H.Slv	45	47	4	4104,-		D
			8,5x20	11	Nitro Demon	45	47	4	3808,-		D
			8,5x20	36	Image Colt	45	47	4	3432,-		D
			8,5x20	92	Image Colt L.Gun	45	47	4	3276,-		D
			9x20	5	Nitro Volcano G.Gun	40	47	14	4824,-		D,M
			9x20	6	Nitro Volcano	40	47	14	5164,-		D,M
			9x20	10	Nitro Demon H.Slv	40	47	14	4104,-		D,M
			9x20	11	Nitro Demon	40	47	14	3808,-		D,M
			9x20	12	Nitro Edge M.Blk	40	47	14	4220,-		D,M
			9x21	5	Nitro Volcano G.Gun	40	47	14	5540,-		D,M
			9x21	6	Nitro Volcano	40	47	14	5996,-		D,M
BMW				PCD: **5-120** Bolt - Mutter: **14x1,50B** CB: **72,5**							
X3 (E83)	02.04-10.10	17-21	7,5x17	22	ATS Evolution	37	47	20	2268,-	**OE-fit**	B,C,D
3.0sd 18"			7,5x17	23	ATS Evolution G.Grey	37	47	20	2340,-	**OE-fit**	B,C,D
			7,5x17	26	CSP 18 G.Blk/pol	37	47	20	2272,-	**OE-fit**	B,C,D
			7,5x17	27	CSP 18	37	47	20	2200,-	**OE-fit**	B,C,D
			7,5x17	28	CSP 18 G.Blk	37	47	20	2200,-	**OE-fit**	B,C,D
			7,5x17	46	Image Stella	32	47	30	1812,-	**OE-fit**	B,D
			7,5x17	47	Image Stella M.Blk	32	47	30	1812,-	**OE-fit**	B,D
			8x18	11	Nitro Demon	40	47	14	2784,-		D
			8x18	22	ATS Evolution	43	47	8	3016,-	**OE-fit**	B,C,D
			8x18	23	ATS Evolution G.Grey	43	47	8	3116,-	**OE-fit**	B,C,D
			8x19	11	Nitro Demon	40	47	14	3376,-		D
			8,5x20	11	Nitro Demon	40	47	14	3808,-		D
			9x20	15	Nitro Magnum	40	47	14	4572,-		
			9x22	15	Nitro Magnum	40	47	14	5420,-		
BMW				PCD: **5-120** Bolt - Mutter: **14x1,25B** CB: **72,5**							
X3 (F25)	11.10-09.17	17-22	7,5x17	22	ATS Evolution	37	43	12	2268,-	**OE-fit**	B,C,D
30d, 35d, 35i 18"			7,5x17	23	ATS Evolution G.Grey	37	43	12	2340,-	**OE-fit**	B,C,D
X4 (F26)	07.14-02.18	17-22	7,5x17	26	CSP 18 G.Blk/pol	37	43	12	2272,-	**OE-fit**	B,C,D
35d, 35i 18"			7,5x17	27	CSP 18	37	43	12	2200,-	**OE-fit**	B,C,D
			7,5x17	28	CSP 18 G.Blk	37	43	12	2200,-	**OE-fit**	B,C,D
			7,5x17	50	Image Legend	32	43	22	1812,-	**OE-fit**	B,D
			8x17	26	CSP 18 G.Blk/pol	30	43	26	2272,-	**OE-fit**	B,C,D
			8x17	27	CSP 18	30	43	26	2200,-	**OE-fit**	B,C,D
			8x17	28	CSP 18 G.Blk	30	43	26	2200,-	**OE-fit**	B,C,D
			8x18	11	Nitro Demon	40	43	6	2784,-		D
			8x18	22	ATS Evolution	43	43	0	3016,-	**OE-fit**	B,C,D
			8x18	23	ATS Evolution G.Grey	43	43	0	3116,-	**OE-fit**	B,C,D
			8x18	26	CSP 18 G.Blk/pol	30	43	26	2956,-	**OE-fit**	B,C,D
			8x18	27	CSP 18	30	43	26	2972,-	**OE-fit**	B,C,D
			8x18	28	CSP 18 G.Blk	30	43	26	2972,-	**OE-fit**	B,C,D
			8x18	46	Image Stella	30	43	26	2276,-	**OE-fit**	B,D
			8x18	47	Image Stella M.Blk	30	43	26	2276,-	**OE-fit**	B,D
			8x18	50	Image Legend	34	43	18	2276,-	**OE-fit**	B,D
			8x19	11	Nitro Demon	40	43	6	3376,-		D
			8x19	26	CSP 18 G.Blk/pol	30	43	26	3596,-	**OE-fit**	B,C,D
			8x19	27	CSP 18	30	43	26	3444,-	**OE-fit**	B,C,D
			8x19	28	CSP 18 G.Blk	30	43	26	3444,-	**OE-fit**	B,C,D
			8,5x19	5	Nitro Volcano G.Gun	30	43	26	4388,-	**OE-fit**	B,C,D
			8,5x19	6	Nitro Volcano	30	43	26	4632,-	**OE-fit**	B,C,D
			9x19	11	Nitro Demon	45	48	6	3376,-	Kun bak	D
			9x19	12	Nitro Edge M.Blk	40	43	6	3884,-		
			9x19	22	ATS Evolution	37	43	12	4232,-		B,C
			9x19	23	ATS Evolution G.Grey	37	43	12	4348,-		B,C
			9x19	26	CSP 18 G.Blk/pol	40	48	16	3596,-	**OE-fit**, kun bak	B,C,D
			9x19	27	CSP 18	40	48	16	3444,-	**OE-fit**, kun bak	B,C,D
			9x19	28	CSP 18 G.Blk	40	48	16	3444,-	**OE-fit**, kun bak	B,C,D
			9,5x19	5	Nitro Volcano G.Gun	40	48	16	4388,-	**OE-fit**, kun bak	B,C,D
			9,5x19	6	Nitro Volcano	40	48	16	4632,-	**OE-fit**, kun bak	B,C,D
			8,5x20	5	Nitro Volcano G.Gun	30	43	26	4824,-	**OE-fit**	B,C,D
			8,5x20	6	Nitro Volcano	30	43	26	5164,-	**OE-fit**	B,C,D
			8,5x20	11	Nitro Demon	40	43	6	3808,-		D
			9x20	5	Nitro Volcano G.Gun	32	43	22	4824,-	**OE-fit**	B,C,D
			9x20	6	Nitro Volcano	32	43	22	5164,-	**OE-fit**	B,C,D
			9x20	12	Nitro Edge M.Blk	40	43	6	4220,-		
			9x20	15	Nitro Magnum	30	43	26	4572,-		D
			9,5x20	11	Nitro Demon	45	48	6	3808,-	Kun bak	D
			10x20	12	Nitro Edge M.Blk	40	48	16	4220,-	Kun bak	
			10,5x20	5	Nitro Volcano G.Gun	42	48	12	4824,-	**OE-fit**, kun bak	B,C,D
			10,5x20	6	Nitro Volcano	42	48	12	5164,-	**OE-fit**, kun bak	B,C,D
			9x21	5	Nitro Volcano G.Gun	32	43	22	5540,-	**OE-fit**	B,C,D
			9x21	6	Nitro Volcano	32	43	22	5996,-	**OE-fit**	B,C,D
			10,5x21	5	Nitro Volcano G.Gun	42	48	12	5540,-	**OE-fit**, kun bak	B,C,D
			10,5x21	6	Nitro Volcano	42	48	12	5996,-	**OE-fit**, kun bak	B,C,D
			9x22	12	Nitro Edge M.Blk	40	43	6	4888,-		
			9x22	15	Nitro Magnum	30	43	26	5420,-		D
			10x22	12	Nitro Edge M.Blk	40	48	16	4888,-	Kun bak	
			10,5x22	15	Nitro Magnum	42	48	12	5420,-	Kun bak	M

Bilmerke - Bilmodell	Årsmodell	Dimensjon	Felgdim.	Bilde	Felgmodell	ET Felg	ET Bil	Avvik ET	Veil. Pris eks. MVA	Merknader	B,C D, M
BMW			PCD: **5-112** Bolt - Mutter: **14x1,25B**			CB: **66,5**					
X3 (G01)	10.17-	18-22	7x18	230	Breyton BR-I Slv	22	27	10	2348,-	**OE-fit**	B,C,D
M40i 20"			7x18	231	Breyton BR-I M.Blk	22	27	10	2348,-	**OE-fit**	B,C,D
X4 (G02)	04.18-	18-22	7,5x18	230	Breyton BR-I Slv	25	27	4	2348,-	**OE-fit**	B,C,D
M40d, M40i 20"			7,5x18	231	Breyton BR-I M.Blk	25	27	4	2348,-	**OE-fit**	B,C,D
			8x18	2	Nitro Sapphire FF	30	27	-6	4036,-	**OE-fit**	B,D
			8x18	10	Nitro Demon H.Slv	30	27	-6	2972,-	**OE-fit**	B,D
			8x18	16	Advanti Inizio DST	30	27	-6	3828,-	**OE-fit**	B,D
			8x18	17	BM Drive M.Gun	30	27	-6	2296,-	**OE-fit**	B,D
			8x18	22	ATS Evolution	30	27	-6	3016,-	**OE-fit**	B,C,D
			8x18	23	ATS Evolution G.Grey	30	27	-6	3116,-	**OE-fit**	B,C,D
			8x18	26	CSP 18 G.Blk/pol	30	27	-6	2956,-	**OE-fit**	B,C,D
			8x18	27	CSP 18	30	27	-6	2972,-	**OE-fit**	B,C,D
			8x18	28	CSP 18 G.Blk	30	27	-6	2972,-	**OE-fit**	B,C,D
			8x18	46	Image Stella	30	27	-6	2276,-	**OE-fit**	B,D
			8x18	47	Image Stella M.Blk	30	27	-6	2276,-	**OE-fit**	B,D
			8x18	50	Image Legend	30	27	-6	2276,-	**OE-fit**	B,D
			8,5x18	2	Nitro Sapphire FF	27	27	0	4036,-		D
			9x18	16	Advanti Inizio DST	40	43	6	3828,-	**OE-fit**, kun bak	B,D
			7,5x19	230	Breyton BR-I Slv	32	27	-10	2896,-	**OE-fit**	B,C,D
			7,5x19	231	Breyton BR-I M.Blk	32	27	-10	2896,-	**OE-fit**	B,C,D
			8x19	2	Nitro Sapphire FF	30	27	-6	4684,-	**OE-fit**	B,D
			8x19	3	Nitro Turismo FF	30	27	-6	4492,-	**OE-fit**	B,C,D
			8x19	4	Nitro Turismo FF G.Gun/Pol	30	27	-6	4644,-	**OE-fit**	B,C,D
			8x19	10	Nitro Demon H.Slv	30	27	-6	3624,-	**OE-fit**	B,D
			8x19	16	Advanti Inizio DST	30	27	-6	4412,-	**OE-fit**	B,D
			8x19	22	ATS Evolution	30	27	-6	3892,-	**OE-fit**	B,C,D
			8x19	23	ATS Evolution G.Grey	30	27	-6	4008,-	**OE-fit**	B,C,D
			8x19	26	CSP 18 G.Blk/pol	30	27	-6	3596,-	**OE-fit**	B,C,D
			8x19	27	CSP 18	30	27	-6	3444,-	**OE-fit**	B,C,D
			8x19	28	CSP 18 G.Blk	30	27	-6	3444,-	**OE-fit**	B,C,D
			8,5x19	2	Nitro Sapphire FF	27	27	0	4684,-		D
			8,5x19	5	Nitro Volcano G.Gun	26	27	2	4388,-	**OE-fit**	B,C,D
			8,5x19	6	Nitro Volcano	26	27	2	4632,-	**OE-fit**	B,C,D
			9x19	26	CSP 18 G.Blk/pol	44	43	-2	3596,-	**OE-fit**, kun bak	B,C,D
			9x19	27	CSP 18	44	43	-2	3444,-	**OE-fit**, kun bak	B,C,D
			9x19	28	CSP 18 G.Blk	44	43	-2	3444,-	**OE-fit**, kun bak	B,C,D
			9,5x19	3	Nitro Turismo FF	40	43	6	4660,-	**OE-fit**, kun bak	B,C,D
			9,5x19	4	Nitro Turismo FF G.Gun/Pol	40	43	6	4812,-	**OE-fit**, kun bak	B,C,D
			9,5x19	5	Nitro Volcano G.Gun	36	43	14	4388,-	**OE-fit**, kun bak	B,C,D
			9,5x19	6	Nitro Volcano	36	43	14	4632,-	**OE-fit**, kun bak	B,C,D
			9,5x19	16	Advanti Inizio DST	40	43	6	4412,-	**OE-fit**, kun bak	B,D
			8x20	230	Breyton BR-I Slv	27	27	0	3224,-	**OE-fit**	B,C,D
			8x20	231	Breyton BR-I M.Blk	27	27	0	3224,-	**OE-fit**	B,C,D
			8,5x20	1	Nitro Throne FF	30	27	-6	5060,-	**OE-fit**	B,D
			8,5x20	2	Nitro Sapphire FF	30	27	-6	5216,-	**OE-fit**	B,D
			8,5x20	11	Nitro Demon	25	27	4	3808,-		D
			9x20	3	Nitro Turismo FF	30	27	-6	4960,-	**OE-fit**	B,C,D
			9x20	4	Nitro Turismo FF G.Gun/Pol	30	27	-6	5048,-	**OE-fit**	B,C,D
			9x20	5	Nitro Volcano G.Gun	26	27	2	4824,-	**OE-fit**	B,C,D
			9x20	6	Nitro Volcano	26	27	2	5164,-	**OE-fit**	B,C,D
			9x20	10	Nitro Demon H.Slv	30	27	-6	4104,-		D
			9x20	11	Nitro Demon	30	27	-6	3808,-		D
			9x20	12	Nitro Edge M.Blk	25	27	4	4220,-		D
			9x20	15	Nitro Magnum	28	27	-2	4572,-	**OE-fit**	B,D
			9x20	230	Breyton BR-I Slv	35	43	16	3224,-	**OE-fit**, kun bak	B,C,D
			9x20	231	Breyton BR-I M.Blk	35	43	16	3224,-	**OE-fit**, kun bak	B,C,D
			9,5x20	10	Nitro Demon H.Slv	45	43	-4	4104,-	Kun bak	D
			9,5x20	11	Nitro Demon	45	43	-4	3808,-	Kun bak	D
			9,5x20	230	Breyton BR-I Slv	43	43	0	3224,-	**OE-fit**, kun bak	B,C,D
			9,5x20	231	Breyton BR-I M.Blk	43	43	0	3224,-	**OE-fit**, kun bak	B,C,D
			10x20	1	Nitro Throne FF	40	43	6	5308,-	**OE-fit**, kun bak	B,D
			10,5x20	3	Nitro Turismo FF	40	43	6	5116,-	**OE-fit**, kun bak	B,C,D,M
			10,5x20	4	Nitro Turismo FF G.Gun/Pol	40	43	6	5288,-	**OE-fit**, kun bak	B,C,D,M
			10,5x20	5	Nitro Volcano G.Gun	36	43	14	4824,-	**OE-fit**, kun bak	B,C,D,M
			10,5x20	6	Nitro Volcano	36	43	14	5164,-	**OE-fit**, kun bak	B,C,D,M
			9x21	5	Nitro Volcano G.Gun	26	27	2	5540,-	**OE-fit**	B,C,D
			9x21	6	Nitro Volcano	26	27	2	5996,-	**OE-fit**	B,C,D
			10,5x21	5	Nitro Volcano G.Gun	36	43	14	5540,-	**OE-fit**, kun bak	B,C,D,M
			10,5x21	6	Nitro Volcano	36	43	14	5996,-	**OE-fit**, kun bak	B,C,D,M
			9x22	12	Nitro Edge M.Blk	25	27	4	4888,-		D
			9x22	15	Nitro Magnum	28	27	-2	5420,-	**OE-fit**	B,D
			10,5x22	15	Nitro Magnum	36	43	14	5420,-	**OE-fit**, kun bak	B,D
BMW			PCD: **5-112** Bolt - Mutter: **14x1,25B**			CB: **66,5**					
X3 (G01) M	06.19-	20-22	9x20	3	Nitro Turismo FF	30	31	2	4960,-	**OE-fit**	B,C,D
X4 (G02) M	06.19-	20-22	9x20	4	Nitro Turismo FF G.Gun/Pol	30	31	2	5048,-	**OE-fit**	B,C,D
			9x20	5	Nitro Volcano G.Gun	26	31	10	4824,-	**OE-fit**	B,C,D
			9x20	6	Nitro Volcano	26	31	10	5164,-	**OE-fit**	B,C,D
			9,5x20	3	Nitro Turismo FF	30	31	2	4960,-	**OE-fit**	B,C,D
			9,5x20	4	Nitro Turismo FF G.Gun/Pol	30	31	2	5048,-	**OE-fit**	B,C,D
			10,5x20	3	Nitro Turismo FF	40	39	-2	5116,-	**OE-fit**, kun bak	B,C,D
			10,5x20	4	Nitro Turismo FF G.Gun/Pol	40	39	-2	5288,-	**OE-fit**, kun bak	B,C,D
			10,5x20	5	Nitro Volcano G.Gun	36	39	6	4824,-	**OE-fit**, kun bak	B,C,D
			10,5x20	6	Nitro Volcano	36	39	6	5164,-	**OE-fit**, kun bak	B,C,D
			9x21	5	Nitro Volcano G.Gun	26	31	10	5540,-	**OE-fit**	B,C,D
			9x21	6	Nitro Volcano	26	31	10	5996,-	**OE-fit**	B,C,D
			10,5x21	5	Nitro Volcano G.Gun	36	39	6	5540,-	**OE-fit**, kun bak	B,C,D

Forts. neste side »

Bilmerke - Bilmodell	Årsmodell	Dimensjon	Felgdim.	Bilde	Felgmodell	ET Felg	ET Bil	Avvik ET	Veil. Pris eks. MVA	Merknader	B,C D, M
BMW (forts.)				PCD: **5-112** Bolt - Mutter: **14x1,25B**		CB: **66,5**					
			10,5x21	6	Nitro Volcano	36	39	6	5996,-	**OE-fit**, kun bak	B,C,D
			9x22	12	Nitro Edge M.Blk	25	31	12	4888,-		D
			9x22	15	Nitro Magnum	28	31	6	5420,-		D
			10x22	12	Nitro Edge M.Blk	30	39	18	4888,-	Kun bak	D,M
			10,5x22	15	Nitro Magnum	36	39	6	5420,-	Kun bak	D
BMW				PCD: **5-120** Bolt - Mutter: **14x1,50B**		CB: **72,5**					
X5 (E53)	03.00-01.07	17-23	9x19	10	Nitro Demon H.Slv	40	40	0	3624,-		
X5 (E53) 4.6iS, 4.8iS	03.00-01.07	18-23	9x19	12	Nitro Edge M.Blk	40	40	0	3884,-		
			9x19	26	CSP 18 G.Blk/pol	37	40	6	3596,-		B,C
			9x19	27	CSP 18	37	40	6	3444,-		B,C
			9x19	28	CSP 18 G.Blk	37	40	6	3444,-		B,C
			9x20	12	Nitro Edge M.Blk	40	40	0	4220,-		
			9x20	15	Nitro Magnum	40	40	0	4572,-		
			9,5x20	10	Nitro Demon H.Slv	40	40	0	4104,-		
			10x20	12	Nitro Edge M.Blk	40	40	0	4220,-		
			9x22	12	Nitro Edge M.Blk	40	40	0	4888,-		
			9x22	15	Nitro Magnum	40	40	0	5420,-		
			10x22	12	Nitro Edge M.Blk	40	40	0	4888,-		
BMW				PCD: **5-120** Bolt - Mutter: **14x1,25B**		CB: **74,1**					
X5 (E70)	01.07-06.13	18-23	9x19	10	Nitro Demon H.Slv	40	46	12	3624,-		D
M 50d 20"			9x19	12	Nitro Edge M.Blk	40	46	12	3884,-		D
			9x19	22	ATS Evolution	48	46	-4	4232,-	**OE-fit**	B,C,D
			9x19	23	ATS Evolution G.Grey	48	46	-4	4348,-	**OE-fit**	B,C,D
			9x19	26	CSP 18 G.Blk/pol	37	46	18	3596,-	**OE-fit**	B,C,D
			9x19	27	CSP 18	37	46	18	3444,-	**OE-fit**	B,C,D
			9x19	28	CSP 18 G.Blk	37	46	18	3444,-	**OE-fit**	B,C,D
			9x20	15	Nitro Magnum	40	46	12	4572,-		D
			9,5x20	10	Nitro Demon H.Slv	40	46	12	4104,-		D
			10x20	3	Nitro Turismo FF	40	46	12	5116,-	**OE-fit**	B,C,D
			10x20	4	Nitro Turismo FF G.Gun/Pol	40	46	12	5288,-	**OE-fit**	B,C,D
			10x20	12	Nitro Edge M.Blk	40	46	12	4220,-		D
			11,5x20	3	Nitro Turismo FF	35	46	22	5296,-	**OE-fit**, kun bak	B,C,D
			11,5x20	4	Nitro Turismo FF G.Gun/Pol	35	46	22	5416,-	**OE-fit**, kun bak	B,C,D
			9x22	12	Nitro Edge M.Blk	40	46	12	4888,-		D
			9x22	15	Nitro Magnum	40	46	12	5420,-		D
			10x22	12	Nitro Edge M.Blk	40	46	12	4888,-		D
			10,5x22	15	Nitro Magnum	42	46	8	5420,-	Kun bak	D,M
BMW				PCD: **5-120** Bolt - Mutter: **14x1,25B**		CB: **74,1**					
X5 (F15)	07.13-10.18	18-23	9x19	10	Nitro Demon H.Slv	40	46	12	3624,-		D
50i 19"			9x19	12	Nitro Edge M.Blk	40	46	12	3884,-		D
			9x19	22	ATS Evolution	37	46	18	4232,-	**OE-fit**	B,C,D
			9x19	23	ATS Evolution G.Grey	37	46	18	4348,-	**OE-fit**	B,C,D
			9x19	26	CSP 18 G.Blk/pol	37	46	18	3596,-	**OE-fit**	B,C,D
			9x19	27	CSP 18	37	46	18	3444,-	**OE-fit**	B,C,D
			9x19	28	CSP 18 G.Blk	37	46	18	3444,-	**OE-fit**	B,C,D
			9x20	15	Nitro Magnum	40	46	12	4572,-		D
			9,5x20	10	Nitro Demon H.Slv	40	46	12	4104,-		D
			10x20	3	Nitro Turismo FF	40	46	12	5116,-	**OE-fit**	B,C,D
			10x20	4	Nitro Turismo FF G.Gun/Pol	40	46	12	5288,-	**OE-fit**	B,C,D
			10x20	12	Nitro Edge M.Blk	40	46	12	4220,-		D
			11,5x20	3	Nitro Turismo FF	35	53	36	5296,-	**OE-fit**, kun bak	B,C,D
			11,5x20	4	Nitro Turismo FF G.Gun/Pol	35	53	36	5416,-	**OE-fit**, kun bak	B,C,D
			9x22	12	Nitro Edge M.Blk	40	46	12	4888,-		D
			9x22	15	Nitro Magnum	40	46	12	5420,-		D
			10x22	12	Nitro Edge M.Blk	40	46	12	4888,-		D
			10,5x22	15	Nitro Magnum	42	53	22	5420,-	Kun bak	D
BMW				PCD: **5-120** Bolt - Mutter: **14x1,25B**		CB: **74,1**					
X5 (F15) M 50d	08.13-10.18	19-22	9x19	10	Nitro Demon H.Slv	40	37	-6	3624,-		D
X6 (F16) M 50d	12.14-07.19	19-22	9x19	12	Nitro Edge M.Blk	40	37	-6	3884,-	Spacer bak 20 mm	D
			9x19	22	ATS Evolution	37	37	0	4232,-	**OE-fit**	B,C,D
			9x19	22	ATS Evolution	18	21	6	4232,-	**OE-fit**, kun bak	B,C,D
			9x19	23	ATS Evolution G.Grey	37	37	0	4348,-	**OE-fit**	B,C,D
			9x19	23	ATS Evolution G.Grey	18	21	6	4348,-	**OE-fit**, kun bak	B,C,D
			9x19	26	CSP 18 G.Blk/pol	37	37	0	3596,-	**OE-fit**	B,C,D
			9x19	27	CSP 18	37	37	0	3444,-	**OE-fit**	B,C,D
			9x19	28	CSP 18 G.Blk	37	37	0	3444,-	**OE-fit**	B,C,D
			9,5x20	10	Nitro Demon H.Slv	40	37	-6	4104,-		D
			10x20	3	Nitro Turismo FF	40	37	-6	5116,-	**OE-fit**	B,C,D
			10x20	4	Nitro Turismo FF G.Gun/Pol	40	37	-6	5288,-	**OE-fit**	B,C,D
			10x20	12	Nitro Edge M.Blk	40	37	-6	4220,-	Spacer bak 20 mm	D
			11,5x20	3	Nitro Turismo FF	35	21	-28	5296,-	**OE-fit**, kun bak	B,C,D
			11,5x20	4	Nitro Turismo FF G.Gun/Pol	35	21	-28	5416,-	**OE-fit**, kun bak	B,C,D
			10x22	12	Nitro Edge M.Blk	40	37	-6	4888,-	Spacer bak 20 mm	D
BMW				PCD: **5-112** Bolt - Mutter: **14x1,25B**		CB: **66,5**					
X5 (G05)	11.18-	18-23	9x19	26	CSP 18 G.Blk/pol	38	35	-6	3596,-	**OE-fit**	B,C,D
45e 19", M50d, M50i 20"			9x19	27	CSP 18	38	35	-6	3444,-	**OE-fit**	B,C,D
Biler med M-bremser 20"			9x19	28	CSP 18 G.Blk	38	35	-6	3444,-	**OE-fit**	B,C,D
X6 (G06)	08.19-	19-23	9x19	230	Breyton BR-I Slv	38	35	-6	2896,-	**OE-fit**	B,C,D
M50d, M50i 20"			9x19	231	Breyton BR-I M.Blk	38	35	-6	2896,-	**OE-fit**	B,C,D
			9x20	1	Nitro Throne FF	35	35	0	5060,-	**OE-fit**	B,D
			9x20	2	Nitro Sapphire FF	38	35	-6	5216,-		D
			9x20	3	Nitro Turismo FF	30	35	10	4960,-	**OE-fit**	B,C,D
			9x20	4	Nitro Turismo FF G.Gun/Pol	30	35	10	5048,-	**OE-fit**	B,C,D
			9x20	10	Nitro Demon H.Slv	30	35	10	4104,-		D
			9x20	15	Nitro Magnum	35	35	0	4572,-	**OE-fit**	B,D

Forts. neste side »

Bilmerke - Bilmodell	Årsmodell	Dimensjon	Felgdim.	Bilde	Felgmodell	ET Felg	ET Bil	Avvik ET	Veil. Pris eks. MVA	Merknader	B,C D, M
BMW (forts.)			PCD: **5-112** Bolt - Mutter: **14x1,25B** CB: **66,5**								
			9x20	96	Image Colt SUV G.Blk/Pol	35	35	0	4124,-	**OE-fit**	B,D
			9x20	97	Image Colt SUV L.Gun	35	35	0	4008,-	**OE-fit**	B,D
			9x20	230	Breyton BR-I Slv	35	35	0	3224,-	**OE-fit**	B,C,D
			9x20	231	Breyton BR-I M.Blk	35	35	0	3224,-	**OE-fit**	B,C,D
			10,5x20	1	Nitro Throne FF	40	43	6	5308,-	**OE-fit**, kun bak	B,D
			10,5x20	3	Nitro Turismo FF	40	43	6	5116,-	**OE-fit**, kun bak	B,C,D
			10,5x20	4	Nitro Turismo FF G.Gun/Pol	40	43	6	5288,-	**OE-fit**, kun bak	B,C,D
			11x20	3	Nitro Turismo FF	35	43	16	5296,-	**OE-fit**, kun bak	B,C,D
			11x20	4	Nitro Turismo FF G.Gun/Pol	35	43	16	5416,-	**OE-fit**, kun bak	B,C,D
			9x22	15	Nitro Magnum	35	35	0	5420,-	**OE-fit**	B,D
			9,5x22	1	Nitro Throne FF	35	35	0	6276,-	**OE-fit**	B,D
			10,5x22	1	Nitro Throne FF	40	43	6	6572,-	**OE-fit**, kun bak	B,D
			10,5x22	15	Nitro Magnum	42	43	2	5420,-	**OE-fit**, kun bak	B,D
BMW			PCD: **5-112** Bolt - Mutter: **14x1,25B** CB: **66,5**								
X5 (G05) M	02.20-	21-23	10,5x22	1	Nitro Throne FF	30	31	2	6572,-	**OE-fit**	B,D
Competition 21" fram/22" bak			11x22	1	Nitro Throne FF	45	43	-4	6572,-	**OE-fit**, kun bak	B,D
X6 (G06) M Competition	02.20-	21-23									
BMW			PCD: **5-120** Bolt - Mutter: **14x1,25B** CB: **74,1**								
X5 (E70) M	11.09-11.13	20-23	9x19	10	Nitro Demon H.Slv	40	48	16	3624,-		D
(navhål bak 72.5)			9x19	12	Nitro Edge M.Blk	40	48	16	3884,-	Spacer bak 20 mm	D
X6 (E71)	02.08-09.14	19-23	9x19	22	ATS Evolution	48	48	0	4232,-	**OE-fit**	B,C,D
M 50d 20"			9x19	22	ATS Evolution	18	18	0	4232,-	**OE-fit**, kun bak	B,C,D
(navhål bak 72.5)			9x19	23	ATS Evolution G.Grey	48	48	0	4348,-	**OE-fit**	B,C,D
X6 (E71) M	11.09-09.14	20-23	9x19	23	ATS Evolution G.Grey	18	18	0	4348,-	**OE-fit**, kun bak	B,C,D
(navhål bak 72.5)			9x19	26	CSP 18 G.Blk/pol	37	48	22	3596,-	**OE-fit**	B,C,D
			9x19	27	CSP 18	37	48	22	3444,-	**OE-fit**	B,C,D
			9x19	28	CSP 18 G.Blk	37	48	22	3444,-	**OE-fit**	B,C,D
			9x20	15	Nitro Magnum	40	48	16	4572,-	Spacer bak 20 mm	D
			9,5x20	10	Nitro Demon H.Slv	40	48	16	4104,-		D
			10x20	3	Nitro Turismo FF	40	48	16	5116,-	**OE-fit**	B,C,D
			10x20	4	Nitro Turismo FF G.Gun/Pol	40	48	16	5288,-	**OE-fit**	B,C,D
			10x20	12	Nitro Edge M.Blk	40	48	16	4220,-	Spacer bak 20 mm	D
			11,5x20	3	Nitro Turismo FF	35	18	-34	5296,-	**OE-fit**, kun bak	B,C,D
			11,5x20	4	Nitro Turismo FF G.Gun/Pol	35	18	-34	5416,-	**OE-fit**, kun bak	B,C,D
			9x22	15	Nitro Magnum	40	48	16	5420,-		D
			10x22	12	Nitro Edge M.Blk	40	48	16	4888,-	Spacer bak 20 mm	D
			10,5x22	15	Nitro Magnum	42	18	-48	5420,-	Kun bak, spacer 20 mm	D
BMW			PCD: **5-120** Bolt - Mutter: **14x1,25B** CB: **74,1**								
X6 (F16)	10.14-07.19	19-23	9x19	10	Nitro Demon H.Slv	40	46	12	3624,-		D
			9x19	12	Nitro Edge M.Blk	40	46	12	3884,-	Spacer bak 20 mm	D
			9x19	22	ATS Evolution	48	46	-4	4232,-	**OE-fit**	B,C,D
			9x19	22	ATS Evolution	18	18	0	4232,-	**OE-fit**, kun bak	B,C,D
			9x19	23	ATS Evolution G.Grey	48	46	-4	4348,-	**OE-fit**	B,C,D
			9x19	23	ATS Evolution G.Grey	18	18	0	4348,-	**OE-fit**, kun bak	B,C,D
			9x19	26	CSP 18 G.Blk/pol	37	46	18	3596,-	**OE-fit**	B,C,D
			9x19	27	CSP 18	37	46	18	3444,-	**OE-fit**	B,C,D
			9x19	28	CSP 18 G.Blk	37	46	18	3444,-	**OE-fit**	B,C,D
			9x20	15	Nitro Magnum	40	46	12	4572,-	Spacer bak 20 mm	D
			9,5x20	10	Nitro Demon H.Slv	40	46	12	4104,-		D
			10x20	3	Nitro Turismo FF	40	46	12	5116,-	**OE-fit**	B,C,D
			10x20	4	Nitro Turismo FF G.Gun/Pol	40	46	12	5288,-	**OE-fit**	B,C,D
			10x20	12	Nitro Edge M.Blk	40	46	12	4220,-	Spacer bak 20 mm	D
			11,5x20	3	Nitro Turismo FF	35	18	-34	5296,-	**OE-fit**, kun bak	B,C,D
			11,5x20	4	Nitro Turismo FF G.Gun/Pol	35	18	-34	5416,-	**OE-fit**, kun bak	B,C,D
			9x22	15	Nitro Magnum	40	46	12	5420,-		D
			10x22	12	Nitro Edge M.Blk	40	46	12	4888,-	Spacer bak 20 mm	D
			10,5x22	15	Nitro Magnum	42	18	-48	5420,-	Kun bak, spacer 20 mm	D
BMW			PCD: **5-120** Bolt - Mutter: **14x1,25B** CB: **74,1**								
X5 (F15) M	03.15-10.18	20-23	9,5x20	10	Nitro Demon H.Slv	40	40	0	4104,-		D
X6 (F16) M	03.15-07.19	20-23	10x20	3	Nitro Turismo FF	40	40	0	5116,-	**OE-fit**	B,C,D
			10x20	4	Nitro Turismo FF G.Gun/Pol	40	40	0	5288,-	**OE-fit**	B,C,D
			10x20	12	Nitro Edge M.Blk	40	40	0	4220,-		D
			11,5x20	3	Nitro Turismo FF	35	38	6	5296,-	**OE-fit**, kun bak	B,C,D
			11,5x20	4	Nitro Turismo FF G.Gun/Pol	35	38	6	5416,-	**OE-fit**, kun bak	B,C,D
			10x22	12	Nitro Edge M.Blk	40	40	0	4888,-		D
BMW			PCD: **5-112** Bolt - Mutter: **14x1,25B** CB: **66,5**								
X7 (G07)	02.19-	20-24	9x20	96	Image Colt SUV G.Blk/Pol	35	36	2	4124,-	**OE-fit**	B,D
M50d, M50i 21"			9x20	97	Image Colt SUV L.Gun	35	36	2	4008,-	**OE-fit**	B,D
			9x20	230	Breyton BR-I Slv	35	36	2	3224,-	**OE-fit**	B,C,D
			9x20	231	Breyton BR-I M.Blk	35	36	2	3224,-	**OE-fit**	B,C,D
			9,5x22	1	Nitro Throne FF	30	36	12	6276,-	**OE-fit**	B,D
			10,5x22	1	Nitro Throne FF	40	43	6	6572,-	**OE-fit**, kun bak	B,D
BUICK			PCD: **5-100** Bolt - Mutter: **12x1,50** CB: **57,1**								
Century	82-90	14-18	6x15	48	Image Motion	40	42	4	1224,-		
Skylark fwd	81-91	14-18	6,5x16	36	Image Colt	40	42	4	1624,-		
			6,5x16	92	Image Colt L.Gun	40	42	4	1548,-		
BUICK			PCD: **5-115** Bolt - Mutter: **12x1,50** CB: **70,3**								
Century	90-98	15-17	6,5x16	36	Image Colt	35	43	16	1624,-		
Park Avenue	92-05	15-18	6,5x16	92	Image Colt L.Gun	35	43	16	1548,-		
Regal	88-96	15-17	7,5x17	36	Image Colt	35	43	16	1956,-		
Rendezvous	02-07.07	16-18	7,5x17	46	Image Stella	41	43	4	1812,-		D
Riviera	86-98	15-17	7,5x17	47	Image Stella M.Blk	41	43	4	1812,-		D
			7,5x17	92	Image Colt L.Gun	35	43	16	1876,-		
			8x18	7	Nitro Spark G.Blk/Grey	35	43	16	3476,-		
			8x18	8	Nitro Spark G.Blk/Red	35	43	16	3476,-		

Bilmerke - Bilmodell	Årsmodell	Dimensjon	Felgdim.	Bilde	Felgmodell	ET Felg	ET Bil	Avvik ET	Veil. Pris eks. MVA	Merknader	B,C D, M
CADILLAC				PCD: **5-100** Bolt - Mutter: **12x1,50** CB: **57,1**							
Cimarron	81-85	14-18	6x15	48	Image Motion	40	42	4	1224,-		
			6,5x16	36	Image Colt	40	42	4	1624,-		
			6,5x16	92	Image Colt L.Gun	40	42	4	1548,-		
CADILLAC				PCD: **5-115** Bolt - Mutter: **14x1,50** CB: **70,3**							
DTS	06-11	17-20	7,5x17	36	Image Colt	45	46	2	1956,-		
			7,5x17	46	Image Stella	41	46	10	1812,-		D
			7,5x17	47	Image Stella M.Blk	41	46	10	1812,-		D
			7,5x17	92	Image Colt L.Gun	45	46	2	1876,-		
			8x18	7	Nitro Spark G.Blk/Grey	45	46	2	3476,-		
			8x18	8	Nitro Spark G.Blk/Red	45	46	2	3476,-		
			8x18	9	Nitro Sabre G.Blk	45	46	2	3496,-		
			8x18	46	Image Stella	41	46	10	2276,-		D
			8x18	47	Image Stella M.Blk	41	46	10	2276,-		D
CADILLAC				PCD: **5-115** Bolt - Mutter: **12x1,50** CB: **70,3**							
ATS (GMT166) sedan	03.12-09.15	18-20	7,5x18	2	Nitro Sapphire FF	35	42	14	3944,-		
			8x18	7	Nitro Spark G.Blk/Grey	35	42	14	3476,-		
			8x18	8	Nitro Spark G.Blk/Red	35	42	14	3476,-		
			8x18	36	Image Colt	35	42	14	2412,-		
			8x18	46	Image Stella	41	42	2	2276,-		D
			8x18	47	Image Stella M.Blk	41	42	2	2276,-		D
			8x18	48	Image Motion	38	42	8	2204,-		D
			8x18	49	Image Motion G.Gun	38	42	8	2204,-		D
			8x18	92	Image Colt L.Gun	35	42	14	2296,-		
			7,5x19	2	Nitro Sapphire FF	35	42	14	4572,-		
			8x19	11	Nitro Demon	38	42	8	3376,-		
			8,5x19	9	Nitro Sabre G.Blk	35	42	14	4292,-		
			8x20	2	Nitro Sapphire FF	35	42	14	5096,-		
			8,5x20	7	Nitro Spark G.Blk/Grey	35	42	14	4660,-		
			8,5x20	8	Nitro Spark G.Blk/Red	35	42	14	4660,-		
			8,5x20	9	Nitro Sabre G.Blk	35	42	14	4800,-		
			8,5x20	11	Nitro Demon	38	42	8	3808,-		
CADILLAC				PCD: **5-120** Bolt - Mutter: **14x1,50** CB: **67,1**							
ATS (GMT166) sedan	10.15-	18-20	8x18	11	Nitro Demon	40	42	4	2784,-		
			8x19	11	Nitro Demon	40	42	4	3376,-		
			8,5x20	11	Nitro Demon	40	42	4	3808,-		
CADILLAC				PCD: **5-120** Bolt - Mutter: **14x1,50** CB: **67,1**							
ATS (GMT166) coupe	10.15-	18-20	8x18	11	Nitro Demon	30	32	4	2784,-		
			8x18	46	Image Stella	30	32	4	2276,-		
			8x18	47	Image Stella M.Blk	30	32	4	2276,-		
			8x19	11	Nitro Demon	30	32	4	3376,-		
			8,5x20	11	Nitro Demon	30	32	4	3808,-		
CADILLAC				PCD: **5-120** Bolt - Mutter: **14x1,50** CB: **67,1**							
ATS (GMT166) V coupe	10.15-	18-20	8x18	11	Nitro Demon	30	28	-4	2784,-		
			8x19	11	Nitro Demon	30	28	-4	3376,-		
			9x19	3	Nitro Turismo FF	25	28	6	4660,-		
			9x19	4	Nitro Turismo FF G.Gun/Pol	25	28	6	4812,-		
			10x19	3	Nitro Turismo FF	40	36	-8	4812,-	Kun bak	
			10x19	4	Nitro Turismo FF G.Gun/Pol	40	36	-8	4964,-	Kun bak	
			8,5x20	11	Nitro Demon	30	28	-4	3808,-		
CADILLAC				PCD: **5-120,6** Bolt - Mutter: **14x1,50** CB: **67,1**							
CTS (GMX322)	11.07-09.13	17-20	8x18	11	Nitro Demon	40	48	16	2784,-		
3.6 18"			8x19	11	Nitro Demon	40	48	16	3376,-		
			8,5x20	11	Nitro Demon	40	48	16	3808,-		
CADILLAC				PCD: **5-110** Bolt - Mutter: **12x1,50B** CB: **65,1**							
BLS	05.06-08.09	15-20	6x15	48	Image Motion	38	41	6	1224,-		D
1.9D (132kW) 16"			6,5x16	36	Image Colt	40	41	2	1624,-		D
2.0T (154kW), 2.8T 16"			6,5x16	48	Image Motion	40	41	2	1468,-	**OE-fit**	B,D
			6,5x16	92	Image Colt L.Gun	40	41	2	1548,-		D
			7x16	17	BM Drive M.Gun	40	41	2	1476,-	Eksenterbolter	D
			7x17	48	Image Motion	40	41	2	1736,-	**OE-fit**	B,D
			7,5x17	36	Image Colt	40	41	2	1956,-	**OE-fit**	B,D
			7,5x17	92	Image Colt L.Gun	40	41	2	1876,-		D
			8x17	48	Image Motion	34	41	14	1736,-		D,M
			8x18	36	Image Colt	40	41	2	2412,-	**OE-fit**	B,D
			8x18	48	Image Motion	34	41	14	2204,-		D,M
			8x18	92	Image Colt L.Gun	40	41	2	2296,-		D
CADILLAC				PCD: **5-120** Bolt - Mutter: **14x1,50** CB: **67,1**							
CTS (A1LL) sedan rwd	10.13-	18-20	8x18	11	Nitro Demon	30	32	4	2784,-		
			8x18	46	Image Stella	30	32	4	2276,-		
			8x18	47	Image Stella M.Blk	30	32	4	2276,-		
			8x19	11	Nitro Demon	30	32	4	3376,-		
			8,5x19	5	Nitro Volcano G.Gun	30	32	4	4388,-		
			8,5x19	6	Nitro Volcano	30	32	4	4632,-		
			9,5x19	5	Nitro Volcano G.Gun	40	46	12	4388,-	Kun bak	
			9,5x19	6	Nitro Volcano	40	46	12	4632,-	Kun bak	
			8,5x20	5	Nitro Volcano G.Gun	30	32	4	4824,-		
			8,5x20	6	Nitro Volcano	30	32	4	5164,-		
			8,5x20	11	Nitro Demon	30	32	4	3808,-		
			9x20	5	Nitro Volcano G.Gun	32	32	0	4824,-		
			9x20	6	Nitro Volcano	32	32	0	5164,-		
			9x20	15	Nitro Magnum	30	32	4	4572,-		
			9,5x20	5	Nitro Volcano G.Gun	45	46	2	4824,-	Kun bak	
			9,5x20	6	Nitro Volcano	45	46	2	5164,-	Kun bak	
			10,5x20	5	Nitro Volcano G.Gun	42	46	8	4824,-	Kun bak	M
			10,5x20	6	Nitro Volcano	42	46	8	5164,-	Kun bak	M

Bilmerke - Bilmodell	Årsmodell	Dimensjon	Felgdim.	Bilde	Felgmodell	ET Felg	ET Bil	Avvik ET	Veil. Pris eks. MVA	Merknader	B,C D, M
CADILLAC				PCD: **5-120** Bolt - Mutter: **14x1,50** CB: **67,1**							
CT6 (O1SL)	03.16-	19-21	8x18	11	Nitro Demon	30	32	4	2784,-		
CTS (A1LL) sedan awd	10.13-	18-20	8x18	46	Image Stella	30	32	4	2276,-		
			8x18	47	Image Stella M.Blk	30	32	4	2276,-		
			8x19	11	Nitro Demon	30	32	4	3376,-		
			8,5x19	5	Nitro Volcano G.Gun	30	32	4	4388,-		
			8,5x19	6	Nitro Volcano	30	32	4	4632,-		
			8,5x20	5	Nitro Volcano G.Gun	30	32	4	4824,-		
			8,5x20	6	Nitro Volcano	30	32	4	5164,-		
			8,5x20	11	Nitro Demon	30	32	4	3808,-		
			9x20	5	Nitro Volcano G.Gun	32	32	0	4824,-		
			9x20	6	Nitro Volcano	32	32	0	5164,-		
			9x20	15	Nitro Magnum	30	32	4	4572,-		
CADILLAC				PCD: **5-120** Bolt - Mutter: **14x1,50** CB: **67,1**							
CTS (A1LL) V sedan	10.14-	19-20	9x19	3	Nitro Turismo FF	25	23	-4	4660,-		
			9x19	4	Nitro Turismo FF G.Gun/Pol	25	23	-4	4812,-		
			10x19	3	Nitro Turismo FF	40	39	-2	4812,-	Kun bak	
			10x19	4	Nitro Turismo FF G.Gun/Pol	40	39	-2	4964,-	Kun bak	
CADILLAC				PCD: **6-139,7** Bolt - Mutter: **14x1,50** CB: **78,1**							
Escalade	99-12.05	17-26	7,5x17	67	Image Rock	20	33	26	2796,-		
Escalade	01.06-	18-26	7,5x17	68	BM Macho	25	33	16	2756,-		
			7,5x17	69	BM Macho M.Blk	25	33	16	2756,-		
			9x17	74	Ballistic Morax	12	33	42	4020,-		
			7,5x18	67	Image Rock	20	33	26	3324,-		
			8x18	68	BM Macho	20	33	26	3300,-		
			8x18	69	BM Macho M.Blk	20	33	26	3300,-		
			9x18	74	Ballistic Morax	12	33	42	4276,-		
			9x20	68	BM Macho	20	33	26	4288,-		
			9x20	69	BM Macho M.Blk	20	33	26	4288,-		
			9x20	72	Ballistic Dakota	20	33	26	4624,-		D
			9x20	74	Ballistic Morax	12	33	42	4740,-		
			9x22	72	Ballistic Dakota	20	33	26	5128,-		D
CHEVROLET				PCD: **4-114,3** Bolt - Mutter: **12x1,25** CB: **69,1**							
Matiz (KLAK)	06.05-02.09	13-15	6x15	37	Image Comet	40	45	10	1316,-		M
			6x15	38	Image Comet Slv	40	45	10	1316,-		M
CHEVROLET				PCD: **4-100** Bolt - Mutter: **12x1,50** CB: **56,6**							
Spark (KL1M)	01.10-12.15	13-16	5x13	45	Image Ride	38	45	14	1336,-		
			5,5x14	45	Image Ride	38	45	14	1392,-		
			6x15	19	ATS Streetrallye Slv	38	45	14	1960,-		
			6x15	34	CSP 16	39	45	12	1228,-	**OE-fit**	B,D
			6x15	37	Image Comet	39	45	12	1316,-		D
			6x15	42	Image Brio	40	45	10	1304,-		
			6x15	45	Image Ride	38	45	14	1552,-		
			6x16	37	Image Comet	40	45	10	1536,-		
			6x16	38	Image Comet Slv	40	45	10	1536,-		
CHEVROLET				PCD: **4-100** Bolt - Mutter: **12x1,50** CB: **56,6**							
Aveo	02.06-07.11	14-18	6x15	19	ATS Streetrallye Slv	38	45	14	1960,-		
Kalos	09.02-04.08	13-18	6x15	34	CSP 16	39	45	12	1228,-	**OE-fit**	B,D
			6x15	37	Image Comet	39	45	12	1316,-		D
			6x15	42	Image Brio	40	45	10	1304,-		
			6x16	37	Image Comet	40	45	10	1536,-		
			6x16	38	Image Comet Slv	40	45	10	1536,-		
			6,5x16	19	ATS Streetrallye Slv	40	45	10	2240,-		
			6,5x16	34	CSP 16	40	45	10	1468,-		
			6,5x16	42	Image Brio	38	45	14	1524,-		
			7x17	42	Image Brio	40	45	10	1832,-		M
CHEVROLET				PCD: **4-100** Bolt - Mutter: **12x1,50** CB: **56,5**							
Aveo (KL1T) 4-bult	08.11-12.15	15-19	6x15	19	ATS Streetrallye Slv	38	39	2	1960,-		
1.2, 1.3TD (55kW) & 1.4 är 4-bult			6x15	34	CSP 16	39	39	0	1228,-	**OE-fit**	B,D
			6x15	37	Image Comet	39	39	0	1316,-		D
			6x15	42	Image Brio	40	39	-2	1304,-		
			6x15	45	Image Ride	38	39	2	1552,-		
			6x16	37	Image Comet	40	39	-2	1536,-		
			6x16	38	Image Comet Slv	40	39	-2	1536,-		
			6,5x16	19	ATS Streetrallye Slv	40	39	-2	2240,-		
			6,5x16	34	CSP 16	40	39	-2	1468,-		
			6,5x16	42	Image Brio	38	39	2	1524,-		
			7x17	42	Image Brio	40	39	-2	1832,-		
CHEVROLET				PCD: **4-114,3** Bolt - Mutter: **12x1,50** CB: **56,6**							
Epica	07.06-10.11	15-19	6x15	37	Image Comet	40	44	8	1316,-		
Evanda	04.03-06.06	15-18	6x15	38	Image Comet Slv	40	44	8	1316,-		
Lacetti	03.04-03.09	14-18	6x16	37	Image Comet	40	44	8	1536,-		
Nubira	07.03-12.09	14-18									
Rezzo	03.01-12.08	14-18									
Tacuma	03.01-12.08	14-18									
CHEVROLET				PCD: **5-105** Bolt - Mutter: **12x1,50** CB: **56,6**							
Aveo (KL1T) 5-bult	08.11-12.15	15-19	6x15	48	Image Motion	37	39	4	1224,-	**OE-fit**	B,D
1.3TD (71kW) & 1.6 är 5-bult			6,5x16	34	CSP 16	41	39	-4	1468,-	**OE-fit**	B,D
Bolt (EV)	11.16-	17-17	6,5x16	46	Image Stella	41	39	-4	1548,-	**OE-fit**	B,D
Cruze (KL1J)	05.09-12.15	15-20	6,5x16	47	Image Stella M.Blk	41	39	-4	1548,-	**OE-fit**	B,D
1.4 Turbo, 1.6, 1.8			6,5x16	48	Image Motion	38	39	2	1468,-	**OE-fit**	B,D
(bultcirkel 5-105)			6,5x16	50	Image Legend	41	39	-4	1544,-	**OE-fit**	B,D
Cruze (KL1J) sw	06.12-12.15	16-20	7x17	46	Image Stella	41	39	-4	1812,-	**OE-fit**	B,D
1.4 Turbo, 1.6, 1.8			7x17	47	Image Stella M.Blk	41	39	-4	1812,-	**OE-fit**	B,D
(bultcirkel 5-105)			7x17	48	Image Motion	38	39	2	1736,-	**OE-fit**	B,D

Forts. neste side »

Bilmerke - Bilmodell	Årsmodell	Dimensjon	Felgdim.	Bilde	Felgmodell	ET Felg	ET Bil	Avvik ET	Veil. Pris eks. MVA	Merknader	B,C D, M
CHEVROLET (forts.)				PCD: **5-105** Bolt - Mutter: **12x1,50**	CB: **56,6**						
Trax (KL1B)	11.12-12.15	16-20	7,5x17	50	Image Legend	38	39	2	1812,-	**OE-fit**	B,D
Volt	10.15-	17-17	8x18	50	Image Legend	40	39	-2	2276,-	**OE-fit**	B,D
CHEVROLET				PCD: **5-115** Bolt - Mutter: **12x1,50**	CB: **70,3**						
Cruze (KL1J)	05.09-12.15	16-20	7,5x17	46	Image Stella	41	41	0	1812,-	**OE-fit**	B,D
1.7D, 2.0D			7,5x17	47	Image Stella M.Blk	41	41	0	1812,-	**OE-fit**	B,D
(bultcirkel 5-115)			7,5x17	50	Image Legend	40	41	2	1812,-	**OE-fit**	B,D
Cruze (KL1J) sw	06.12-12.15	16-20	8x18	46	Image Stella	41	41	0	2276,-		D
1.7D, 2.0D			8x18	47	Image Stella M.Blk	41	41	0	2276,-		D
(bultcirkel 5-115)			8x18	48	Image Motion	38	41	6	2204,-		D
Orlando (KL1Y)	02.11-12.15	16-20	8x18	49	Image Motion G.Gun	38	41	6	2204,-		D
Volt	01.11-09.15	16-17	8x18	50	Image Legend	42	41	-2	2276,-	**OE-fit**	B,D
CHEVROLET				PCD: **5-115** Bolt - Mutter: **12x1,50**	CB: **70,3**						
Captiva	09.06-12.15	16-20	7,5x17	46	Image Stella	41	46	10	1812,-		D
			7,5x17	47	Image Stella M.Blk	41	46	10	1812,-		D
			7,5x17	50	Image Legend	40	46	12	1812,-		D
			8x18	46	Image Stella	41	46	10	2276,-		D
			8x18	47	Image Stella M.Blk	41	46	10	2276,-		D
			8x18	50	Image Legend	42	46	8	2276,-	**OE-fit**	B,D
CHEVROLET				PCD: **5-100** Bolt - Mutter: **12x1,50**	CB: **57,1**						
Beretta fwd	89-96	14-17	6x15	48	Image Motion	40	42	4	1224,-		
Cavalier	82-05	14-17	6,5x16	36	Image Colt	40	42	4	1624,-		
Corsica fwd	89-96	14-17	6,5x16	92	Image Colt L.Gun	40	42	4	1548,-		
CHEVROLET				PCD: **5-115** Bolt - Mutter: **12x1,50**	CB: **70,3**						
Alero	01.98-12.01	15-18	6,5x16	36	Image Colt	35	43	16	1624,-		
Celebrity	82-90	15-18	6,5x16	92	Image Colt L.Gun	35	43	16	1548,-		
Impala	01-12	16-20	7,5x17	36	Image Colt	35	43	16	1956,-		
SS 04- 17"			7,5x17	46	Image Stella	41	43	4	1812,-		D
Lumina	90-99	15-18	7,5x17	47	Image Stella M.Blk	41	43	4	1812,-		D
Malibu	97-03	15-18	7,5x17	50	Image Legend	40	43	6	1812,-		D
Monte Carlo	95-01	15-18	7,5x17	92	Image Colt L.Gun	35	43	16	1876,-		
Monte Carlo	01-06.07	16-20	8x18	7	Nitro Spark G.Blk/Grey	35	43	16	3476,-		
(orig. Et 52)			8x18	8	Nitro Spark G.Blk/Red	35	43	16	3476,-		
			8x18	46	Image Stella	41	43	4	2276,-		D
			8x18	47	Image Stella M.Blk	41	43	4	2276,-		D
			8x18	48	Image Motion	38	43	10	2204,-		D
			8x18	49	Image Motion G.Gun	38	43	10	2204,-		D
			8x18	50	Image Legend	42	43	2	2276,-		D
CHEVROLET				PCD: **5-110** Bolt - Mutter: **12x1,50**	CB: **65,1**						
HHR	01.05-05.11	16-20	6,5x16	36	Image Colt	40	40	0	1624,-		D
Malibu	01.04-10.11	16-20	6,5x16	48	Image Motion	40	40	0	1468,-		D
Malibu Maxx	01.04-12.07	16-20	6,5x16	92	Image Colt L.Gun	40	40	0	1548,-		D
			7x17	48	Image Motion	40	40	0	1736,-	**OE-fit**	B,D
			7,5x17	36	Image Colt	40	40	0	1956,-		D
			7,5x17	92	Image Colt L.Gun	40	40	0	1876,-		D
			8x17	48	Image Motion	34	40	12	1736,-		D
			8x18	36	Image Colt	40	40	0	2412,-		D
			8x18	48	Image Motion	34	40	12	2204,-		D
			8x18	92	Image Colt L.Gun	40	40	0	2296,-		D
CHEVROLET				PCD: **5-120** Bolt - Mutter: **14x1,50**	CB: **67,1**						
Camaro	01.09-12.15	17-22	8x18	11	Nitro Demon	30	35	10	2784,-		
Camaro	01.16-	18-22	8x18	46	Image Stella	30	35	10	2276,-		
			8x18	47	Image Stella M.Blk	30	35	10	2276,-		
			8x19	11	Nitro Demon	30	35	10	3376,-		
			8,5x19	5	Nitro Volcano G.Gun	30	35	10	4388,-		
			8,5x19	6	Nitro Volcano	30	35	10	4632,-		
			9,5x19	5	Nitro Volcano G.Gun	40	40	0	4388,-	Kun bak	
			9,5x19	6	Nitro Volcano	40	40	0	4632,-	Kun bak	
			8,5x20	5	Nitro Volcano G.Gun	30	35	10	4824,-		
			8,5x20	6	Nitro Volcano	30	35	10	5164,-		
			8,5x20	11	Nitro Demon	30	35	10	3808,-		
			9x20	5	Nitro Volcano G.Gun	32	35	6	4824,-		
			9x20	6	Nitro Volcano	32	35	6	5164,-		
			10,5x20	5	Nitro Volcano G.Gun	42	40	-4	4824,-	Kun bak	
			10,5x20	6	Nitro Volcano	42	40	-4	5164,-	Kun bak	
			9x21	5	Nitro Volcano G.Gun	32	35	6	5540,-		
			9x21	6	Nitro Volcano	32	35	6	5996,-		
			10,5x21	5	Nitro Volcano G.Gun	42	40	-4	5540,-	Kun bak	
			10,5x21	6	Nitro Volcano	42	40	-4	5996,-	Kun bak	
CHEVROLET				PCD: **5-120** Bolt - Mutter: **14x1,50**	CB: **67,1**						
Camaro SS	01.09-12.15	19-22	9x20	5	Nitro Volcano G.Gun	32	35	6	4824,-		
			9x20	6	Nitro Volcano	32	35	6	5164,-		
			9x21	5	Nitro Volcano G.Gun	32	35	6	5540,-		
			9x21	6	Nitro Volcano	32	35	6	5996,-		
CHEVROLET				PCD: **5-115** Bolt - Mutter: **12x1,50**	CB: **70,3**						
Equinox	12.04-06.09	16-19	7,5x17	46	Image Stella	41	41	0	1812,-		D
			7,5x17	47	Image Stella M.Blk	41	41	0	1812,-		D
CHEVROLET				PCD: **6-139,7** Bolt - Mutter: **12x1,50**	CB: **99,5**						
Colorado	01.09-12.12	16-20	6x15	65	CSP Work	27	33	12	2196,-		
Z71 17"			7x16	68	BM Macho	25	33	16	2396,-		
Colorado 2wd	01.05-12.12	15-20	7x16	69	BM Macho M.Blk	25	33	16	2396,-		
Colorado 4wd	01.05-12.12	15-20	7,5x17	67	Image Rock	20	33	26	2796,-		
			7,5x17	68	BM Macho	25	33	16	2756,-		
			7,5x17	69	BM Macho M.Blk	25	33	16	2756,-		
			7,5x18	67	Image Rock	20	33	26	3324,-		

Forts. neste side »

Bilmerke - Bilmodell	Årsmodell	Dimensjon	Felgdim.	Bilde	Felgmodell	ET Felg	ET Bil	Avvik ET	Veil. Pris eks. MVA	Merknader	B,C D, M
CHEVROLET (forts.)			PCD: **6-139,7** Bolt - Mutter: **12x1,50** CB: **99,5**								
			8x18	68	BM Macho	20	33	26	3300,-		
			8x18	69	BM Macho M.Blk	20	33	26	3300,-		
			9x20	69	BM Macho M.Blk	20	33	26	4288,-		
CHEVROLET			PCD: **6-139,7** Bolt - Mutter: **14x1,50** CB: **78,1**								
Astro 4wd	03-	16-22	7x16	68	BM Macho	25	31	12	2396,-		
Avalanche	06.01-	17-26	7x16	69	BM Macho M.Blk	25	31	12	2396,-		
K-1500 4wd	88-	16-26	8x16	78	Advanti Peak	5	31	52	2692,-		
K-2500 4wd	88-11.10	16-26	7,5x17	67	Image Rock	20	31	22	2796,-		
Silverado	99-05	16-26	7,5x17	68	BM Macho	25	31	12	2756,-		
Silverado	06-11.10	17-26	7,5x17	69	BM Macho M.Blk	25	31	12	2756,-		
Silverado 1500	12.10-	17-26	9x17	74	Ballistic Morax	12	31	38	4020,-		
Suburban 1500	12.10-	17-26	7,5x18	67	Image Rock	20	31	22	3324,-		
Suburban 4wd	92-05	16-26	8x18	68	BM Macho	20	31	22	3300,-		
Suburban 4wd	06-11.10	17-26	8x18	69	BM Macho M.Blk	20	31	22	3300,-		
Tahoe	96-05	16-26	9x18	74	Ballistic Morax	12	31	38	4276,-		
Tahoe	06-	17-26	9x20	68	BM Macho	20	31	22	4288,-		
			9x20	69	BM Macho M.Blk	20	31	22	4288,-		
			9x20	72	Ballistic Dakota	20	31	22	4624,-		D
			9x20	74	Ballistic Morax	12	31	38	4740,-		
			9x22	72	Ballistic Dakota	20	31	22	5128,-		D
CHEVROLET			PCD: **8-165** Bolt - Mutter: **14x1,50** CB: **117,0**								
8-bult	60-	16-24	9x17	74	Ballistic Morax	12	14	4	4020,-		M
(60-91 mutter 9/16DX)			9x18	74	Ballistic Morax	12	14	4	4276,-		M
Suburban	-11.10	16-24	9x20	74	Ballistic Morax	12	14	4	4740,-		M
Vans & Pick-ups K-3500	-10.11	16-24									
CHEVROLET			PCD: **8-180** Bolt - Mutter: **14x1,50** CB: **124,0**								
Silverado 2500	12.10-	17-26	9x18	74	Ballistic Morax	12	0	-24	4276,-		
Silverado 3500	12.10-	17-26	9x20	74	Ballistic Morax	12	0	-24	4740,-		
Suburban 2500	12.10-	17-26									
Suburban 3500	12.10-	17-26									
CHRYSLER			PCD: **5-100** Bolt - Mutter: **12x1,50** CB: **57,1**								
Le Baron	01.87-12.95	14-18	6x15	48	Image Motion	40	40	0	1224,-		
Neon	09.93-01.04	14-18	6,5x16	29	CSP 13	35	40	10	1716,-		D
PT Cruiser	06.00-07.10	15-20	6,5x16	30	CSP 13 M.Gun	35	40	10	1716,-		D
Sebring	95-05.07	15-20	6,5x16	36	Image Colt	40	40	0	1624,-		
Stratus	01.95-12.00	15-19	6,5x16	48	Image Motion	38	40	4	1468,-		D
Voyager	-91	14-18	6,5x16	49	Image Motion G.Gun	38	40	4	1468,-		D
			6,5x16	92	Image Colt L.Gun	40	40	0	1548,-		
			7x17	29	CSP 13	35	40	10	2152,-		D
			7x17	30	CSP 13 M.Gun	35	40	10	2152,-		D
CHRYSLER			PCD: **5-114,3** Bolt - Mutter: **12x1,50** CB: **67,1**								
200	01.11-	17-20	6,5x16	36	Image Colt	35	40	10	1624,-		
Sebring	06.07-12.10	16-20	6,5x16	92	Image Colt L.Gun	35	40	10	1548,-		
			7,5x17	9	Nitro Sabre G.Blk	35	40	10	3052,-		
			7,5x17	36	Image Colt	35	40	10	1956,-		
			7,5x17	92	Image Colt L.Gun	35	40	10	1876,-		
			7,5x18	2	Nitro Sapphire FF	35	40	10	3944,-		
			8x18	7	Nitro Spark G.Blk/Grey	35	40	10	3476,-		
			8x18	8	Nitro Spark G.Blk/Red	35	40	10	3476,-		
			8x18	9	Nitro Sabre G.Blk	35	40	10	3496,-		
			8x18	16	Advanti Inizio DST	35	40	10	3828,-		
			8x18	36	Image Colt	35	40	10	2412,-		
			8x18	92	Image Colt L.Gun	35	40	10	2296,-		
			7,5x19	2	Nitro Sapphire FF	35	40	10	4572,-		
			8x19	11	Nitro Demon	38	40	4	3376,-		
			8x19	16	Advanti Inizio DST	35	40	10	4412,-		
			8,5x19	5	Nitro Volcano G.Gun	35	40	10	4388,-		M
			8,5x19	6	Nitro Volcano	35	40	10	4632,-		M
			8,5x19	9	Nitro Sabre G.Blk	35	40	10	4292,-		
			8,5x19	36	Image Colt	35	40	10	3028,-		M
			8,5x19	92	Image Colt L.Gun	35	40	10	2876,-		M
			8x20	2	Nitro Sapphire FF	35	40	10	5096,-		
			8,5x20	1	Nitro Throne FF	40	40	0	5060,-		M
			8,5x20	5	Nitro Volcano G.Gun	35	40	10	4824,-		M
			8,5x20	6	Nitro Volcano	35	40	10	5164,-		M
			8,5x20	7	Nitro Spark G.Blk/Grey	35	40	10	4660,-		
			8,5x20	8	Nitro Spark G.Blk/Red	35	40	10	4660,-		
			8,5x20	9	Nitro Sabre G.Blk	35	40	10	4800,-		
			8,5x20	11	Nitro Demon	38	40	4	3808,-		
			8,5x20	36	Image Colt	35	40	10	3432,-		M
			8,5x20	92	Image Colt L.Gun	35	40	10	3276,-		M
CHRYSLER			PCD: **5-115** Bolt - Mutter: **14x1,50** CB: **71,5**								
300C kombi awd	01.05-09.11	18-22	8x18	7	Nitro Spark G.Blk/Grey	35	55	40	3476,-		
300C sedan awd	01.04-09.11	18-22	8x18	8	Nitro Spark G.Blk/Red	35	55	40	3476,-		
			8x19	11	Nitro Demon	38	55	34	3376,-		
			8,5x20	7	Nitro Spark G.Blk/Grey	35	55	40	4660,-		
			8,5x20	8	Nitro Spark G.Blk/Red	35	55	40	4660,-		
			8,5x20	11	Nitro Demon	38	55	34	3808,-		
CHRYSLER			PCD: **5-114,3** Bolt - Mutter: **12x1,50** CB: **71,5**								
300M	01.98-06.04	16-20	6,5x16	36	Image Colt	35	40	10	1624,-		
Caravan	91-01	15-19	6,5x16	92	Image Colt L.Gun	35	40	10	1548,-		
New Yorker	95-02	15-19	7,5x17	9	Nitro Sabre G.Blk	35	40	10	3052,-		
Town & Country	03.01-11.07	16-20	7,5x17	36	Image Colt	35	40	10	1956,-		
Vision	93-99	15-19	7,5x17	92	Image Colt L.Gun	35	40	10	1876,-		

Forts. neste side »

Bilmerke - Bilmodell	Årsmodell	Dimensjon	Felgdim.	Bilde	Felgmodell	ET Felg	ET Bil	Avvik ET	Veil. Pris eks. MVA	Merknader	B,C D, M
CHRYSLER (forts.)				PCD: **5-114,3** Bolt - Mutter: **12x1,50** CB: **71,5**							
Voyager	02.91-02.01	15-19	7,5x18	2	Nitro Sapphire FF	35	40	10	3944,-		
Voyager	03.01-01.04	16-20	8x18	7	Nitro Spark G.Blk/Grey	35	40	10	3476,-		
Voyager	02.04-11.07	16-20	8x18	8	Nitro Spark G.Blk/Red	35	40	10	3476,-		
			8x18	9	Nitro Sabre G.Blk	35	40	10	3496,-		
			8x18	16	Advanti Inizio DST	35	40	10	3828,-		
			8x18	36	Image Colt	35	40	10	2412,-		
			8x18	92	Image Colt L.Gun	35	40	10	2296,-		
			7,5x19	2	Nitro Sapphire FF	35	40	10	4572,-		
			8x19	11	Nitro Demon	38	40	4	3376,-		
			8x19	16	Advanti Inizio DST	35	40	10	4412,-		
			8,5x19	5	Nitro Volcano G.Gun	35	40	10	4388,-		M
			8,5x19	6	Nitro Volcano	35	40	10	4632,-		M
			8,5x19	9	Nitro Sabre G.Blk	35	40	10	4292,-		
			8,5x19	36	Image Colt	35	40	10	3028,-		M
			8,5x19	92	Image Colt L.Gun	35	40	10	2876,-		M
			8x20	2	Nitro Sapphire FF	35	40	10	5096,-		
			8,5x20	1	Nitro Throne FF	40	40	0	5060,-		M
			8,5x20	5	Nitro Volcano G.Gun	35	40	10	4824,-		M
			8,5x20	6	Nitro Volcano	35	40	10	5164,-		M
			8,5x20	7	Nitro Spark G.Blk/Grey	35	40	10	4660,-		
			8,5x20	8	Nitro Spark G.Blk/Red	35	40	10	4660,-		
			8,5x20	9	Nitro Sabre G.Blk	35	40	10	4800,-		
			8,5x20	11	Nitro Demon	38	40	4	3808,-		
			8,5x20	36	Image Colt	35	40	10	3432,-		M
			8,5x20	92	Image Colt L.Gun	35	40	10	3276,-		M
CHRYSLER				PCD: **5-127** Bolt - Mutter: **12x1,50** CB: **71,5**							
Grand Voyager	12.07-	16-22	7x16	65	CSP Work	40	40	0	2556,-		D
4.0 17"			8x18	68	BM Macho	40	40	0	3300,-		D
Town & Country	12.07-	16-22	8x18	69	BM Macho M.Blk	40	40	0	3300,-		D
(Kun biler med 16" orig.			9x20	12	Nitro Edge M.Blk	40	40	0	4220,-		D,M
kan ha 16", andre 17")			9x22	12	Nitro Edge M.Blk	40	40	0	4888,-		D,M
Voyager	01.07-	16-22									
4.0 17"											
CHRYSLER				PCD: **5-127** Bolt - Mutter: **1/2"** CB: **71,5**							
Pacifica	03.03-11.07	17-22	8x18	68	BM Macho	40	51	22	3300,-		D
Pacifica	03.16-	17-22	8x18	69	BM Macho M.Blk	40	51	22	3300,-		D
CITROEN				PCD: **4-100** Bolt - Mutter: **12x1,50B** CB: **54,1**							
C1 (P)	07.05-06.14	14-17	5x14	34	CSP 16	35	39	8	1176,-		D
			5x14	35	CSP 16 M.Gun	35	39	8	1176,-		D
			5x14	37	Image Comet	35	39	8	1264,-		D
			5x15	37	Image Comet	35	39	8	1316,-		D
			5x15	38	Image Comet Slv	35	39	8	1316,-		D
			5,5x15	34	CSP 16	36	39	6	1228,-		D
			6x15	19	ATS Streetrallye Slv	38	39	2	1960,-		
			6x15	42	Image Brio	40	39	-2	1304,-		
			6x15	45	Image Ride	38	39	2	1552,-		
			6x16	37	Image Comet	40	39	-2	1536,-		
			6x16	38	Image Comet Slv	40	39	-2	1536,-		
CITROEN				PCD: **4-100** Bolt - Mutter: **12x1,50B** CB: **54,1**							
C1 (P)	07.14-	14-17	5x14	34	CSP 16	35	35	0	1176,-		D
			5x14	35	CSP 16 M.Gun	35	35	0	1176,-		D
			5x14	37	Image Comet	35	35	0	1264,-		D
			5x15	37	Image Comet	35	35	0	1316,-		D
			5x15	38	Image Comet Slv	35	35	0	1316,-		D
			5,5x15	34	CSP 16	36	35	-2	1228,-		D
			6x15	19	ATS Streetrallye Slv	38	35	-6	1960,-		
			6x15	42	Image Brio	40	35	-10	1304,-		
			6x16	37	Image Comet	40	35	-10	1536,-		
			6x16	38	Image Comet Slv	40	35	-10	1536,-		
CITROEN				PCD: **4-108** Bolt - Mutter: **12x1,25B** CB: **65,1**							
Berlingo (7)	05.08-05.18	15-20	5,5x14	38	Image Comet Slv	24	27	6	1264,-	**OE-fit**	B,D
C2	11.03-03.10	14-18	6x15	19	ATS Streetrallye Slv	23	27	8	1960,-		D
C3	04.02-01.10	14-18	6x15	37	Image Comet	23	27	8	1316,-	**OE-fit**	B,D
1.6, 1.6HDi (80kW) 15"			6x15	38	Image Comet Slv	23	27	8	1316,-	**OE-fit**	B,D
C3 (2) Aircross	09.17-	15-19	6,5x15	42	Image Brio	20	27	14	1304,-		D
1.2 (81kW/96kW) 16"			6x16	19	ATS Streetrallye Slv	23	27	8	2240,-		D
1.6HDi 16"			6x16	37	Image Comet	23	27	8	1536,-	**OE-fit**	B,D
C3 (H) Pluriel	06.03-02.10	15-19	6,5x16	19	ATS Streetrallye Slv	20	27	14	2240,-		D
C3 (S)	02.10-10.16	15-19	6,5x16	42	Image Brio	20	27	14	1524,-		D
C3 (S)	11.16-	15-19	7x17	18	ATS Streetrallye Blk	25	27	4	3344,-		D
C4	10.04-01.11	15-20	7x17	42	Image Brio	18	27	18	1832,-		D
2.0i, HDi 110, HDi 135 16"			7,5x18	18	ATS Streetrallye Blk	22	27	10	4180,-		D
C4 (N)	02.11-	16-20									
C4 (U) Grand Picasso	11.06-08.13	15-19									
2.0i, HDi 110, HDi 135 16"											
C4 (U) Picasso	10.06-05.13	15-20									
2.0i, HDi 110, HDi 135 16"											
DS3 (S)	03.10-	15-19									
1.6 Turbo (115kW) 16"											
Racing (152kW) 17"											
DS4 (N)	06.11-	16-20									
1.6 Turbo (147kW) 17"											
DS4 (N) Crossback	06.16-	16-20									
2.0HDi (133kW) 17"											

Bilmerke - Bilmodell	Årsmodell	Dimensjon	Felgdim.	Bilde	Felgmodell	ET Felg	ET Bil	Avvik ET	Veil. Pris eks. MVA	Merknader	B,C D, M
CITROEN				PCD: **4-108** Bolt - Mutter: **12x1,25B**		CB: **65,1**					
DS3 (U) Crossback	12.18-	16-19	6x16	37	Image Comet	35	32	-6	1536,-	**OE-fit**	B,D
E-tense 17"			6x16	38	Image Comet Slv	35	32	-6	1536,-	**OE-fit**	B,D
DS5 (K)	03.12-05.18	16-20	6,5x16	42	Image Brio	38	32	-12	1524,-		D
1.6 Turbo (115kW & 147kW) 17"			7x17	18	ATS Streetrallye Blk	25	32	14	3344,-		D
2.0HDi, Hybrid4 17"			7x17	42	Image Brio	38	32	-12	1832,-		D
			7,5x18	18	ATS Streetrallye Blk	22	32	20	4180,-		D
CITROEN				PCD: **4-108** Bolt - Mutter: **12x1,25B**		CB: **65,1**					
Berlingo	09.96-04.08	14-18	5,5x14	38	Image Comet Slv	24	18	-12	1264,-	**OE-fit**	B,D
1.6i (80kW) 03.03- 15"			6x15	37	Image Comet	23	18	-10	1316,-	**OE-fit**	B,D
2.0HDi (66kW) 03.03- 15"			6x15	38	Image Comet Slv	23	18	-10	1316,-	**OE-fit**	B,D
Berlingo First	05.08-12.09	14-19	6,5x15	42	Image Brio	20	18	-4	1304,-		D
C3 (SH) Picasso	05.09-08.17	15-19	6x16	37	Image Comet	23	18	-10	1536,-	**OE-fit**	B,D
1.6HDi (68kW), 1.6 (88kW) 16"			6,5x16	19	ATS Streetrallye Slv	20	18	-4	2240,-		D
C4 (0) cactus	09.14-	15-19	6,5x16	42	Image Brio	20	18	-4	1524,-		D
1.2 (96kW) 16"			7x17	42	Image Brio	18	18	0	1832,-		D
C5	03.01-09.04	15-19									
C5 II	10.04-03.08	16-20									
Xantia	09.93-02.01	14-18									
Xsara	09.97-10.00	14-18									
Xsara	11.00-09.04	15-18									
Xsara Picasso	02.00-09.06	15-18									
CITROEN				PCD: **5-108** Bolt - Mutter: **12x1,25B**		CB: **65,1**					
C4 (3) Grand Picasso	09.13-12.17	16-20	6,5x16	36	Image Colt	40	47	14	1624,-		D
2,0HDi 17"			6,5x16	92	Image Colt L.Gun	40	47	14	1548,-		D
C4 (3) Grand Space Tourer	01.18-	16-20	7x16	17	BM Drive M.Gun	40	47	14	1476,-		D
2.0HDi 17"			7x16	40	Image Spirit	40	47	14	1264,-		D
C4 (3) Picasso	06.13-12.17	16-20	7x16	46	Image Stella	40	47	14	1548,-		D
2,0HDi 17"			7x16	47	Image Stella M.Blk	40	47	14	1548,-		D
C4 (3) Space Tourer	01.18-	16-20	7x16	48	Image Motion	40	47	14	1468,-		D
2.0HDi (120kW) 17"			7x16	49	Image Motion G.Gun	40	47	14	1468,-		D
C5 (A) Aircross	02.19-	17-20	7x16	50	Image Legend	40	47	14	1544,-		D
DS7 (J) Crossback	02.18-	17-21	7x17	40	Image Spirit	42	47	10	1476,-		D
1.6 Turbo 18"			7x17	46	Image Stella	42	47	10	1812,-		D
Hybrid e-Tense 19"			7x17	47	Image Stella M.Blk	42	47	10	1812,-		D
			7,5x17	36	Image Colt	40	47	14	1956,-		D
			7,5x17	50	Image Legend	40	47	14	1812,-		D
			7,5x17	92	Image Colt L.Gun	40	47	14	1876,-		D
			8x17	17	BM Drive M.Gun	45	47	4	1736,-		D
			8x17	48	Image Motion	45	47	4	1736,-		D
			8x18	17	BM Drive M.Gun	45	47	4	2296,-		D
			8x18	36	Image Colt	42	47	10	2412,-		D
			8x18	48	Image Motion	45	47	4	2204,-		D
			8x18	53	Nitro Hammer	42	47	10	3256,-		D
			8x18	92	Image Colt L.Gun	42	47	10	2296,-		D
			8x19	48	Image Motion	45	47	4	2532,-		D
			8,5x19	36	Image Colt	42	47	10	3028,-		D,M
			8,5x19	92	Image Colt L.Gun	42	47	10	2876,-		D,M
			8,5x20	36	Image Colt	42	47	10	3432,-		D,M
			8,5x20	53	Nitro Hammer	42	47	10	4268,-		D,M
			8,5x20	92	Image Colt L.Gun	42	47	10	3276,-		D,M
CITROEN				PCD: **5-114,3** Bolt - Mutter: **12x1,50**		CB: **67,1**					
C4 (B) Aircross	04.12-	16-21	6,5x16	34	CSP 16	38	38	0	1468,-	**OE-fit**, OE-mutter styrning/bricka	B,D
C-crosser (V)	07.07-03.12	16-20	6,5x16	36	Image Colt	35	38	6	1624,-		
			6,5x16	48	Image Motion	38	38	0	1468,-	**OE-fit**, OE-mutter styrning/bricka	B,D
			6,5x16	92	Image Colt L.Gun	35	38	6	1548,-		
			7x17	34	CSP 16	38	38	0	1836,-	**OE-fit**, OE-mutter styrning/bricka	B,D
			7x17	40	Image Spirit	38	38	0	1476,-	**OE-fit**	B,D
			7x17	46	Image Stella	38	38	0	1812,-	**OE-fit**	B,D
			7x17	47	Image Stella M.Blk	38	38	0	1812,-	**OE-fit**	B,D
			7x17	48	Image Motion	38	38	0	1736,-	**OE-fit**, OE-mutter styrning/bricka	B,D
			7,5x17	9	Nitro Sabre G.Blk	35	38	6	3052,-		
			7,5x17	36	Image Colt	35	38	6	1956,-		
			7,5x17	92	Image Colt L.Gun	35	38	6	1876,-		
			7,5x18	2	Nitro Sapphire FF	35	38	6	3944,-		
			7,5x18	34	CSP 16	38	38	0	2444,-	**OE-fit**, OE-mutter styrning/bricka	B,D
			7,5x18	46	Image Stella	38	38	0	2276,-	**OE-fit**	B,D
			7,5x18	47	Image Stella M.Blk	38	38	0	2276,-	**OE-fit**	B,D
			8x18	7	Nitro Spark G.Blk/Grey	35	38	6	3476,-		
			8x18	8	Nitro Spark G.Blk/Red	35	38	6	3476,-		
			8x18	9	Nitro Sabre G.Blk	35	38	6	3496,-		
			8x18	16	Advanti Inizio DST	35	38	6	3828,-		
			8x18	36	Image Colt	35	38	6	2412,-		
			8x18	92	Image Colt L.Gun	35	38	6	2296,-		
			7,5x19	2	Nitro Sapphire FF	35	38	6	4572,-		
			8x19	11	Nitro Demon	38	38	0	3376,-		
			8x19	16	Advanti Inizio DST	35	38	6	4412,-		
			8,5x19	5	Nitro Volcano G.Gun	35	38	6	4388,-		
			8,5x19	6	Nitro Volcano	35	38	6	4632,-		
			8,5x19	9	Nitro Sabre G.Blk	35	38	6	4292,-		M
			8,5x19	36	Image Colt	35	38	6	3028,-		M
			8,5x19	92	Image Colt L.Gun	35	38	6	2876,-		M
			8x20	2	Nitro Sapphire FF	35	38	6	5096,-		
			8,5x20	1	Nitro Throne FF	40	38	-4	5060,-		M
			8,5x20	5	Nitro Volcano G.Gun	35	38	6	4824,-		
			8,5x20	6	Nitro Volcano	35	38	6	5164,-		

Forts. neste side »

Bilmerke - Bilmodell	Årsmodell	Dimensjon	Felgdim.	Bilde	Felgmodell	ET Felg	ET Bil	Avvik ET	Veil. Pris eks. MVA	Merknader	B,C D, M
CITROEN (forts.)				PCD: **5-114,3** Bolt - Mutter: **12x1,50** CB: **67,1**							
			8,5x20	7	Nitro Spark G.Blk/Grey	35	38	6	4660,-		M
			8,5x20	8	Nitro Spark G.Blk/Red	35	38	6	4660,-		M
			8,5x20	9	Nitro Sabre G.Blk	35	38	6	4800,-		M
			8,5x20	11	Nitro Demon	38	38	0	3808,-		
			8,5x20	36	Image Colt	35	38	6	3432,-		M
			8,5x20	92	Image Colt L.Gun	35	38	6	3276,-		M
			9x21	5	Nitro Volcano G.Gun	35	38	6	5540,-		M
			9x21	6	Nitro Volcano	35	38	6	5996,-		M
CITROEN				PCD: **4-98** Bolt - Mutter: **12x1,25B** CB: **58,1**							
Nemo (225)	01.08-	14-18	5,5x14	37	Image Comet	35	44	18	1264,-	**OE-fit**	B,D
Nemo (A) kombi	07.08-	15-18	5,5x14	38	Image Comet Slv	35	44	18	1264,-	**OE-fit**	B,D
			5,5x14	45	Image Ride	38	44	12	1392,-	Eksenterbolter	
			6x15	19	ATS Streetrallye Slv	35	44	18	1960,-		D
			6x15	34	CSP 16	40	44	8	1228,-	**OE-fit**	B,D
			6x15	37	Image Comet	40	44	8	1316,-	**OE-fit**	B,D
			6x15	38	Image Comet Slv	40	44	8	1316,-	**OE-fit**	B,D
			6x15	45	Image Ride	38	44	12	1552,-	Eksenterbolter	
			6x16	37	Image Comet	40	44	8	1536,-	**OE-fit**	B,D
			6x16	38	Image Comet Slv	40	44	8	1536,-	**OE-fit**	B,D
			6,5x16	19	ATS Streetrallye Slv	35	44	18	2240,-		D
CITROEN				PCD: **5-108** Bolt - Mutter: **12x1,25B** CB: **65,1**							
Berlingo (E)	06.18-	15-20	6x15	17	BM Drive M.Gun	40	47	14	1276,-		D
1.2, 1.5HDI (75, 81, 96kW) 16"			6x15	48	Image Motion	40	47	14	1224,-		D
			6x15	49	Image Motion G.Gun	40	47	14	1224,-		D
			6,5x16	36	Image Colt	40	47	14	1624,-	Maks bel. 700 kg	D
			6,5x16	48	Image Motion	47	47	0	1468,-	**OE-fit**, maks bel. 700 kg	B,D
			6,5x16	54	Image Vector	46	47	2	1956,-	**OE-fit**, maks bel. 900 kg	B,D
			6,5x16	55	Image Vector Slv	46	47	2	1956,-	**OE-fit**	B,D
			6,5x16	92	Image Colt L.Gun	40	47	14	1548,-	Maks bel. 700 kg	D
			7x16	17	BM Drive M.Gun	40	47	14	1476,-		D
			7x16	46	Image Stella	40	47	14	1548,-	Maks bel. 690 kg	D
			7x16	47	Image Stella M.Blk	40	47	14	1548,-	Maks bel. 690 kg	D
			7x16	49	Image Motion G.Gun	40	47	14	1468,-		D
			7x16	50	Image Legend	40	47	14	1544,-		D
			7x17	46	Image Stella	42	47	10	1812,-	Maks bel. 690 kg	D
			7x17	47	Image Stella M.Blk	42	47	10	1812,-	Maks bel. 690 kg	D
			7x17	54	Image Vector	46	47	2	2576,-	**OE-fit**	B,D
			7x17	55	Image Vector Slv	46	47	2	2576,-	**OE-fit**	B,D
			7,5x17	36	Image Colt	40	47	14	1956,-	Maks bel. 750 kg	D
			7,5x17	50	Image Legend	40	47	14	1812,-		D
			7,5x17	92	Image Colt L.Gun	40	47	14	1876,-	Maks bel. 750 kg	D
			8x17	17	BM Drive M.Gun	45	47	4	1736,-		D
			8x17	48	Image Motion	45	47	4	1736,-		D
			8x18	7	Nitro Spark G.Blk/Grey	45	47	4	3476,-	Maks bel. 750 kg	D
			8x18	8	Nitro Spark G.Blk/Red	45	47	4	3476,-	Maks bel. 750 kg	D
			8x18	11	Nitro Demon	40	47	14	2784,-		D
			8x18	17	BM Drive M.Gun	45	47	4	2296,-		D
			8x18	36	Image Colt	42	47	10	2412,-	Maks bel. 750 kg	D
			8x18	48	Image Motion	45	47	4	2204,-		D
			8x18	53	Nitro Hammer	42	47	10	3256,-		D
			8x18	92	Image Colt L.Gun	42	47	10	2296,-	Maks bel. 750 kg	D
			8x19	11	Nitro Demon	40	47	14	3376,-		D
			8x19	48	Image Motion	45	47	4	2532,-		D
			8,5x19	36	Image Colt	42	47	10	3028,-	Maks bel. 750 kg	D,M
			8,5x19	92	Image Colt L.Gun	42	47	10	2876,-	Maks bel. 750 kg	D,M
			8,5x20	7	Nitro Spark G.Blk/Grey	45	47	4	4660,-	Maks bel. 750 kg	D
			8,5x20	8	Nitro Spark G.Blk/Red	45	47	4	4660,-	Maks bel. 750 kg	D
			8,5x20	11	Nitro Demon	45	47	4	3808,-		D
			8,5x20	36	Image Colt	42	47	10	3432,-	Maks bel. 750 kg	D,M
			8,5x20	53	Nitro Hammer	42	47	10	4268,-		D
			8,5x20	92	Image Colt L.Gun	42	47	10	3276,-	Maks bel. 750 kg	D,M
CITROEN				PCD: **5-108** Bolt - Mutter: **12x1,25B** CB: **65,1**							
Jumpy II	01.06-05.16	15-19	8x18	53	Nitro Hammer	42	42	0	3256,-		D
2.0HDi 16"			8,5x20	53	Nitro Hammer	42	42	0	4268,-	Maks bel. 880 kg	D,M
CITROEN				PCD: **5-108** Bolt - Mutter: **12x1,25B** CB: **65,1**							
Jumpy (V)	06.16-	16-20	6,5x16	54	Image Vector	46	46	0	1956,-	**OE-fit**, maks bel. 900 kg	B,D
Spacetourer (V)	06.16-	16-20	6,5x16	55	Image Vector Slv	46	46	0	1956,-	**OE-fit**	B,D
			7x17	54	Image Vector	46	46	0	2576,-	**OE-fit**	B,D
			7x17	55	Image Vector Slv	46	46	0	2576,-	**OE-fit**	B,D
			8x18	53	Nitro Hammer	42	46	8	3256,-		D
			8,5x20	53	Nitro Hammer	42	46	8	4268,-	Maks bel. 880 kg	D
CITROEN				PCD: **5-118** Bolt - Mutter: **14x1,50B** CB: **71,1**							
Jumper (small chassis)	03.94-05.06	15-18	6x15	58	Image Strong	62	68	12	2116,-		D
Jumper (small chassis)	06.06-	15-18	6x15	59	Image Strong M.Gun	62	68	12	2116,-		D
			6,5x16	58	Image Strong	62	68	12	2500,-		D
			6,5x16	59	Image Strong M.Gun	62	68	12	2500,-		D
			6,5x16	61	Image Solid	68	68	0	2552,-	Maks bel. 1400 kg	D
			6,5x17	58	Image Strong	62	68	12	2884,-		D
			6,5x17	59	Image Strong M.Gun	62	68	12	2884,-		D

Bilmerke - Bilmodell	Årsmodell	Dimensjon	Felgdim.	Bilde	Felgmodell	ET Felg	ET Bil	Avvik ET	Veil. Pris eks. MVA	Merknader	B,C D, M
CITROEN			PCD: **5-130** Bolt - Mutter: **16x1,50B** CB: **78,1**								
Jumper (large chassis)	03.94-05.06	16-18	6,5x16	58	Image Strong	62	68	12	2500,-		D
Jumper (large chassis)	06.06-	16-18	6,5x16	59	Image Strong M.Gun	62	68	12	2500,-		D
			6,5x16	61	Image Solid	68	68	0	2552,-	Maks bel. 1400 kg	D
			6,5x17	58	Image Strong	62	68	12	2884,-		D
			6,5x17	59	Image Strong M.Gun	62	68	12	2884,-		D
			7,5x18	58	Image Strong	58	68	20	3524,-	Maks bel. 1400 kg	D,M
			7,5x18	59	Image Strong M.Gun	58	68	20	3524,-	Maks bel. 1400 kg	D,M
DACIA			PCD: **4-100** Bolt - Mutter: **12x1,50B** CB: **60,1**								
Logan MCV	06.05-07.13	15-18	5,5x14	45	Image Ride	38	50	24	1392,-		
Logan pick-up	01.07-	15-18	5,5x15	34	CSP 16	50	50	0	1228,-	**OE-fit**	B,D
Sandero	06.08-12.12	15-19	6x15	19	ATS Streetrallye Slv	45	50	10	1960,-		
			6x15	34	CSP 16	40	50	20	1228,-	**OE-fit**	B,D
			6x15	35	CSP 16 M.Gun	40	50	20	1228,-	**OE-fit**	B,D
			6x15	37	Image Comet	40	50	20	1316,-	**OE-fit**	B,D
			6x15	38	Image Comet Slv	40	50	20	1316,-	**OE-fit**	B,D
			6x15	42	Image Brio	40	50	20	1304,-		B
			6x15	45	Image Ride	38	50	24	1552,-		
			6x16	19	ATS Streetrallye Slv	45	50	10	2240,-		
			6x16	37	Image Comet	40	50	20	1536,-	**OE-fit**	B,D
			6x16	38	Image Comet Slv	40	50	20	1536,-	**OE-fit**	B,D
			6,5x16	19	ATS Streetrallye Slv	40	50	20	2240,-		
			6,5x16	34	CSP 16	40	50	20	1468,-		D
			6,5x16	42	Image Brio	38	50	24	1524,-		B
			7x17	18	ATS Streetrallye Blk	45	50	10	3344,-		
			7x17	42	Image Brio	40	50	20	1832,-		B
			7,5x18	18	ATS Streetrallye Blk	38	50	24	4180,-		M
DACIA			PCD: **4-100** Bolt - Mutter: **12x1,50B** CB: **60,1**								
Dokker (SD)	04.13-	15-18	6x15	19	ATS Streetrallye Slv	38	40	4	1960,-		
Lodgy (SD)	04.12-	15-18	6x15	34	CSP 16	40	40	0	1228,-	**OE-fit**	B,D
Logan MCV	08.13-	15-18	6x15	35	CSP 16 M.Gun	40	40	0	1228,-	**OE-fit**	B,D
Sandero (SD)	01.13-	15-19	6x15	37	Image Comet	40	40	0	1316,-	**OE-fit**	B,D
Sandero (SD) Stepway	09.09-12.12	15-19	6x15	38	Image Comet Slv	40	40	0	1316,-	**OE-fit**	B,D
Sandero (SD) Stepway	01.13-	15-19	6x15	42	Image Brio	40	40	0	1304,-		B
			6x15	45	Image Ride	38	40	4	1552,-		
			6x16	37	Image Comet	40	40	0	1536,-	**OE-fit**	B,D
			6x16	38	Image Comet Slv	40	40	0	1536,-	**OE-fit**	B,D
			6,5x16	19	ATS Streetrallye Slv	40	40	0	2240,-		
			6,5x16	34	CSP 16	40	40	0	1468,-	**OE-fit**	B,D
			6,5x16	42	Image Brio	38	40	4	1524,-		B
			7x17	18	ATS Streetrallye Blk	45	40	-10	3344,-		
			7x17	42	Image Brio	40	40	0	1832,-		B
			7,5x18	18	ATS Streetrallye Blk	38	40	4	4180,-		M
DACIA			PCD: **4-100** Bolt - Mutter: **12x1,50B** CB: **60,1**								
Logan (SD) MCV Stepway	10.18-	16-20	6x16	37	Image Comet	40	37	-6	1536,-	**OE-fit**	B,D
			6x16	38	Image Comet Slv	40	37	-6	1536,-	**OE-fit**	B,D
			6,5x16	42	Image Brio	38	37	-2	1524,-		B
			7x17	42	Image Brio	40	37	-6	1832,-		B
			7,5x18	18	ATS Streetrallye Blk	38	37	-2	4180,-		
DACIA			PCD: **5-114,3** Bolt - Mutter: **12x1,50B** CB: **66,1**								
Duster (SD)	04.10-12.17	16-20	6,5x16	34	CSP 16	47	50	6	1468,-	**OE-fit**	B,D
Duster (SR)	01.18-	16-20	6,5x16	36	Image Colt	45	50	10	1624,-		B
			6,5x16	40	Image Spirit	40	50	20	1264,-	**OE-fit**	B,D
			6,5x16	46	Image Stella	40	50	20	1548,-	**OE-fit**	B,D
			6,5x16	47	Image Stella M.Blk	40	50	20	1548,-	**OE-fit**	B,D
			6,5x16	48	Image Motion	40	50	20	1468,-	**OE-fit**	B,D
			6,5x16	49	Image Motion G.Gun	40	50	20	1468,-	**OE-fit**	B,D
			6,5x16	50	Image Legend	40	50	20	1544,-	**OE-fit**	B,D
			6,5x16	92	Image Colt L.Gun	45	50	10	1548,-		B
			7x16	17	BM Drive M.Gun	40	50	20	1476,-		D
			7x17	17	BM Drive M.Gun	40	50	20	1736,-	**OE-fit**	B,D
			7x17	34	CSP 16	40	50	20	1836,-	**OE-fit**	B,D
			7x17	35	CSP 16 M.Gun	40	50	20	1836,-	**OE-fit**	B,D
			7x17	40	Image Spirit	40	50	20	1476,-	**OE-fit**	B,D
			7x17	46	Image Stella	40	50	20	1812,-	**OE-fit**	B,D
			7x17	47	Image Stella M.Blk	40	50	20	1812,-	**OE-fit**	B,D
			7x17	48	Image Motion	40	50	20	1736,-	**OE-fit**	B,D
			7x17	49	Image Motion G.Gun	40	50	20	1736,-	**OE-fit**	B,D
			7,5x17	9	Nitro Sabre G.Blk	45	50	10	3052,-		B
			7,5x17	36	Image Colt	45	50	10	1956,-		B
			7,5x17	50	Image Legend	40	50	20	1812,-	**OE-fit**	B,D
			7,5x17	92	Image Colt L.Gun	45	50	10	1876,-		B
			7,5x18	2	Nitro Sapphire FF	45	50	10	3944,-		B
			7,5x18	34	CSP 16	40	50	20	2444,-	**OE-fit**	B,D
			7,5x18	35	CSP 16 M.Gun	40	50	20	2444,-	**OE-fit**	B,D
			7,5x18	46	Image Stella	40	50	20	2276,-	**OE-fit**	B,D
			7,5x18	47	Image Stella M.Blk	40	50	20	2276,-	**OE-fit**	B,D
			8x18	7	Nitro Spark G.Blk/Grey	45	50	10	3476,-		B
			8x18	8	Nitro Spark G.Blk/Red	45	50	10	3476,-		B
			8x18	9	Nitro Sabre G.Blk	45	50	10	3496,-		B
			8x18	11	Nitro Demon	48	50	4	2784,-		
			8x18	16	Advanti Inizio DST	45	50	10	3828,-		B
			8x18	36	Image Colt	45	50	10	2412,-		B
			8x18	92	Image Colt L.Gun	45	50	10	2296,-		B
			7,5x19	2	Nitro Sapphire FF	45	50	10	4572,-		B
			8x19	16	Advanti Inizio DST	45	50	10	4412,-		B

Forts. neste side »

Bilmerke - Bilmodell	Årsmodell	Dimensjon	Felgdim.	Bilde	Felgmodell	ET Felg	ET Bil	Avvik ET	Veil. Pris eks. MVA	Merknader	B,C D, M
DACIA (forts.)				PCD: **5-114,3** Bolt - Mutter: **12x1,50B** CB: **66,1**							
			8,5x19	5	Nitro Volcano G.Gun	45	50	10	4388,-		B,M
			8,5x19	6	Nitro Volcano	45	50	10	4632,-		B,M
			8,5x19	9	Nitro Sabre G.Blk	45	50	10	4292,-		M
			8,5x19	36	Image Colt	45	50	10	3028,-		B,M
			8,5x19	92	Image Colt L.Gun	45	50	10	2876,-		B,M
			8x20	2	Nitro Sapphire FF	45	50	10	5096,-		B
			8,5x20	5	Nitro Volcano G.Gun	45	50	10	4824,-		B,M
			8,5x20	6	Nitro Volcano	45	50	10	5164,-		B,M
			8,5x20	7	Nitro Spark G.Blk/Grey	45	50	10	4660,-		B,M
			8,5x20	8	Nitro Spark G.Blk/Red	45	50	10	4660,-		B,M
			8,5x20	9	Nitro Sabre G.Blk	45	50	10	4800,-		B,M
			8,5x20	36	Image Colt	45	50	10	3432,-		B,M
			8,5x20	92	Image Colt L.Gun	45	50	10	3276,-		B,M
DAEWOO				PCD: **4-114,3** Bolt - Mutter: **12x1,25** CB: **69,1**							
Matiz	09.98-12.04	13-15	6x15	37	Image Comet	40	45	10	1316,-		M
			6x15	38	Image Comet Slv	40	45	10	1316,-		M
DAEWOO				PCD: **4-100** Bolt - Mutter: **12x1,50** CB: **56,6**							
Kalos	09.02-12.04	13-17	5x13	45	Image Ride	38	45	14	1336,-		
Lanos	06.97-03.04	14-17	5,5x14	45	Image Ride	38	45	14	1392,-		
Nexia	03.95-12.00	13-17	6x15	19	ATS Streetrallye Slv	38	45	14	1960,-		
Nubira	09.97-06.03	14-18	6x15	42	Image Brio	40	45	10	1304,-		
			6x15	45	Image Ride	38	45	14	1552,-		
			6x16	37	Image Comet	40	45	10	1536,-		
			6x16	38	Image Comet Slv	40	45	10	1536,-		
			6,5x16	34	CSP 16	40	45	10	1468,-		
			6,5x16	42	Image Brio	38	45	14	1524,-		
			7x17	42	Image Brio	40	45	10	1832,-		M
DAEWOO				PCD: **4-114,3** Bolt - Mutter: **12x1,50** CB: **56,6**							
Evanda	04.03-12.04	15-18	6x15	37	Image Comet	40	44	8	1316,-		
Lacetti	03.04-12.04	14-18	6x15	38	Image Comet Slv	40	44	8	1316,-		
Nubira	07.03-12.04	14-18	6x16	37	Image Comet	40	44	8	1536,-		
Rezzo	03.01-12.04	14-18									
Tacuma	03.01-12.04	14-18									
DAEWOO				PCD: **5-114,3** Bolt - Mutter: **12x1,50** CB: **56,6**							
Leganza	09.97-03.03	15-19	6,5x16	34	CSP 16	45	49	8	1468,-		
			6,5x16	35	CSP 16 M.Gun	45	49	8	1468,-		
			6,5x16	36	Image Colt	45	49	8	1624,-		
			6,5x16	48	Image Motion	45	49	8	1468,-		
			6,5x16	49	Image Motion G.Gun	45	49	8	1468,-		
			6,5x16	92	Image Colt L.Gun	45	49	8	1548,-		
			7x16	17	BM Drive M.Gun	45	49	8	1476,-		
			7x17	34	CSP 16	45	49	8	1836,-		
DAIHATSU				PCD: **4-100** Bolt - Mutter: **12x1,50** CB: **54,1**							
Cuore	09.03-01.13	13-14	5x13	45	Image Ride	38	40	4	1336,-		
Sirion	07.98-12.04	13-15	5,5x14	45	Image Ride	38	40	4	1392,-		
Sirion	01.05-01.13	14-16	6x15	45	Image Ride	38	40	4	1552,-		
Trevis	09.06-01.13	13-14									
YRV	01.01-12.05	13-16									
DAIHATSU				PCD: **4-100** Bolt - Mutter: **12x1,50** CB: **56,6**							
Applause	01.90-01.00	14-15	5,5x14	45	Image Ride	38	45	14	1392,-		
Charade	01.90-12.99	14-15	6x15	45	Image Ride	38	45	14	1552,-		
GranMove	04.97-12.02	14-15									
DAIHATSU				PCD: **5-114,3** Bolt - Mutter: **12x1,50** CB: **66,6**							
Terios (J2)	05.06-10.17	16-19	6,5x16	36	Image Colt	45	50	10	1624,-		
			6,5x16	92	Image Colt L.Gun	45	50	10	1548,-		
			7,5x17	9	Nitro Sabre G.Blk	45	50	10	3052,-		
			7,5x17	36	Image Colt	45	50	10	1956,-		
			7,5x17	92	Image Colt L.Gun	45	50	10	1876,-		
			7,5x18	2	Nitro Sapphire FF	45	50	10	3944,-		
			8x18	7	Nitro Spark G.Blk/Grey	45	50	10	3476,-		
			8x18	8	Nitro Spark G.Blk/Red	45	50	10	3476,-		
			8x18	9	Nitro Sabre G.Blk	45	50	10	3496,-		
			8x18	16	Advanti Inizio DST	45	50	10	3828,-		
			7,5x19	2	Nitro Sapphire FF	45	50	10	4572,-		
			8x19	16	Advanti Inizio DST	45	50	10	4412,-		
DODGE				PCD: **5-114,3** Bolt - Mutter: **12x1,50** CB: **67,1**							
Avenger	05.07-	16-20	6,5x16	36	Image Colt	35	39	8	1624,-		
Caliber	07.06-12.11	17-20	6,5x16	92	Image Colt L.Gun	35	39	8	1548,-		
SRT-4 18"			7,5x17	9	Nitro Sabre G.Blk	35	39	8	3052,-		
			7,5x17	36	Image Colt	35	39	8	1956,-		
			7,5x17	92	Image Colt L.Gun	35	39	8	1876,-		
			7,5x18	2	Nitro Sapphire FF	35	39	8	3944,-		
			8x18	7	Nitro Spark G.Blk/Grey	35	39	8	3476,-		
			8x18	8	Nitro Spark G.Blk/Red	35	39	8	3476,-		
			8x18	9	Nitro Sabre G.Blk	35	39	8	3496,-		
			8x18	16	Advanti Inizio DST	35	39	8	3828,-		
			8x18	36	Image Colt	35	39	8	2412,-		
			8x18	92	Image Colt L.Gun	35	39	8	2296,-		
			7,5x19	2	Nitro Sapphire FF	35	39	8	4572,-		
			8x19	11	Nitro Demon	38	39	2	3376,-		
			8x19	16	Advanti Inizio DST	35	39	8	4412,-		
			8,5x19	5	Nitro Volcano G.Gun	35	39	8	4388,-		
			8,5x19	6	Nitro Volcano	35	39	8	4632,-		
			8,5x19	9	Nitro Sabre G.Blk	35	39	8	4292,-		

Forts. neste side »

Bilmerke - Bilmodell	Årsmodell	Dimensjon	Felgdim.	Bilde	Felgmodell	ET Felg	ET Bil	Avvik ET	Veil. Pris eks. MVA	Merknader	B,C D, M
DODGE (forts.)			PCD: **5-114,3** Bolt - Mutter: **12x1,50** CB: **67,1**								
			8,5x19	36	Image Colt	35	39	8	3028,-		
			8,5x19	92	Image Colt L.Gun	35	39	8	2876,-		
			8,5x20	1	Nitro Throne FF	40	39	-2	5060,-		
			8,5x20	5	Nitro Volcano G.Gun	35	39	8	4824,-		
			8,5x20	6	Nitro Volcano	35	39	8	5164,-		
			8,5x20	7	Nitro Spark G.Blk/Grey	35	39	8	4660,-		
			8,5x20	8	Nitro Spark G.Blk/Red	35	39	8	4660,-		
			8,5x20	9	Nitro Sabre G.Blk	35	39	8	4800,-		
			8,5x20	11	Nitro Demon	38	39	2	3808,-		
			8,5x20	36	Image Colt	35	39	8	3432,-		
			8,5x20	92	Image Colt L.Gun	35	39	8	3276,-		
DODGE			PCD: **5-110** Bolt - Mutter: **12x1,25B** CB: **65,1**								
Dart	05.12-09.16	17-20	7x17	48	Image Motion	40	41	2	1736,-	**OE-fit**	B,D
			7,5x17	36	Image Colt	40	41	2	1956,-	**OE-fit**	B,D
			7,5x17	92	Image Colt L.Gun	40	41	2	1876,-		D
			8x17	48	Image Motion	34	41	14	1736,-		D
			8x18	36	Image Colt	40	41	2	2412,-	**OE-fit**	B,D
			8x18	48	Image Motion	34	41	14	2204,-		D
			8x18	92	Image Colt L.Gun	40	41	2	2296,-		D
DODGE			PCD: **5-114,3** Bolt - Mutter: **1/2”** CB: **71,5**								
Nitro (KJ)	01.07-12.11	17-22	7,5x17	9	Nitro Sabre G.Blk	35	40	10	3052,-		
(navhål 71.5 & mutter 1/2”)			7,5x17	36	Image Colt	35	40	10	1956,-		
			7,5x17	92	Image Colt L.Gun	35	40	10	1876,-		
			7,5x18	2	Nitro Sapphire FF	35	40	10	3944,-		
			8x18	7	Nitro Spark G.Blk/Grey	35	40	10	3476,-		
			8x18	8	Nitro Spark G.Blk/Red	35	40	10	3476,-		
			8x18	9	Nitro Sabre G.Blk	35	40	10	3496,-		
			8x18	16	Advanti Inizio DST	35	40	10	3828,-		
			8x18	36	Image Colt	35	40	10	2412,-		
			8x18	92	Image Colt L.Gun	35	40	10	2296,-		
			7,5x19	2	Nitro Sapphire FF	35	40	10	4572,-		
			8x19	11	Nitro Demon	38	40	4	3376,-		
			8x19	16	Advanti Inizio DST	35	40	10	4412,-		
			8,5x19	5	Nitro Volcano G.Gun	35	40	10	4388,-		
			8,5x19	6	Nitro Volcano	35	40	10	4632,-		
			8,5x19	9	Nitro Sabre G.Blk	35	40	10	4292,-		
			8,5x19	36	Image Colt	35	40	10	3028,-		
			8,5x19	92	Image Colt L.Gun	35	40	10	2876,-		
			8,5x20	1	Nitro Throne FF	40	40	0	5060,-		
			8,5x20	5	Nitro Volcano G.Gun	35	40	10	4824,-		
			8,5x20	6	Nitro Volcano	35	40	10	5164,-		
			8,5x20	7	Nitro Spark G.Blk/Grey	35	40	10	4660,-		
			8,5x20	8	Nitro Spark G.Blk/Red	35	40	10	4660,-		
			8,5x20	9	Nitro Sabre G.Blk	35	40	10	4800,-		
			8,5x20	11	Nitro Demon	38	40	4	3808,-		
			8,5x20	36	Image Colt	35	40	10	3432,-		
			8,5x20	92	Image Colt L.Gun	35	40	10	3276,-		
DODGE			PCD: **5-115** Bolt - Mutter: **14x1,50** CB: **71,5**								
Charger awd	01.07-	18-22	8x18	7	Nitro Spark G.Blk/Grey	35	55	40	3476,-		
Magnum kombi awd	01.05-12.08	18-22	8x18	8	Nitro Spark G.Blk/Red	35	55	40	3476,-		
Magnum sedan awd	01.04-12.08	18-22	8x18	16	Advanti Inizio DST	35	55	40	3828,-		
			8x19	11	Nitro Demon	38	55	34	3376,-		
			8x19	16	Advanti Inizio DST	35	55	40	4412,-		
			8,5x19	9	Nitro Sabre G.Blk	35	55	40	4292,-		
			8,5x20	7	Nitro Spark G.Blk/Grey	35	55	40	4660,-		
			8,5x20	8	Nitro Spark G.Blk/Red	35	55	40	4660,-		
			8,5x20	9	Nitro Sabre G.Blk	35	55	40	4800,-		
			8,5x20	11	Nitro Demon	38	55	34	3808,-		
DODGE			PCD: **5-114,3** Bolt - Mutter: **12x1,50** CB: **71,5**								
Caravan	03.01-11.07	16-20	6,5x16	36	Image Colt	35	40	10	1624,-		
			6,5x16	92	Image Colt L.Gun	35	40	10	1548,-		
			7,5x17	9	Nitro Sabre G.Blk	35	40	10	3052,-		
			7,5x17	36	Image Colt	35	40	10	1956,-		
			7,5x17	92	Image Colt L.Gun	35	40	10	1876,-		
			7,5x18	2	Nitro Sapphire FF	35	40	10	3944,-		
			8x18	7	Nitro Spark G.Blk/Grey	35	40	10	3476,-		
			8x18	8	Nitro Spark G.Blk/Red	35	40	10	3476,-		
			8x18	9	Nitro Sabre G.Blk	35	40	10	3496,-		
			8x18	16	Advanti Inizio DST	35	40	10	3828,-		
			8x18	36	Image Colt	35	40	10	2412,-		
			8x18	92	Image Colt L.Gun	35	40	10	2296,-		
			7,5x19	2	Nitro Sapphire FF	35	40	10	4572,-		
			8x19	11	Nitro Demon	38	40	4	3376,-		
			8x19	16	Advanti Inizio DST	35	40	10	4412,-		
			8,5x19	9	Nitro Sabre G.Blk	35	40	10	4292,-		
			8,5x19	36	Image Colt	35	40	10	3028,-		
			8,5x19	92	Image Colt L.Gun	35	40	10	2876,-		
			8,5x20	7	Nitro Spark G.Blk/Grey	35	40	10	4660,-		
			8,5x20	8	Nitro Spark G.Blk/Red	35	40	10	4660,-		
			8,5x20	9	Nitro Sabre G.Blk	35	40	10	4800,-		
			8,5x20	11	Nitro Demon	38	40	4	3808,-		
			8,5x20	36	Image Colt	35	40	10	3432,-		
			8,5x20	92	Image Colt L.Gun	35	40	10	3276,-		

Bilmerke - Bilmodell	Årsmodell	Dimensjon	Felgdim.	Bilde	Felgmodell	ET Felg	ET Bil	Avvik ET	Veil. Pris eks. MVA	Merknader	B,C D, M
DODGE				PCD: **5-127** Bolt - Mutter: **12x1,50** CB: **71,5**							
Caravan	12.07-	16-22	7x16	65	CSP Work	40	40	0	2556,-		D
(Kun biler med 16" orig.			8x18	68	BM Macho	40	40	0	3300,-		D
kan ha 16", andre 17")			8x18	69	BM Macho M.Blk	40	40	0	3300,-		D
Journey	07.08-12.10	16-22	9x20	12	Nitro Edge M.Blk	40	40	0	4220,-		D,M
2.0CRD, 2.7 17"			9x22	12	Nitro Edge M.Blk	40	40	0	4888,-		D,M
DODGE				PCD: **5-139,7** Bolt - Mutter: **9/16"** CB: **78,1**							
Dakota	08.04-08.11	16-22	7,5x17	68	BM Macho	20	26	12	2756,-		D
Durango	04-12.08	17-22	7,5x17	69	BM Macho M.Blk	20	26	12	2756,-		D
Ram 1500	97-03	16-24	9x17	74	Ballistic Morax	12	26	28	4020,-		M
(97-03 mutter 1/2")			8x18	68	BM Macho	20	26	12	3300,-		D
Ram 1500	01.03-12.08	17-24	8x18	69	BM Macho M.Blk	20	26	12	3300,-		D
Ram 1500	01.09-03.12	17-26	9x18	74	Ballistic Morax	12	26	28	4276,-		M
Ram 2500	97-12.02	16-24	9x20	68	BM Macho	20	26	12	4288,-		D
(97-03 mutter 1/2")			9x20	69	BM Macho M.Blk	20	26	12	4288,-		D
Ram SRT-10	01.03-12.08	20-24	9x20	72	Ballistic Dakota	20	26	12	4624,-		D
			9x20	74	Ballistic Morax	12	26	28	4740,-		M
			9x22	72	Ballistic Dakota	20	26	12	5128,-		D
DODGE				PCD: **5-139,7** Bolt - Mutter: **14x1,50** CB: **78,1**							
Ram 1500	04.12-01.18	17-26	7,5x17	68	BM Macho	20	26	12	2756,-		D
			7,5x17	69	BM Macho M.Blk	20	26	12	2756,-		D
			9x17	74	Ballistic Morax	12	26	28	4020,-		
			8x18	68	BM Macho	20	26	12	3300,-		D
			8x18	69	BM Macho M.Blk	20	26	12	3300,-		D
			9x18	74	Ballistic Morax	12	26	28	4276,-		M
			9x20	68	BM Macho	20	26	12	4288,-		D
			9x20	69	BM Macho M.Blk	20	26	12	4288,-		D
			9x20	72	Ballistic Dakota	20	26	12	4624,-		D
			9x20	74	Ballistic Morax	12	26	28	4740,-		M
			9x22	72	Ballistic Dakota	20	26	12	5128,-		D
DODGE				PCD: **5-127** Bolt - Mutter: **14x1,50** CB: **71,5**							
Durango	12.10-	18-22	8x18	68	BM Macho	40	48	16	3300,-		D
			8x18	69	BM Macho M.Blk	40	48	16	3300,-		D
			9x20	12	Nitro Edge M.Blk	40	48	16	4220,-		D
			9x20	72	Ballistic Dakota	50	48	-4	4624,-		D
			9x22	12	Nitro Edge M.Blk	40	48	16	4888,-		D
			9x22	72	Ballistic Dakota	50	48	-4	5128,-		D
DODGE				PCD: **6-139,7** Bolt - Mutter: **14x1,50** CB: **78,1**							
Ram 1500	02.18-	20-26	9x20	68	BM Macho	20	19	-2	4288,-		
			9x20	69	BM Macho M.Blk	20	19	-2	4288,-		
			9x20	72	Ballistic Dakota	20	19	-2	4624,-		D
			9x20	74	Ballistic Morax	12	19	14	4740,-		
			9x22	72	Ballistic Dakota	20	19	-2	5128,-		D
DODGE				PCD: **8-165** Bolt - Mutter: **9/16"** CB: **117,0**							
Pick-up 8-bult	71-93	16-24	9x17	74	Ballistic Morax	12	0	-24	4020,-		M
Ram 2500	01.03-12.11	17-24	9x18	74	Ballistic Morax	12	0	-24	4276,-		M
Ram 3500	94-12.02	16-24	9x20	74	Ballistic Morax	12	0	-24	4740,-		M
Ram 3500	01.03-12.11	17-24									
Van 8-bult	71-93	16-24									
(Ældre biler kan ha mutter 1/2")											
DODGE				PCD: **8-165** Bolt - Mutter: **14x1,50** CB: **121,0**							
Ram 2500	01.12-	17-24	9x17	74	Ballistic Morax	12	42	60	4020,-		
Ram 3500	01.12-	17-24	9x18	74	Ballistic Morax	12	42	60	4276,-		
			9x20	74	Ballistic Morax	12	42	60	4740,-		
FIAT				PCD: **4-100** Bolt - Mutter: **12x1,50B** CB: **56,6**							
Grande Punto	10.05-10.09	15-19	6x15	19	ATS Streetrallye Slv	45	43	-4	1960,-		
Punto (199) Evo	11.09-	15-19	6x15	37	Image Comet	40	43	6	1316,-		
Abarth 17"			6x15	42	Image Brio	40	43	6	1304,-		B
Abarth Essese 17"			6x15	45	Image Ride	38	43	10	1552,-	Eksenterbolter	
			6x16	19	ATS Streetrallye Slv	45	43	-4	2240,-		
			6x16	37	Image Comet	40	43	6	1536,-		
			6x16	38	Image Comet Slv	40	43	6	1536,-		
			6,5x16	19	ATS Streetrallye Slv	40	43	6	2240,-		
			6,5x16	34	CSP 16	40	43	6	1468,-		
			6,5x16	42	Image Brio	38	43	10	1524,-		B
			7x17	42	Image Brio	40	43	6	1832,-		B
FIAT				PCD: **4-98** Bolt - Mutter: **12x1,25B** CB: **58,1**							
Panda (312)	03.12-	14-17	5,5x14	37	Image Comet	35	35	0	1264,-	**OE-fit**	B,D
Panda (312) 4x4	03.13-	15-18	5,5x14	38	Image Comet Slv	35	35	0	1264,-	**OE-fit**	B,D
			5,5x14	45	Image Ride	38	35	-6	1392,-	Eksenterbolter	
			6x15	19	ATS Streetrallye Slv	35	35	0	1960,-		D
			6x15	37	Image Comet	40	35	-10	1316,-	**OE-fit**	B,D
			6x15	38	Image Comet Slv	40	35	-10	1316,-	**OE-fit**	B,D
			6x15	45	Image Ride	38	35	-6	1552,-	Eksenterbolter	
			6x16	37	Image Comet	40	35	-10	1536,-	**OE-fit**	B,D
			6x16	38	Image Comet Slv	40	35	-10	1536,-	**OE-fit**	B,D
			6,5x16	19	ATS Streetrallye Slv	35	35	0	2240,-		D,M

Bilmerke - Bilmodell	Årsmodell	Dimensjon	Felgdim.	Bilde	Felgmodell	ET Felg	ET Bil	Avvik ET	Veil. Pris eks. MVA	Merknader	B,C D, M
FIAT			PCD: **4-98** Bolt - Mutter: **12x1,25B** CB: **58,1**								
Palio	01.98-12.06	14-17	5x13	45	Image Ride	38	35	-6	1336,-	Eksenterbolter	
Panda	09.03-02.12	13-16	5,5x14	37	Image Comet	35	35	0	1264,-	**OE-fit**	B,D
Panda 4x4	09.03-02.12	14-16	5,5x14	38	Image Comet Slv	35	35	0	1264,-	**OE-fit**	B,D
Punto	11.93-08.99	13-16	5,5x14	45	Image Ride	38	35	-6	1392,-	Eksenterbolter	
Punto	09.99-01.07	13-17	6x15	19	ATS Streetrallye Slv	35	35	0	1960,-		D
Tipo	06.88-08.95	14-17	6x15	37	Image Comet	40	35	-10	1316,-	**OE-fit**	B,D
			6x15	38	Image Comet Slv	40	35	-10	1316,-	**OE-fit**	B,D
			6x15	45	Image Ride	38	35	-6	1552,-	Eksenterbolter	
			6x16	37	Image Comet	40	35	-10	1536,-	**OE-fit**	B,D
			6x16	38	Image Comet Slv	40	35	-10	1536,-	**OE-fit**	B,D
FIAT			PCD: **4-100** Bolt - Mutter: **12x1,50** CB: **54,1**								
124 Spider (NF)	06.16-	16-18	6,5x16	19	ATS Streetrallye Slv	40	45	10	2240,-		
Abarth 17"			6,5x16	34	CSP 16	40	45	10	1468,-		
			6,5x16	42	Image Brio	38	45	14	1524,-		
			7x17	18	ATS Streetrallye Blk	45	45	0	3344,-		
			7x17	42	Image Brio	40	45	10	1832,-		
			7,5x18	18	ATS Streetrallye Blk	38	45	14	4180,-		
FIAT			PCD: **4-98** Bolt - Mutter: **12x1,25B** CB: **58,1**								
500 (312)	01.07-	14-17	5,5x14	37	Image Comet	35	43	16	1264,-	**OE-fit**	B,D
Abarth 16"			5,5x14	38	Image Comet Slv	35	43	16	1264,-	**OE-fit**	B,D
Abarth Essesse 16"			5,5x14	45	Image Ride	38	43	10	1392,-	Eksenterbolter	
Albea	10.07-12.12	14-18	6x15	19	ATS Streetrallye Slv	35	43	16	1960,-		D
Barchetta	04.95-11.05	15-18	6x15	34	CSP 16	40	43	6	1228,-	**OE-fit**	B,D
Brava	09.95-08.01	14-18	6x15	37	Image Comet	40	43	6	1316,-	**OE-fit**	B,D
Bravo	09.95-08.01	14-18	6x15	38	Image Comet Slv	40	43	6	1316,-	**OE-fit**	B,D
Coupe	06.94-07.00	15-18	6x15	45	Image Ride	38	43	10	1552,-	Eksenterbolter	
Doblo	03.01-09.05	14-18	6x16	37	Image Comet	40	43	6	1536,-	**OE-fit**	B,D
Doblo	10.05-01.10	15-18	6x16	38	Image Comet Slv	40	43	6	1536,-	**OE-fit**	B,D
(Facelift)			6,5x16	19	ATS Streetrallye Slv	35	43	16	2240,-		D
Idea	01.04-09.12	14-18									
Linea	07.07-10.15	15-19									
Marea	09.96-08.01	14-18									
Multipla	04.99-04.10	15-18									
Stilo	09.01-12.07	15-19									
Strada	06.99-06.12	14-18									
Strada (278)	07.12-12.16	15-18									
FIAT			PCD: **4-98** Bolt - Mutter: **12x1,25B** CB: **58,1**								
500 (312) Abarth	01.09-	16-17	6,5x16	19	ATS Streetrallye Slv	35	38	6	2240,-		D
FIAT			PCD: **4-98** Bolt - Mutter: **12x1,25B** CB: **58,1**								
Bravo (198)	04.07-07.14	15-18	6x15	19	ATS Streetrallye Slv	35	32	-7	1960,-		D
			6,5x16	19	ATS Streetrallye Slv	35	32	-7	2240,-		D
FIAT			PCD: **5-98** Bolt - Mutter: **12x1,25B** CB: **58,1**								
500 (199) L	10.12-	15-19	6x15	48	Image Motion	38	37	-3	1224,-	**OE-fit**	B,D
1.4, 1.6D 16"			6,5x16	48	Image Motion	38	37	-3	1468,-	**OE-fit**	B,D
500 (199) L trekking	06.13-	15-19	6,5x16	54	Image Vector	36	37	1	1956,-	**OE-fit**	B,D
1.4, 1.6D 16"			7x17	54	Image Vector	36	37	1	2576,-	**OE-fit**	B,D
Tipo (356)	01.16-	15-20									
FIAT			PCD: **5-110** Bolt - Mutter: **12x1,25B** CB: **65,1**								
500 X	09.14-	16-20	6,5x16	36	Image Colt	40	41	2	1624,-	**OE-fit**	B,D
2.0 17"			6,5x16	48	Image Motion	40	41	2	1468,-	**OE-fit**	B,D
Croma	06.05-10.07	16-20	6,5x16	92	Image Colt L.Gun	40	41	2	1548,-	**OE-fit**	B,D
Croma (194)	11.07-04.10	16-20	7x16	17	BM Drive M.Gun	40	41	2	1476,-	Eksenterbolter	D
			7x17	48	Image Motion	40	41	2	1736,-	**OE-fit**	B,D
			7,5x17	36	Image Colt	40	41	2	1956,-	**OE-fit**	B,D
			7,5x17	92	Image Colt L.Gun	40	41	2	1876,-	**OE-fit**	B,D
			8x17	48	Image Motion	34	41	14	1736,-		D,M
			8x18	11	Nitro Demon	40	41	2	2784,-	Eksenterbolter	D
			8x18	36	Image Colt	40	41	2	2412,-	**OE-fit**	B,D
			8x18	48	Image Motion	34	41	14	2204,-		D,M
			8x18	92	Image Colt L.Gun	40	41	2	2296,-	**OE-fit**	B,D
			8x19	11	Nitro Demon	40	41	2	3376,-	Eksenterbolter	D
FIAT			PCD: **5-98** Bolt - Mutter: **12x1,25B** CB: **58,1**								
Doblo (263)	02.10-	15-20	6x15	48	Image Motion	38	39	2	1224,-	**OE-fit**	B,D
1.4, 2.0D 16"			6,5x16	48	Image Motion	38	39	2	1468,-	**OE-fit**, Maks bel. 690 kg	B,D
Doblo (263) Maxi	02.10-	16-20	6,5x16	54	Image Vector	36	39	6	1956,-	**OE-fit**	B,D
(långa hjulbasen)			7x17	54	Image Vector	36	39	6	2576,-	**OE-fit**	B,D
FIAT			PCD: **5-114,3** Bolt - Mutter: **12x1,50B** CB: **60,1**								
Seidici	04.06-08.14	15-19	6x15	48	Image Motion	45	50	10	1224,-		
			6,5x16	34	CSP 16	50	50	0	1468,-	**OE-fit**	B,D
			6,5x16	35	CSP 16 M.Gun	50	50	0	1468,-	**OE-fit**	B,D
			6,5x16	36	Image Colt	45	50	10	1624,-		B
			6,5x16	40	Image Spirit	45	50	10	1264,-		B
			6,5x16	46	Image Stella	45	50	10	1548,-		B
			6,5x16	47	Image Stella M.Blk	45	50	10	1548,-		B
			6,5x16	49	Image Motion G.Gun	45	50	10	1468,-		
			6,5x16	92	Image Colt L.Gun	45	50	10	1548,-		B
			7x17	17	BM Drive M.Gun	50	50	0	1736,-		
			7x17	40	Image Spirit	45	50	10	1476,-		B
			7x17	48	Image Motion	45	50	10	1736,-		B
			7x17	49	Image Motion G.Gun	45	50	10	1736,-		
			7,5x17	9	Nitro Sabre G.Blk	45	50	10	3052,-		B
			7,5x17	36	Image Colt	45	50	10	1956,-		B
			7,5x17	92	Image Colt L.Gun	45	50	10	1876,-		B
			7,5x18	2	Nitro Sapphire FF	45	50	10	3944,-		B

Forts. neste side »

Bilmerke - Bilmodell	Årsmodell	Dimensjon	Felgdim.	Bilde	Felgmodell	ET Felg	ET Bil	Avvik ET	Veil. Pris eks. MVA	Merknader	B,C D, M
FIAT (forts.)				PCD: **5-114,3** Bolt - Mutter: **12x1,50B**		CB: **60,1**					
			8x18	7	Nitro Spark G.Blk/Grey	45	50	10	3476,-		B
			8x18	8	Nitro Spark G.Blk/Red	45	50	10	3476,-		B
			8x18	9	Nitro Sabre G.Blk	45	50	10	3496,-		B
			8x18	11	Nitro Demon	48	50	4	2784,-		
			8x18	16	Advanti Inizio DST	45	50	10	3828,-		B
			8x18	36	Image Colt	45	50	10	2412,-		B
			8x18	48	Image Motion	45	50	10	2204,-		
			8x18	49	Image Motion G.Gun	45	50	10	2204,-		
			8x18	92	Image Colt L.Gun	45	50	10	2296,-		B
			7,5x19	2	Nitro Sapphire FF	45	50	10	4572,-		B
			8x19	16	Advanti Inizio DST	45	50	10	4412,-		B
FIAT				PCD: **5-127** Bolt - Mutter: **12x1,50**		CB: **71,5**					
Freemont (JC)	08.11-12.16	17-22	8x18	68	BM Macho	40	40	0	3300,-		D
			8x18	69	BM Macho M.Blk	40	40	0	3300,-		D
			9x20	12	Nitro Edge M.Blk	40	40	0	4220,-		D,M
			9x22	12	Nitro Edge M.Blk	40	40	0	4888,-		D,M
FIAT				PCD: **4-98** Bolt - Mutter: **12x1,25B**		CB: **58,1**					
Fiorino (225)	02.08-	14-18	5,5x14	37	Image Comet	35	44	18	1264,-	**OE-fit**	B,D
1.3JTD (70kW) 15"			5,5x14	38	Image Comet Slv	35	44	18	1264,-	**OE-fit**	B,D
1.4 Naturalpower (57kW) 15"			5,5x14	45	Image Ride	38	44	12	1392,-	Eksenterbolter	
Qubo (225)	01.10-	15-18	6x15	19	ATS Streetrallye Slv	35	44	18	1960,-		D
			6x15	34	CSP 16	40	44	8	1228,-	**OE-fit**	B,D
			6x15	37	Image Comet	40	44	8	1316,-	**OE-fit**	B,D
			6x15	38	Image Comet Slv	40	44	8	1316,-	**OE-fit**	B,D
			6x15	45	Image Ride	38	44	12	1552,-	Eksenterbolter	
			6x16	37	Image Comet	40	44	8	1536,-	**OE-fit**	B,D
			6x16	38	Image Comet Slv	40	44	8	1536,-	**OE-fit**	B,D
			6,5x16	19	ATS Streetrallye Slv	35	44	18	2240,-		D
FIAT				PCD: **5-108** Bolt - Mutter: **12x1,25B**		CB: **65,1**					
Scudo (270)	10.06-04.16	15-19	8x18	53	Nitro Hammer	42	42	0	3256,-		D
2.0HDi 16"			8,5x20	53	Nitro Hammer	42	42	0	4268,-	Maks bel. 880 kg	D,M
FIAT				PCD: **5-114,3** Bolt - Mutter: **14x1,50B**		CB: **66,1**					
Scudo	05.16-	16-20	6,5x16	54	Image Vector	50	50	0	1956,-	**OE-fit**	B,D
Talento	08.16-	16-20	6,5x16	55	Image Vector Slv	50	50	0	1956,-	**OE-fit**	B,D
			7x17	54	Image Vector	50	50	0	2576,-	**OE-fit**	B,D
			7x17	55	Image Vector Slv	50	50	0	2576,-	**OE-fit**	B,D
			8x18	53	Nitro Hammer	45	50	10	3256,-	**OE-fit**	B,D
			8,5x20	1	Nitro Throne FF	40	50	20	5060,-	Maks bel. 950 kg	B,M
			8,5x20	53	Nitro Hammer	45	50	10	4268,-	**OE-fit**	B,D
FIAT				PCD: **5-118** Bolt - Mutter: **14x1,50B**		CB: **71,1**					
Ducato (small chassis)	03.94-05.06	15-18	6x15	58	Image Strong	62	68	12	2116,-		D
			6x15	59	Image Strong M.Gun	62	68	12	2116,-		D
			6,5x16	58	Image Strong	62	68	12	2500,-		D
			6,5x16	59	Image Strong M.Gun	62	68	12	2500,-		D
			6,5x17	58	Image Strong	62	68	12	2884,-		D
			6,5x17	59	Image Strong M.Gun	62	68	12	2884,-		D
FIAT				PCD: **5-118** Bolt - Mutter: **14x1,50B**		CB: **71,1**					
Ducato (light chassis)	09.14-	15-18	6x15	58	Image Strong	62	68	12	2116,-		D
Ducato (small chassis)	06.06-08.14	15-18	6x15	59	Image Strong M.Gun	62	68	12	2116,-		D
			6,5x16	58	Image Strong	62	68	12	2500,-		D
			6,5x16	59	Image Strong M.Gun	62	68	12	2500,-		D
			6,5x16	61	Image Solid	68	68	0	2552,-	Maks bel. 1400 kg	D
			6,5x17	58	Image Strong	62	68	12	2884,-		D
			6,5x17	59	Image Strong M.Gun	62	68	12	2884,-		D
FIAT				PCD: **5-130** Bolt - Mutter: **16x1,50B**		CB: **78,1**					
Ducato (large chassis)	03.94-05.06	16-18	6,5x16	58	Image Strong	62	68	12	2500,-		D
Maxi			6,5x16	59	Image Strong M.Gun	62	68	12	2500,-		D
			6,5x17	58	Image Strong	62	68	12	2884,-		D
			6,5x17	59	Image Strong M.Gun	62	68	12	2884,-		D
			7,5x18	58	Image Strong	58	68	20	3524,-	Maks bel. 1400 kg	D,M
			7,5x18	59	Image Strong M.Gun	58	68	20	3524,-	Maks bel. 1400 kg	D,M
FIAT				PCD: **5-130** Bolt - Mutter: **16x1,50B**		CB: **78,1**					
Ducato (heavy chassis)	09.14-	16-18	6,5x16	58	Image Strong	62	68	12	2500,-		D
Maxi			6,5x16	59	Image Strong M.Gun	62	68	12	2500,-		D
Ducato (large chassis)	06.06-08.14	16-18	6,5x16	61	Image Solid	68	68	0	2552,-	Maks bel. 1400 kg	D
Maxi			6,5x17	58	Image Strong	62	68	12	2884,-		D
			6,5x17	59	Image Strong M.Gun	62	68	12	2884,-		D
			7,5x18	58	Image Strong	58	68	20	3524,-	Maks bel. 1400 kg	D,M
			7,5x18	59	Image Strong M.Gun	58	68	20	3524,-	Maks bel. 1400 kg	D,M
FIAT				PCD: **6-139,7** Bolt - Mutter: **12x1,50**		CB: **67,1**					
Fullback	03.16-	17-22	7,5x17	67	Image Rock	38	38	0	2796,-	**OE-fit**	B,D
			7,5x17	68	BM Macho	35	38	6	2756,-		D
			7,5x17	69	BM Macho M.Blk	35	38	6	2756,-		D
			9x17	74	Ballistic Morax	12	38	52	4020,-		M
			7,5x18	67	Image Rock	38	38	0	3324,-	**OE-fit**	B,D
			8x18	68	BM Macho	35	38	6	3300,-		D
			8x18	69	BM Macho M.Blk	35	38	6	3300,-		D
			9x18	74	Ballistic Morax	12	38	52	4276,-		M
			9x20	68	BM Macho	35	38	6	4288,-		D
			9x20	69	BM Macho M.Blk	35	38	6	4288,-		D
			9x20	72	Ballistic Dakota	35	38	6	4624,-		D
			9x20	74	Ballistic Morax	12	38	52	4740,-		M
			9x22	72	Ballistic Dakota	35	38	6	5128,-		D

Bilmerke - Bilmodell	Årsmodell	Dimensjon	Felgdim.	Bilde	Felgmodell	ET Felg	ET Bil	Avvik ET	Veil. Pris eks. MVA	Merknader	B,C D, M
FORD				PCD: **4-98** Bolt - Mutter: **12x1,25B** CB: **58,1**							
KA (RU8)	01.09-10.16	14-18	5,5x14	37	Image Comet	35	35	0	1264,-	**OE-fit**	B,D
			5,5x14	38	Image Comet Slv	35	35	0	1264,-	**OE-fit**	B,D
			5,5x14	45	Image Ride	38	35	-6	1392,-	Eksenterbolter	
			6x15	19	ATS Streetrallye Slv	35	35	0	1960,-		D
			6x15	34	CSP 16	40	35	-10	1228,-	**OE-fit**	B,D
			6x15	37	Image Comet	40	35	-10	1316,-	**OE-fit**	B,D
			6x15	38	Image Comet Slv	40	35	-10	1316,-	**OE-fit**	B,D
			6x15	45	Image Ride	38	35	-6	1552,-	Eksenterbolter	
			6x16	37	Image Comet	40	35	-10	1536,-	**OE-fit**	B,D
			6x16	38	Image Comet Slv	40	35	-10	1536,-	**OE-fit**	B,D
			6,5x16	19	ATS Streetrallye Slv	35	35	0	2240,-		D
FORD				PCD: **4-108** Bolt - Mutter: **12x1,50** CB: **63,4**							
B-Max (JK8)	07.12-09.17	15-19	6x15	19	ATS Streetrallye Slv	38	38	-1	1960,-		D
EcoSport (JK8)	02.14-01.18	15-19	6x15	37	Image Comet	37	38	1	1316,-	**OE-fit**	B,D
EcoSport (JK8) facelift	02.18-	16-18	6x15	42	Image Brio	38	38	-1	1304,-	**OE-fit**	B,D
Tourneo (JU2) Courier	04.14-	14-19	6x15	45	Image Ride	38	38	-1	1552,-		D
Transit (JN8) Courier	04.14-	14-19	6x16	19	ATS Streetrallye Slv	35	38	5	2240,-		D
			6x16	37	Image Comet	40	38	-5	1536,-	**OE-fit**	B,D
			6x16	38	Image Comet Slv	40	38	-5	1536,-	**OE-fit**	B,D
			6,5x16	42	Image Brio	38	38	-1	1524,-	**OE-fit**	B,D
			7x17	42	Image Brio	38	38	-1	1832,-	**OE-fit**	B,D
FORD				PCD: **4-108** Bolt - Mutter: **12x1,50** CB: **63,4**							
Cougar coupe	03.99-06.04	15-19	5,5x14	37	Image Comet	37	48	21	1264,-	**OE-fit**	B,D
Fiesta	04.02-09.08	14-18	5,5x14	45	Image Ride	38	48	19	1392,-		D
ST150, ST170 15”			6x15	19	ATS Streetrallye Slv	38	48	19	1960,-		D
Fiesta (JA8)	10.08-08.17	14-18	6x15	37	Image Comet	45	48	5	1316,-	**OE-fit**	B,D
S 1.6 (100kW) 16”			6x15	42	Image Brio	38	48	19	1304,-	**OE-fit**	B,D
ST (134kW) 16”			6x15	45	Image Ride	38	48	19	1552,-		D
Fiesta (JHH)	09.17-	15-18	6x16	19	ATS Streetrallye Slv	35	48	25	2240,-		D
Fiesta Van	08.07-04.10	14-18	6x16	37	Image Comet	40	48	15	1536,-	**OE-fit**	B,D
Fiesta Van	05.10-12.17	14-18	6x16	38	Image Comet Slv	40	48	15	1536,-	**OE-fit**	B,D
Focus	10.98-11.04	14-19	6,5x16	42	Image Brio	38	48	19	1524,-	**OE-fit**	B,D
Focus ST170	09.02-10.04	16-18	7x17	42	Image Brio	38	48	19	1832,-	**OE-fit**	B,D
Focus turnier	10.98-11.04	14-19									
Fusion (JU2)	10.02-06.12	14-18									
KA+ (KAF)	10.16-	14-18									
Mondeo	06.93-08.98	14-18									
2.0i 4x4 15!											
2.5i V6 15”											
Mondeo	09.98-11.00	15-18									
Mondeo 2.5i ST200	02.95-11.00	15-18									
Scorpio	01.95-07.98	15-19									
FORD				PCD: **5-108** Bolt - Mutter: **12x1,50** CB: **63,4**							
C-Max (DM2)	06.03-09.10	15-19	6x15	17	BM Drive M.Gun	40	53	25	1276,-		
1.8TDCi 2.0TDCi 2.0i 16”			6x15	48	Image Motion	40	53	25	1224,-		B
Focus (DA3)	12.04-02.11	15-20	6x15	49	Image Motion G.Gun	40	53	25	1224,-		B
1.8TDCi 2.0TDCi 16”			6,5x16	36	Image Colt	45	53	15	1624,-	**OE-fit**	B,D
2.0i ST220 16”			6,5x16	92	Image Colt L.Gun	45	53	15	1548,-	**OE-fit**	B,D
Focus (DA3) cab	05.07-07.10	16-20	7x16	17	BM Drive M.Gun	50	53	5	1476,-		D
Focus (DA3) turnier	12.04-02.11	15-20	7x16	40	Image Spirit	45	53	15	1264,-	**OE-fit**	B,D
1.8TDCi 2.0TDCi 16”			7x16	46	Image Stella	50	53	5	1548,-	**OE-fit**	B,D
2.0i ST220 16”			7x16	47	Image Stella M.Blk	50	53	5	1548,-	**OE-fit**	B,D
Transit Connect	01.03-06.13	15-20	7x16	48	Image Motion	50	53	5	1468,-	**OE-fit**	B,D
			7x16	49	Image Motion G.Gun	50	53	5	1468,-	**OE-fit**	B,D
			7x16	50	Image Legend	50	53	5	1544,-	**OE-fit**	B,D
			7,5x17	9	Nitro Sabre G.Blk	45	53	15	3052,-	**OE-fit**	B,D
			7,5x17	22	ATS Evolution	50	53	5	2268,-	**OE-fit**	B,D
			7,5x17	23	ATS Evolution G.Grey	50	53	5	2340,-		D
			7,5x17	36	Image Colt	47	53	11	1956,-	**OE-fit**	B,D
			7,5x17	46	Image Stella	50	53	5	1812,-	**OE-fit**	B,D
			7,5x17	47	Image Stella M.Blk	50	53	5	1812,-	**OE-fit**	B,D
			7,5x17	50	Image Legend	45	53	15	1812,-	**OE-fit**	B,D
			7,5x17	92	Image Colt L.Gun	47	53	11	1876,-	**OE-fit**	B,D
			8x17	17	BM Drive M.Gun	48	53	9	1736,-		D
			8x17	48	Image Motion	50	53	5	1736,-	**OE-fit**	B,D
			8x17	49	Image Motion G.Gun	50	53	5	1736,-	**OE-fit**	B,D
			7,5x18	2	Nitro Sapphire FF	50	53	5	3944,-	**OE-fit**	B,D
			7,5x18	22	ATS Evolution	50	53	5	3016,-	**OE-fit**	B,D
			7,5x18	23	ATS Evolution G.Grey	50	53	5	3116,-		D
			7,5x18	46	Image Stella	50	53	5	2276,-	**OE-fit**	B,D
			7,5x18	47	Image Stella M.Blk	50	53	5	2276,-	**OE-fit**	B,D
			8x18	7	Nitro Spark G.Blk/Grey	47	53	11	3476,-	**OE-fit**	B,D
			8x18	8	Nitro Spark G.Blk/Red	45	53	15	3476,-		B
			8x18	9	Nitro Sabre G.Blk	47	53	11	3496,-	**OE-fit**	B,D
			8x18	11	Nitro Demon	48	53	9	2784,-		D
			8x18	16	Advanti Inizio DST	42	53	21	3828,-	**OE-fit**	B,D,M
			8x18	17	BM Drive M.Gun	48	53	9	2296,-		D
			8x18	36	Image Colt	47	53	11	2412,-	**OE-fit**	B,D
			8x18	41	Image Thor	42	53	21	2412,-		D,M
			8x18	48	Image Motion	50	53	5	2204,-	**OE-fit**	B,D
			8x18	49	Image Motion G.Gun	50	53	5	2204,-	**OE-fit**	B,D
			8x18	50	Image Legend	50	53	5	2276,-	**OE-fit**	B,D
			8x18	92	Image Colt L.Gun	47	53	11	2296,-	**OE-fit**	B,D
			7,5x19	2	Nitro Sapphire FF	50	53	5	4572,-	**OE-fit**	B,D
			8x19	3	Nitro Turismo FF	50	53	5	4492,-	**OE-fit**	B,D

Forts. neste side »

Bilmerke - Bilmodell	Årsmodell	Dimensjon	Felgdim.	Bilde	Felgmodell	ET Felg	ET Bil	Avvik ET	Veil. Pris eks. MVA	Merknader	B,C D, M
FORD (forts.)				PCD: **5-108** Bolt - Mutter: **12x1,50** CB: **63,4**							
			8x19	4	Nitro Turismo FF G.Gun/Pol	50	53	5	4644,-	**OE-fit**	B,D
			8x19	10	Nitro Demon H.Slv	48	53	9	3624,-		D
			8x19	11	Nitro Demon	48	53	9	3376,-		D
			8x19	16	Advanti Inizio DST	42	53	21	4412,-	**OE-fit**	B,D,M
			8x19	48	Image Motion	50	53	5	2532,-	**OE-fit**	B,D
			8x19	49	Image Motion G.Gun	50	53	5	2532,-	**OE-fit**	B,D
			8,5x19	9	Nitro Sabre G.Blk	47	53	11	4292,-	**OE-fit**	B,D,M
			8,5x19	41	Image Thor	47	53	11	3048,-		D,M
			8x20	2	Nitro Sapphire FF	50	53	5	5096,-	**OE-fit**	B,D
			8x20	3	Nitro Turismo FF	45	53	15	4812,-	**OE-fit**	B,D
			8x20	4	Nitro Turismo FF G.Gun/Pol	45	53	15	4964,-	**OE-fit**	B,D
			8,5x20	2	Nitro Sapphire FF	47	53	11	5216,-	**OE-fit**	B,D,M
			8,5x20	9	Nitro Sabre G.Blk	47	53	11	4800,-	**OE-fit**	B,D,M
FORD				PCD: **5-108** Bolt - Mutter: **12x1,50** CB: **63,4**							
Focus (DA3) RS	03.09-09.11	18-20	8x18	2	Nitro Sapphire FF	42	60	36	4036,-	**OE-fit**	B,D
			8x18	9	Nitro Sabre G.Blk	47	60	26	3496,-	**OE-fit**	B,D
			8x18	11	Nitro Demon	48	60	24	2784,-		D
			8x18	16	Advanti Inizio DST	42	60	36	3828,-	**OE-fit**	B,D
			8x18	17	BM Drive M.Gun	48	60	24	2296,-		D
			8x18	36	Image Colt	47	60	26	2412,-	**OE-fit**	B,D
			8x18	46	Image Stella	42	60	36	2276,-	**OE-fit**	B,D
			8x18	47	Image Stella M.Blk	42	60	36	2276,-	**OE-fit**	B,D
			8x18	48	Image Motion	50	60	20	2204,-	**OE-fit**	B,D
			8x18	49	Image Motion G.Gun	50	60	20	2204,-	**OE-fit**	B,D
			8x18	50	Image Legend	50	60	20	2276,-	**OE-fit**	B,D
			8x18	92	Image Colt L.Gun	47	60	26	2296,-	**OE-fit**	B,D
			8x19	2	Nitro Sapphire FF	42	60	36	4684,-	**OE-fit**	B,D
			8x19	10	Nitro Demon H.Slv	48	60	24	3624,-		D
			8x19	11	Nitro Demon	48	60	24	3376,-		D
			8x19	16	Advanti Inizio DST	42	60	36	4412,-	**OE-fit**	B,D
			8x19	48	Image Motion	50	60	20	2532,-	**OE-fit**	B,D
			8x19	49	Image Motion G.Gun	50	60	20	2532,-	**OE-fit**	B,D
			8,5x19	3	Nitro Turismo FF	45	60	30	4492,-	**OE-fit**	B,D
			8,5x19	4	Nitro Turismo FF G.Gun/Pol	45	60	30	4644,-	**OE-fit**	B,D
			8,5x19	9	Nitro Sabre G.Blk	47	60	26	4292,-	**OE-fit**	B,D
			8,5x19	36	Image Colt	47	60	26	3028,-	**OE-fit**	B,D
			8,5x19	92	Image Colt L.Gun	47	60	26	2876,-	**OE-fit**	B,D
			8x20	2	Nitro Sapphire FF	45	60	30	5096,-	**OE-fit**	B,D
			8,5x20	2	Nitro Sapphire FF	47	60	26	5216,-	**OE-fit**	B,D
			8,5x20	3	Nitro Turismo FF	45	60	30	4812,-	**OE-fit**	B,D
			8,5x20	4	Nitro Turismo FF G.Gun/Pol	45	60	30	4964,-	**OE-fit**	B,D
			8,5x20	9	Nitro Sabre G.Blk	47	60	26	4800,-	**OE-fit**	B,D
			8,5x20	10	Nitro Demon H.Slv	45	60	30	4104,-		D
			8,5x20	11	Nitro Demon	45	60	30	3808,-		D
			8,5x20	36	Image Colt	47	60	26	3432,-	**OE-fit**	B,D
			8,5x20	92	Image Colt L.Gun	47	60	26	3276,-	**OE-fit**	B,D
			9x20	15	Nitro Magnum	45	60	30	4572,-		D,M
FORD				PCD: **5-108** Bolt - Mutter: **12x1,50** CB: **63,4**							
Puma (J2K)	01.20-	16-20	6,5x16	36	Image Colt	45	48	5	1624,-	**OE-fit**	B,D
			6,5x16	92	Image Colt L.Gun	45	48	5	1548,-	**OE-fit**	B,D
			7x16	17	BM Drive M.Gun	40	48	15	1476,-		B
			7x16	40	Image Spirit	45	48	5	1264,-	**OE-fit**	B,D
			7x16	46	Image Stella	40	48	15	1548,-		B
			7x16	47	Image Stella M.Blk	40	48	15	1548,-		B
			7x16	48	Image Motion	40	48	15	1468,-		B
			7x16	49	Image Motion G.Gun	40	48	15	1468,-		B
			7x16	50	Image Legend	40	48	15	1544,-		B
			7x17	40	Image Spirit	42	48	11	1476,-		B
			7x17	46	Image Stella	40	48	15	1812,-	**OE-fit**	B,D
			7x17	47	Image Stella M.Blk	40	48	15	1812,-	**OE-fit**	B,D
			7x17	48	Image Motion	40	48	15	1736,-	**OE-fit**	B,D
			7x17	49	Image Motion G.Gun	40	48	15	1736,-	**OE-fit**	B,D
			7,5x17	9	Nitro Sabre G.Blk	45	48	5	3052,-	**OE-fit**	B,D
			7,5x17	36	Image Colt	47	48	1	1956,-	**OE-fit**	B,D
			7,5x17	46	Image Stella	42	48	11	1812,-	**OE-fit**	B,D
			7,5x17	47	Image Stella M.Blk	42	48	11	1812,-	**OE-fit**	B,D
			7,5x17	50	Image Legend	45	48	5	1812,-	**OE-fit**	B,D
			7,5x17	92	Image Colt L.Gun	47	48	1	1876,-	**OE-fit**	B,D
			8x18	7	Nitro Spark G.Blk/Grey	47	48	1	3476,-	**OE-fit**	B,D
			8x18	8	Nitro Spark G.Blk/Red	45	48	5	3476,-		B
			8x18	9	Nitro Sabre G.Blk	47	48	1	3496,-	**OE-fit**	B,D
			8x18	36	Image Colt	47	48	1	2412,-	**OE-fit**	B,D
			8x18	92	Image Colt L.Gun	47	48	1	2296,-	**OE-fit**	B,D
			8,5x19	3	Nitro Turismo FF	45	48	5	4492,-	**OE-fit**	B,D,M
			8,5x19	4	Nitro Turismo FF G.Gun/Pol	45	48	5	4644,-	**OE-fit**	B,D,M
			8,5x19	5	Nitro Volcano G.Gun	45	48	5	4388,-	**OE-fit**	B,D,M
			8,5x19	6	Nitro Volcano	45	48	5	4632,-	**OE-fit**	B,D,M
			8,5x19	9	Nitro Sabre G.Blk	47	48	1	4292,-	**OE-fit**	B,D,M
			8,5x19	36	Image Colt	47	48	1	3028,-	**OE-fit**	B,D,M
			8,5x19	92	Image Colt L.Gun	47	48	1	2876,-	**OE-fit**	B,D,M
			8x20	2	Nitro Sapphire FF	45	48	5	5096,-	**OE-fit**	B,D
			8x20	3	Nitro Turismo FF	45	48	5	4812,-	**OE-fit**	B,D
			8x20	4	Nitro Turismo FF G.Gun/Pol	45	48	5	4964,-	**OE-fit**	B,D
			8,5x20	2	Nitro Sapphire FF	47	48	1	5216,-	**OE-fit**	B,D,M
			8,5x20	3	Nitro Turismo FF	45	48	5	4812,-	**OE-fit**	B,D,M
			8,5x20	4	Nitro Turismo FF G.Gun/Pol	45	48	5	4964,-	**OE-fit**	B,D,M

Forts. neste side »

Bilmerke - Bilmodell	Årsmodell	Dimensjon	Felgdim.	Bilde	Felgmodell	ET Felg	ET Bil	Avvik ET	Veil. Pris eks. MVA	Merknader	B,C D, M
FORD (forts.)			PCD: **5-108** Bolt - Mutter: **12x1,50** CB: **63,4**								
			8,5x20	5	Nitro Volcano G.Gun	45	48	5	4824,-	**OE-fit**	B,D,M
			8,5x20	6	Nitro Volcano	45	48	5	5164,-	**OE-fit**	B,D,M
			8,5x20	7	Nitro Spark G.Blk/Grey	47	48	1	4660,-	**OE-fit**	B,D,M
			8,5x20	8	Nitro Spark G.Blk/Red	45	48	5	4660,-		B,M
			8,5x20	9	Nitro Sabre G.Blk	47	48	1	4800,-	**OE-fit**	B,D,M
			8,5x20	36	Image Colt	47	48	1	3432,-	**OE-fit**	B,D,M
			8,5x20	92	Image Colt L.Gun	47	48	1	3276,-	**OE-fit**	B,D,M
FORD			PCD: **5-108** Bolt - Mutter: **12x1,50** CB: **63,4**								
C-Max (DXA)	10.10-03.19	16-20	6,5x16	36	Image Colt	45	50	10	1624,-	**OE-fit**	B,D
Escape	04.12-	17-20	6,5x16	92	Image Colt L.Gun	45	50	10	1548,-	**OE-fit**	B,D
Focus (DEH)	06.18-	16-20	7x16	17	BM Drive M.Gun	50	50	0	1476,-		D
Focus (DYB)	03.11-05.18	16-20	7x16	40	Image Spirit	45	50	10	1264,-	**OE-fit**	B,D
(Även ST)			7x16	46	Image Stella	50	50	0	1548,-	**OE-fit**	B,D
Grand C-Max (DXA)	10.10-	16-20	7x16	47	Image Stella M.Blk	50	50	0	1548,-	**OE-fit**	B,D
Kuga (DFK)	02.20-	17-21	7x16	48	Image Motion	50	50	0	1468,-	**OE-fit**	B,D
Kuga (DM2)	06.08-12.12	16-20	7x16	49	Image Motion G.Gun	50	50	0	1468,-	**OE-fit**	B,D
Kuga (DM2)	01.13-09.15	16-20	7x16	50	Image Legend	50	50	0	1544,-	**OE-fit**	B,D
Kuga (DM2)	10.15-01.20	17-20	7,5x17	9	Nitro Sabre G.Blk	45	50	10	3052,-	**OE-fit**	B,D
(Facelift)			7,5x17	22	ATS Evolution	50	50	0	2268,-	**OE-fit**	B,D
Mondeo (BA7)	06.07-09.14	16-20	7,5x17	23	ATS Evolution G.Grey	50	50	0	2340,-		D
Mondeo (BA7)	10.14-	16-20	7,5x17	36	Image Colt	47	50	6	1956,-	**OE-fit**	B,D
Mondeo sedan	12.00-06.03	16-20	7,5x17	46	Image Stella	50	50	0	1812,-	**OE-fit**	B,D
Mondeo sedan	07.03-06.07	16-20	7,5x17	47	Image Stella M.Blk	50	50	0	1812,-	**OE-fit**	B,D
(Facelift)			7,5x17	50	Image Legend	45	50	10	1812,-	**OE-fit**	B,D
Mondeo turnier	12.00-06.03	16-20	7,5x17	92	Image Colt L.Gun	47	50	6	1876,-	**OE-fit**	B,D
Mondeo turnier	07.03-06.07	16-20	8x17	17	BM Drive M.Gun	48	50	4	1736,-		D
(Facelift)			8x17	40	Image Spirit	42	50	16	1476,-	**OE-fit**	B,D
Tourneo Connect	07.13-04.18	16-20	8x17	48	Image Motion	50	50	0	1736,-	**OE-fit**	B,D
Tourneo Connect	05.18-	16-20	8x17	49	Image Motion G.Gun	50	50	0	1736,-	**OE-fit**	B,D
Transit Connect	07.13-04.18	16-20	7,5x18	2	Nitro Sapphire FF	50	50	0	3944,-	**OE-fit**	B,D
Transit Connect	05.18-	16-20	7,5x18	22	ATS Evolution	50	50	0	3016,-	**OE-fit**	B,D
			7,5x18	23	ATS Evolution G.Grey	50	50	0	3116,-		D
			7,5x18	46	Image Stella	50	50	0	2276,-	**OE-fit**	B,D
			7,5x18	47	Image Stella M.Blk	50	50	0	2276,-	**OE-fit**	B,D
			8x18	7	Nitro Spark G.Blk/Grey	47	50	6	3476,-	**OE-fit**	B,D
			8x18	8	Nitro Spark G.Blk/Red	45	50	10	3476,-		B
			8x18	9	Nitro Sabre G.Blk	47	50	6	3496,-	**OE-fit**	B,D
			8x18	10	Nitro Demon H.Slv	48	50	4	2972,-		D
			8x18	11	Nitro Demon	48	50	4	2784,-		D
			8x18	16	Advanti Inizio DST	42	50	16	3828,-	**OE-fit**	B,D
			8x18	17	BM Drive M.Gun	48	50	4	2296,-		D
			8x18	36	Image Colt	47	50	6	2412,-	**OE-fit**	B,D
			8x18	40	Image Spirit	42	50	16	1912,-	**OE-fit**	B,D
			8x18	41	Image Thor	42	50	16	2412,-		D
			8x18	48	Image Motion	50	50	0	2204,-	**OE-fit**	B,D
			8x18	49	Image Motion G.Gun	50	50	0	2204,-	**OE-fit**	B,D
			8x18	50	Image Legend	50	50	0	2276,-	**OE-fit**	B,D
			8x18	92	Image Colt L.Gun	47	50	6	2296,-	**OE-fit**	B,D
			7,5x19	2	Nitro Sapphire FF	50	50	0	4572,-	**OE-fit**	B,D
			8x19	3	Nitro Turismo FF	50	50	0	4492,-	**OE-fit**	B,D
			8x19	4	Nitro Turismo FF G.Gun/Pol	50	50	0	4644,-	**OE-fit**	B,D
			8x19	10	Nitro Demon H.Slv	48	50	4	3624,-		D
			8x19	11	Nitro Demon	48	50	4	3376,-		D
			8x19	16	Advanti Inizio DST	42	50	16	4412,-	**OE-fit**	B,D
			8x19	48	Image Motion	50	50	0	2532,-	**OE-fit**	B,D
			8x19	49	Image Motion G.Gun	50	50	0	2532,-	**OE-fit**	B,D
			8,5x19	3	Nitro Turismo FF	45	50	10	4492,-	**OE-fit**	B,D,M
			8,5x19	4	Nitro Turismo FF G.Gun/Pol	45	50	10	4644,-	**OE-fit**	B,D
			8,5x19	5	Nitro Volcano G.Gun	45	50	10	4388,-	**OE-fit**	B,D
			8,5x19	6	Nitro Volcano	45	50	10	4632,-	**OE-fit**	B,D
			8,5x19	9	Nitro Sabre G.Blk	47	50	6	4292,-	**OE-fit**	B,D
			8,5x19	36	Image Colt	47	50	6	3028,-	**OE-fit**	B,D,M
			8,5x19	41	Image Thor	47	50	6	3048,-		D
			8,5x19	92	Image Colt L.Gun	47	50	6	2876,-	**OE-fit**	B,D,M
			8x20	2	Nitro Sapphire FF	50	50	0	5096,-	**OE-fit**	B,D
			8x20	3	Nitro Turismo FF	50	50	0	4812,-	**OE-fit**	B,D
			8x20	4	Nitro Turismo FF G.Gun/Pol	50	50	0	4964,-	**OE-fit**	B,D
			8,5x20	1	Nitro Throne FF	40	50	20	5060,-	**OE-fit**	B,D,M
			8,5x20	2	Nitro Sapphire FF	47	50	6	5216,-	**OE-fit**	B,D
			8,5x20	3	Nitro Turismo FF	45	50	10	4812,-	**OE-fit**	B,D,M
			8,5x20	4	Nitro Turismo FF G.Gun/Pol	45	50	10	4964,-	**OE-fit**	B,D
			8,5x20	5	Nitro Volcano G.Gun	45	50	10	4824,-	**OE-fit**	B,D,M
			8,5x20	6	Nitro Volcano	45	50	10	5164,-	**OE-fit**	B,D,M
			8,5x20	7	Nitro Spark G.Blk/Grey	47	50	6	4660,-	**OE-fit**	B,D,M
			8,5x20	8	Nitro Spark G.Blk/Red	45	50	10	4660,-		B,M
			8,5x20	9	Nitro Sabre G.Blk	47	50	6	4800,-	**OE-fit**	B,D
			8,5x20	10	Nitro Demon H.Slv	45	50	10	4104,-		D,M
			8,5x20	11	Nitro Demon	45	50	10	3808,-		D,M
			8,5x20	36	Image Colt	47	50	6	3432,-	**OE-fit**	B,D,M
			8,5x20	92	Image Colt L.Gun	47	50	6	3276,-	**OE-fit**	B,D,M
			9x20	15	Nitro Magnum	45	50	10	4572,-		D,M

Bilmerke - Bilmodell	Årsmodell	Dimensjon	Felgdim.	Bilde	Felgmodell	ET Felg	ET Bil	Avvik ET	Veil. Pris eks. MVA	Merknader	B,C D, M
FORD				PCD: **5-108** Bolt - Mutter: **12x1,50** CB: **63,4**							
Focus (DEH) ST	06.19-	17-20	7,5x17	9	Nitro Sabre G.Blk	45	55	20	3052,-	**OE-fit**	B,D
			7,5x17	36	Image Colt	47	55	16	1956,-	**OE-fit**	B,D
			7,5x17	46	Image Stella	50	55	10	1812,-	**OE-fit**	B,D
			7,5x17	47	Image Stella M.Blk	50	55	10	1812,-	**OE-fit**	B,D
			7,5x17	50	Image Legend	45	55	20	1812,-	**OE-fit**	B,D
			7,5x17	92	Image Colt L.Gun	47	55	16	1876,-	**OE-fit**	B,D
			7,5x18	2	Nitro Sapphire FF	50	55	10	3944,-	**OE-fit**	B,D
			8x18	7	Nitro Spark G.Blk/Grey	47	55	16	3476,-	**OE-fit**	B,D
			8x18	9	Nitro Sabre G.Blk	47	55	16	3496,-	**OE-fit**	B,D
			8x18	10	Nitro Demon H.Slv	48	55	14	2972,-	**OE-fit**	B,D
			8x18	11	Nitro Demon	48	55	14	2784,-	**OE-fit**	B,D
			8x18	16	Advanti Inizio DST	42	55	26	3828,-	**OE-fit**	B,D
			8x18	17	BM Drive M.Gun	48	55	14	2296,-	**OE-fit**	B,D
			8x18	36	Image Colt	47	55	16	2412,-	**OE-fit**	B,D
			8x18	48	Image Motion	50	55	10	2204,-	**OE-fit**	B,D
			8x18	49	Image Motion G.Gun	50	55	10	2204,-	**OE-fit**	B,D
			8x18	92	Image Colt L.Gun	47	55	16	2296,-	**OE-fit**	B,D
			7,5x19	2	Nitro Sapphire FF	50	55	10	4572,-	**OE-fit**	B,D
			8x19	3	Nitro Turismo FF	50	55	10	4492,-	**OE-fit**	B,D
			8x19	4	Nitro Turismo FF G.Gun/Pol	50	55	10	4644,-	**OE-fit**	B,D
			8x19	10	Nitro Demon H.Slv	48	55	14	3624,-	**OE-fit**	B,D
			8x19	11	Nitro Demon	48	55	14	3376,-	**OE-fit**	B,D
			8x19	16	Advanti Inizio DST	42	55	26	4412,-	**OE-fit**	B,D
			8x19	48	Image Motion	50	55	10	2532,-	**OE-fit**	B,D
			8x19	49	Image Motion G.Gun	50	55	10	2532,-	**OE-fit**	B,D
			8,5x19	3	Nitro Turismo FF	45	55	20	4492,-	**OE-fit**	B,D
			8,5x19	4	Nitro Turismo FF G.Gun/Pol	45	55	20	4644,-	**OE-fit**	B,D
			8,5x19	5	Nitro Volcano G.Gun	45	55	20	4388,-	**OE-fit**	B,D
			8,5x19	6	Nitro Volcano	45	55	20	4632,-	**OE-fit**	B,D
			8,5x19	9	Nitro Sabre G.Blk	47	55	16	4292,-	**OE-fit**	B,D
			8,5x19	36	Image Colt	47	55	16	3028,-	**OE-fit**	B,D
			8,5x19	92	Image Colt L.Gun	47	55	16	2876,-	**OE-fit**	B,D
			8x20	2	Nitro Sapphire FF	50	55	10	5096,-	**OE-fit**	B,D
			8x20	3	Nitro Turismo FF	45	55	20	4812,-	**OE-fit**	B,D
			8x20	4	Nitro Turismo FF G.Gun/Pol	45	55	20	4964,-	**OE-fit**	B,D
			8,5x20	2	Nitro Sapphire FF	47	55	16	5216,-	**OE-fit**	B,D
			8,5x20	3	Nitro Turismo FF	45	55	20	4812,-	**OE-fit**	B,D
			8,5x20	4	Nitro Turismo FF G.Gun/Pol	45	55	20	4964,-	**OE-fit**	B,D
			8,5x20	5	Nitro Volcano G.Gun	45	55	20	4824,-	**OE-fit**	B,D
			8,5x20	6	Nitro Volcano	45	55	20	5164,-	**OE-fit**	B,D
			8,5x20	7	Nitro Spark G.Blk/Grey	47	55	16	4660,-	**OE-fit**	B,D,M
			8,5x20	9	Nitro Sabre G.Blk	47	55	16	4800,-	**OE-fit**	B,D
			8,5x20	10	Nitro Demon H.Slv	45	55	20	4104,-	**OE-fit**	B,D
			8,5x20	11	Nitro Demon	45	55	20	3808,-	**OE-fit**	B,D
			8,5x20	36	Image Colt	47	55	16	3432,-	**OE-fit**	B,D
			8,5x20	92	Image Colt L.Gun	47	55	16	3276,-	**OE-fit**	B,D
FORD				PCD: **5-108** Bolt - Mutter: **12x1,50** CB: **63,4**							
Focus (DYB) RS	01.16-12.18	18-20	8x18	2	Nitro Sapphire FF	42	50	16	4036,-	**OE-fit**	B,D
			8x18	9	Nitro Sabre G.Blk	47	50	6	3496,-	**OE-fit**	B,D
			8x18	10	Nitro Demon H.Slv	48	50	4	2972,-		D
			8x18	11	Nitro Demon	48	50	4	2784,-		D
			8x18	16	Advanti Inizio DST	42	50	16	3828,-	**OE-fit**	B,D
			8x18	17	BM Drive M.Gun	48	50	4	2296,-		D
			8x18	22	ATS Evolution	42	50	16	3016,-	**OE-fit**	B,D
			8x18	23	ATS Evolution G.Grey	42	50	16	3116,-	**OE-fit**	B,D
			8x18	36	Image Colt	47	50	6	2412,-	**OE-fit**	B,D
			8x18	46	Image Stella	42	50	16	2276,-	**OE-fit**	B,D
			8x18	47	Image Stella M.Blk	42	50	16	2276,-	**OE-fit**	B,D
			8x18	48	Image Motion	50	50	0	2204,-	**OE-fit**	B,D
			8x18	49	Image Motion G.Gun	50	50	0	2204,-	**OE-fit**	B,D
			8x18	50	Image Legend	50	50	0	2276,-	**OE-fit**	B,D
			8x18	92	Image Colt L.Gun	47	50	6	2296,-	**OE-fit**	B,D
			8x19	2	Nitro Sapphire FF	42	50	16	4684,-	**OE-fit**	B,D
			8x19	10	Nitro Demon H.Slv	48	50	4	3624,-		D
			8x19	11	Nitro Demon	48	50	4	3376,-		D
			8x19	16	Advanti Inizio DST	42	50	16	4412,-	**OE-fit**	B,D
			8x19	48	Image Motion	50	50	0	2532,-	**OE-fit**	B,D
			8x19	49	Image Motion G.Gun	50	50	0	2532,-	**OE-fit**	B,D
			8,5x19	3	Nitro Turismo FF	45	50	10	4492,-	**OE-fit**	B,D
			8,5x19	4	Nitro Turismo FF G.Gun/Pol	45	50	10	4644,-	**OE-fit**	B,D
			8,5x19	9	Nitro Sabre G.Blk	47	50	6	4292,-	**OE-fit**	B,D
			8,5x19	36	Image Colt	47	50	6	3028,-	**OE-fit**	B,D
			8,5x19	92	Image Colt L.Gun	47	50	6	2876,-	**OE-fit**	B,D
			8x20	2	Nitro Sapphire FF	45	50	10	5096,-	**OE-fit**	B,D
			8,5x20	2	Nitro Sapphire FF	47	50	6	5216,-	**OE-fit**	B,D
			8,5x20	3	Nitro Turismo FF	45	50	10	4812,-	**OE-fit**	B,D
			8,5x20	4	Nitro Turismo FF G.Gun/Pol	45	50	10	4964,-	**OE-fit**	B,D
			8,5x20	9	Nitro Sabre G.Blk	47	50	6	4800,-	**OE-fit**	B,D
			8,5x20	10	Nitro Demon H.Slv	45	50	10	4104,-		D
			8,5x20	11	Nitro Demon	45	50	10	3808,-		D
			8,5x20	36	Image Colt	47	50	6	3432,-	**OE-fit**	B,D
			8,5x20	92	Image Colt L.Gun	47	50	6	3276,-	**OE-fit**	B,D
			9x20	15	Nitro Magnum	45	50	10	4572,-		D,M

Bilmerke - Bilmodell	Årsmodell	Dimensjon	Felgdim.	Bilde	Felgmodell	ET Felg	ET Bil	Avvik ET	Veil. Pris eks. MVA	Merknader	B,C D, M
FORD			PCD: **5-108** Bolt - Mutter: **14x1,50** CB: **63,4**								
Edge (SBF)	03.15-	18-22	6,5x16	36	Image Colt	45	50	10	1624,-	**OE-fit**	B,D
Galaxy (WA6)	07.06-06.15	16-20	6,5x16	92	Image Colt L.Gun	45	50	10	1548,-	**OE-fit**	B,D
Galaxy (WA6)	07.15-	17-21	7x16	17	BM Drive M.Gun	50	50	0	1476,-		D
S-Max (WA6)	06.06-06.15	16-20	7x16	40	Image Spirit	45	50	10	1264,-	**OE-fit**	B,D
S-Max (WA6)	07.15-	17-21	7x16	46	Image Stella	50	50	0	1548,-	**OE-fit**	B,D
			7x16	47	Image Stella M.Blk	50	50	0	1548,-	**OE-fit**	B,D
			7x16	48	Image Motion	50	50	0	1468,-	**OE-fit**	B,D
			7x16	49	Image Motion G.Gun	50	50	0	1468,-	**OE-fit**	B,D
			7x16	50	Image Legend	50	50	0	1544,-	**OE-fit**	B,D
			7,5x17	9	Nitro Sabre G.Blk	45	50	10	3052,-	**OE-fit**	B,D
			7,5x17	22	ATS Evolution	50	50	0	2268,-	**OE-fit**	B,D
			7,5x17	23	ATS Evolution G.Grey	50	50	0	2340,-		D
			7,5x17	36	Image Colt	47	50	6	1956,-	**OE-fit**	B,D
			7,5x17	46	Image Stella	50	50	0	1812,-	**OE-fit**	B,D
			7,5x17	47	Image Stella M.Blk	50	50	0	1812,-	**OE-fit**	B,D
			7,5x17	50	Image Legend	45	50	10	1812,-	**OE-fit**	B,D
			7,5x17	92	Image Colt L.Gun	47	50	6	1876,-	**OE-fit**	B,D
			8x17	17	BM Drive M.Gun	48	50	4	1736,-		D
			8x17	40	Image Spirit	42	50	16	1476,-	**OE-fit**	B,D
			8x17	48	Image Motion	50	50	0	1736,-	**OE-fit**	B,D
			8x17	49	Image Motion G.Gun	50	50	0	1736,-	**OE-fit**	B,D
			7,5x18	2	Nitro Sapphire FF	50	50	0	3944,-	**OE-fit**	B,D
			7,5x18	22	ATS Evolution	50	50	0	3016,-	**OE-fit**	B,D
			7,5x18	23	ATS Evolution G.Grey	50	50	0	3116,-		D
			7,5x18	46	Image Stella	50	50	0	2276,-	**OE-fit**	B,D
			7,5x18	47	Image Stella M.Blk	50	50	0	2276,-	**OE-fit**	B,D
			8x18	7	Nitro Spark G.Blk/Grey	47	50	6	3476,-	**OE-fit**	B,D
			8x18	8	Nitro Spark G.Blk/Red	45	50	10	3476,-		B
			8x18	9	Nitro Sabre G.Blk	47	50	6	3496,-	**OE-fit**	B,D
			8x18	10	Nitro Demon H.Slv	48	50	4	2972,-		D
			8x18	11	Nitro Demon	48	50	4	2784,-		D
			8x18	16	Advanti Inizio DST	42	50	16	3828,-	**OE-fit**	B,D
			8x18	17	BM Drive M.Gun	48	50	4	2296,-		D
			8x18	36	Image Colt	47	50	6	2412,-	**OE-fit**	B,D
			8x18	40	Image Spirit	42	50	16	1912,-	**OE-fit**	B,D
			8x18	41	Image Thor	42	50	16	2412,-		D
			8x18	48	Image Motion	50	50	0	2204,-	**OE-fit**	B,D
			8x18	49	Image Motion G.Gun	50	50	0	2204,-	**OE-fit**	B,D
			8x18	50	Image Legend	50	50	0	2276,-	**OE-fit**	B,D
			8x18	92	Image Colt L.Gun	47	50	6	2296,-	**OE-fit**	B,D
			7,5x19	2	Nitro Sapphire FF	50	50	0	4572,-	**OE-fit**	B,D
			8x19	3	Nitro Turismo FF	50	50	0	4492,-	**OE-fit**	B,D
			8x19	4	Nitro Turismo FF G.Gun/Pol	50	50	0	4644,-	**OE-fit**	B,D
			8x19	10	Nitro Demon H.Slv	48	50	4	3624,-		D
			8x19	11	Nitro Demon	48	50	4	3376,-		D
			8x19	16	Advanti Inizio DST	42	50	16	4412,-	**OE-fit**	B,D
			8x19	48	Image Motion	50	50	0	2532,-	**OE-fit**	B,D
			8x19	49	Image Motion G.Gun	50	50	0	2532,-	**OE-fit**	B,D
			8,5x19	3	Nitro Turismo FF	45	50	10	4492,-	**OE-fit**	B,D,M
			8,5x19	4	Nitro Turismo FF G.Gun/Pol	45	50	10	4644,-	**OE-fit**	B,D
			8,5x19	5	Nitro Volcano G.Gun	45	50	10	4388,-	**OE-fit**	B,D
			8,5x19	6	Nitro Volcano	45	50	10	4632,-	**OE-fit**	B,D
			8,5x19	9	Nitro Sabre G.Blk	47	50	6	4292,-	**OE-fit**	B,D
			8,5x19	36	Image Colt	47	50	6	3028,-	**OE-fit**	B,D,M
			8,5x19	41	Image Thor	47	50	6	3048,-		D
			8,5x19	92	Image Colt L.Gun	47	50	6	2876,-	**OE-fit**	B,D,M
			8x20	2	Nitro Sapphire FF	50	50	0	5096,-	**OE-fit**	B,D
			8x20	3	Nitro Turismo FF	45	50	10	4812,-	**OE-fit**	B,D
			8x20	4	Nitro Turismo FF G.Gun/Pol	45	50	10	4964,-	**OE-fit**	B,D
			8,5x20	1	Nitro Throne FF	40	50	20	5060,-	**OE-fit**	B,D,M
			8,5x20	2	Nitro Sapphire FF	47	50	6	5216,-	**OE-fit**	B,D
			8,5x20	3	Nitro Turismo FF	45	50	10	4812,-	**OE-fit**	B,D,M
			8,5x20	4	Nitro Turismo FF G.Gun/Pol	45	50	10	4964,-	**OE-fit**	B,D
			8,5x20	5	Nitro Volcano G.Gun	45	50	10	4824,-	**OE-fit**	B,D
			8,5x20	6	Nitro Volcano	45	50	10	5164,-	**OE-fit**	B,D
			8,5x20	7	Nitro Spark G.Blk/Grey	47	50	6	4660,-	**OE-fit**	B,D,M
			8,5x20	8	Nitro Spark G.Blk/Red	45	50	10	4660,-		B,M
			8,5x20	9	Nitro Sabre G.Blk	47	50	6	4800,-	**OE-fit**	B,D
			8,5x20	10	Nitro Demon H.Slv	45	50	10	4104,-		D,M
			8,5x20	11	Nitro Demon	45	50	10	3808,-		D,M
			8,5x20	36	Image Colt	47	50	6	3432,-	**OE-fit**	B,D,M
			8,5x20	92	Image Colt L.Gun	47	50	6	3276,-	**OE-fit**	B,D,M
			9x20	15	Nitro Magnum	45	50	10	4572,-		D,M
			9x21	5	Nitro Volcano G.Gun	45	50	10	5540,-	**OE-fit**	B,D,M
			9x21	6	Nitro Volcano	45	50	10	5996,-	**OE-fit**	B,D,M
			9x22	15	Nitro Magnum	45	50	10	5420,-	**OE-fit**	B,D,M
FORD			PCD: **5-112** Bolt - Mutter: **14x1,50B** CB: **57,1**								
Galaxy (WGR)	09.95-04.01	15-19	6,5x16	46	Image Stella	46	55	18	1548,-		D
Galaxy (WGR)	05.01-06.06	16-19	6,5x16	47	Image Stella M.Blk	46	55	18	1548,-		D
			8x18	7	Nitro Spark G.Blk/Grey	45	55	20	3476,-		
			8x18	8	Nitro Spark G.Blk/Red	45	55	20	3476,-		
			8x18	53	Nitro Hammer	48	55	14	3256,-		
			8,5x20	7	Nitro Spark G.Blk/Grey	45	55	20	4660,-		
			8,5x20	8	Nitro Spark G.Blk/Red	45	55	20	4660,-		
			8,5x20	53	Nitro Hammer	48	55	14	4268,-		

Bilmerke - Bilmodell	Årsmodell	Dimensjon	Felgdim.	Bilde	Felgmodell	ET Felg	ET Bil	Avvik ET	Veil. Pris eks. MVA	Merknader	B,C D, M
FORD				PCD: **5-114,3** Bolt - Mutter: **1/2"**	CB: **70,3**						
Mustang (S197)	01.05-07.14	16-22	7,5x17	36	Image Colt	35	45	20	1956,-		
Kun 4.0 V6 (157kW)			7,5x17	92	Image Colt L.Gun	35	45	20	1876,-		
kan ha 16".			8x18	7	Nitro Spark G.Blk/Grey	35	45	20	3476,-		
			8x18	8	Nitro Spark G.Blk/Red	35	45	20	3476,-		
			8x18	16	Advanti Inizio DST	35	45	20	3828,-		
			8x18	36	Image Colt	35	45	20	2412,-		
			8x18	92	Image Colt L.Gun	35	45	20	2296,-		
			8x19	11	Nitro Demon	38	45	14	3376,-		
			8,5x19	9	Nitro Sabre G.Blk	35	45	20	4292,-		
			8,5x19	36	Image Colt	35	45	20	3028,-		
			8,5x19	92	Image Colt L.Gun	35	45	20	2876,-		
			9x19	11	Nitro Demon	45	45	0	3376,-		
			8,5x20	7	Nitro Spark G.Blk/Grey	35	45	20	4660,-		
			8,5x20	8	Nitro Spark G.Blk/Red	35	45	20	4660,-		
			8,5x20	9	Nitro Sabre G.Blk	35	45	20	4800,-		
			8,5x20	11	Nitro Demon	38	45	14	3808,-		
			8,5x20	36	Image Colt	35	45	20	3432,-		
			8,5x20	92	Image Colt L.Gun	35	45	20	3276,-		
FORD				PCD: **5-114,3** Bolt - Mutter: **14x1,50**	CB: **70,5**						
Mustang (LAE)	08.14-	19-22	9x19	3	Nitro Turismo FF	45	45	0	4660,-		D
			9x19	11	Nitro Demon	45	45	0	3376,-		
			9,5x19	3	Nitro Turismo FF	50	53	5	4660,-	Kun bak	D
FORD				PCD: **5-160** Bolt - Mutter: **14x2**	CB: **65,1**						
Transit 2.0D	10.02-05.06	16-16	6x15	58	Image Strong	60	60	0	2116,-	Maks bel. 1200 kg	D
Transit FT260/280/300	01.01-05.06	15-16	6x15	59	Image Strong M.Gun	60	60	0	2116,-	Maks bel. 1200 kg	D
Transit FT80/100/120	09.91-12.99	14-15	6,5x16	58	Image Strong	60	60	0	2500,-	Maks bel. 1400 kg	D
Transit fwd	06.06-12.12	15-18	6,5x16	59	Image Strong M.Gun	60	60	0	2500,-	Maks bel. 1400 kg	D
2.2TDCi			6,5x17	58	Image Strong	60	60	0	2884,-	Maks bel. 1400 kg	D
Transit rwd	06.06-12.12	16-18	6,5x17	59	Image Strong M.Gun	60	60	0	2884,-	Maks bel. 1400 kg	D
2.2TDCi, 2.3i, 2.4TDCi			7,5x18	58	Image Strong	50	60	20	3524,-	Maks bel. 1400 kg	D,M
			7,5x18	59	Image Strong M.Gun	50	60	20	3524,-	Maks bel. 1400 kg	D,M
FORD				PCD: **5-160** Bolt - Mutter: **14x1,50**	CB: **65,1**						
Tourneo Custom 2.7t, 2.9t, 3.1t	01.13-	15-20	6x15	58	Image Strong	60	60	0	2116,-	Maks bel. 1200 kg	D
Tourneo Custom 3.3t, 3.5t	01.13-	16-20	6x15	59	Image Strong M.Gun	60	60	0	2116,-	Maks bel. 1200 kg	D
Transit 2.9t, 3.1t	03.14-	15-20	6,5x16	58	Image Strong	60	60	0	2500,-	Maks bel. 1400 kg	D
Transit 3.3t, 3.5t	03.14-	16-20	6,5x16	59	Image Strong M.Gun	60	60	0	2500,-	Maks bel. 1400 kg	D
Transit Custom	01.13-	15-20	6,5x17	58	Image Strong	60	60	0	2884,-	Maks bel. 1400 kg	D
2.7t, 2.9t, 3.1t			6,5x17	59	Image Strong M.Gun	60	60	0	2884,-	Maks bel. 1400 kg	D
Transit Custom 3.3t, 3.5t	01.13-	16-20	7,5x18	58	Image Strong	50	60	20	3524,-	Maks bel. 1400 kg	D,M
			7,5x18	59	Image Strong M.Gun	50	60	20	3524,-	Maks bel. 1400 kg	D,M
			8x18	53	Nitro Hammer HL	48	60	24	3508,-	Maks bel. 1000 kg	D
			8,5x20	53	Nitro Hammer HL	50	60	20	4468,-		D,M
FORD				PCD: **5-114,3** Bolt - Mutter: **14x1,50**	CB: **70,3**						
Explorer	05.19-	20-22	8x20	2	Nitro Sapphire FF	35	44	18	5096,-		
			8,5x20	1	Nitro Throne FF	40	44	8	5060,-		
FORD				PCD: **6-139,7** Bolt - Mutter: **12x1,50**	CB: **93,1**						
Ranger	99-12.06	15-20	7x16	68	BM Macho	25	30	10	2396,-		
(Thailand tillverkad)			7x16	69	BM Macho M.Blk	25	30	10	2396,-		
Ranger (2AW)	01.07-10.11	15-24	8x16	78	Advanti Peak	5	30	50	2692,-		
3.0TDCi 16"			7,5x17	68	BM Macho	25	30	10	2756,-		
(Thailand tillverkad)			7,5x17	69	BM Macho M.Blk	25	30	10	2756,-		
			9x17	74	Ballistic Morax	12	30	36	4020,-		M
			8x18	68	BM Macho	20	30	20	3300,-		
			8x18	69	BM Macho M.Blk	20	30	20	3300,-		
			9x18	74	Ballistic Morax	12	30	36	4276,-		M
			9x20	68	BM Macho	20	30	20	4288,-		
			9x20	69	BM Macho M.Blk	20	30	20	4288,-		
			9x20	72	Ballistic Dakota	25	30	10	4624,-		
			9x20	74	Ballistic Morax	12	30	36	4740,-		M
			9x22	72	Ballistic Dakota	25	30	10	5128,-		
FORD				PCD: **6-139,7** Bolt - Mutter: **12x1,50**	CB: **93,1**						
Ranger (2AB)	11.11-01.19	16-24	7x16	68	BM Macho	50	55	10	2396,-		D
3.2TDCi 17"			7x16	69	BM Macho M.Blk	50	55	10	2396,-		D
Ranger (2AB)	02.19-	16-22	7,5x17	67	Image Rock	50	55	10	2796,-		D
2.0 (157kW) 17"			7,5x17	68	BM Macho	50	55	10	2756,-		D
Ranger (2AB) Raptor	02.19-	17-24	7,5x17	69	BM Macho M.Blk	50	55	10	2756,-		D
			7,5x18	67	Image Rock	50	55	10	3324,-		D
			8x18	68	BM Macho	50	55	10	3300,-		D
			8x18	69	BM Macho M.Blk	50	55	10	3300,-		D
			9x20	68	BM Macho	50	55	10	4288,-		D
			9x20	69	BM Macho M.Blk	50	55	10	4288,-		D
			9x20	72	Ballistic Dakota	48	55	14	4624,-		D
			9x22	72	Ballistic Dakota	48	55	14	5128,-		D
FORD				PCD: **6-135** Bolt - Mutter: **14x2**	CB: **87,1**						
Expedition	01.05-	17-26	8x18	68	BM Macho	40	44	8	3300,-		D
F-150	01.04-12.08	17-26	8x18	69	BM Macho M.Blk	40	44	8	3300,-		D
F-150	01.09-12.14	17-26	9x20	69	BM Macho M.Blk	40	44	8	4288,-		D
			9x20	72	Ballistic Dakota	38	44	12	4624,-		D
			9x22	72	Ballistic Dakota	38	44	12	5128,-		D
FORD				PCD: **6-135** Bolt - Mutter: **14x1,50**	CB: **87,1**						
F-150	01.15-	17-26	8x18	68	BM Macho	40	44	8	3300,-		D
			8x18	69	BM Macho M.Blk	40	44	8	3300,-		D
			9x20	69	BM Macho M.Blk	40	44	8	4288,-		D
			9x20	72	Ballistic Dakota	38	44	12	4624,-		D
			9x22	72	Ballistic Dakota	38	44	12	5128,-		D

Bilmerke - Bilmodell	Årsmodell	Dimensjon	Felgdim.	Bilde	Felgmodell	ET Felg	ET Bil	Avvik ET	Veil. Pris eks. MVA	Merknader	B,C D, M
FORD				PCD: **8-170** Bolt - Mutter: **14x2** CB: **124,9**							
Excursion	99-12.05	16-26	9x17	74	Ballistic Morax	12	10	-4	4020,-		M
(07- mutter 14x1.50)			9x18	74	Ballistic Morax	12	10	-4	4276,-		M
F-250	97-06	16-26	9x20	74	Ballistic Morax	12	10	-4	4740,-		M
(07- mutter 14x1.50)											
F-350	97-06	16-26									
(07- mutter 14x1.50)											
Superduty	99-	16-26									
(07- mutter 14x1.50)											
FORD				PCD: **8-170** Bolt - Mutter: **14x1,50** CB: **125,5**							
F-250	07-	17-26	9x17	74	Ballistic Morax	12	25	26	4020,-		
F-350	07-	17-26	9x18	74	Ballistic Morax	12	25	26	4276,-		
			9x20	74	Ballistic Morax	12	25	26	4740,-		
FORD				PCD: **8-165** Bolt - Mutter: **9/16"** CB: **124,9**							
Pick-up 8-bult	-96	16-24	9x17	74	Ballistic Morax	12	0	-24	4020,-		M
Van 8-bult	-96	16-24	9x18	74	Ballistic Morax	12	0	-24	4276,-		M
			9x20	74	Ballistic Morax	12	0	-24	4740,-		M
GMC				PCD: **6-139,7** Bolt - Mutter: **12x1,50** CB: **99,5**							
Canyon	04-12.12	15-20	6x15	65	CSP Work	27	33	12	2196,-		
			7x16	68	BM Macho	25	33	16	2396,-		
			7x16	69	BM Macho M.Blk	25	33	16	2396,-		
			7,5x17	67	Image Rock	20	33	26	2796,-		
			7,5x17	68	BM Macho	25	33	16	2756,-		
			7,5x17	69	BM Macho M.Blk	25	33	16	2756,-		
			7,5x18	67	Image Rock	20	33	26	3324,-		
			8x18	68	BM Macho	20	33	26	3300,-		
			8x18	69	BM Macho M.Blk	20	33	26	3300,-		
			9x20	69	BM Macho M.Blk	20	33	26	4288,-		
GMC				PCD: **6-139,7** Bolt - Mutter: **14x1,50** CB: **78,1**							
Safari	03-	16-20	7x16	68	BM Macho	25	31	12	2396,-		
Sierra 1500	12.10-	17-26	7x16	69	BM Macho M.Blk	25	31	12	2396,-		
Sierra 2wd	99-11.10	16-26	8x16	78	Advanti Peak	5	31	52	2692,-		
Sierra 4wd	88-11.10	16-26	7,5x17	67	Image Rock	20	31	22	2796,-		
Yukon	94-05	16-26	7,5x17	68	BM Macho	25	31	12	2756,-		
Yukon (GMT900)	06-	17-26	7,5x17	69	BM Macho M.Blk	25	31	12	2756,-		
			9x17	74	Ballistic Morax	12	31	38	4020,-		
			7,5x18	67	Image Rock	20	31	22	3324,-		
			8x18	68	BM Macho	20	31	22	3300,-		
			8x18	69	BM Macho M.Blk	20	31	22	3300,-		
			9x18	74	Ballistic Morax	12	31	38	4276,-		
			9x20	68	BM Macho	20	31	22	4288,-		
			9x20	69	BM Macho M.Blk	20	31	22	4288,-		
			9x20	72	Ballistic Dakota	20	31	22	4624,-		D
			9x20	74	Ballistic Morax	12	31	38	4740,-		
			9x22	72	Ballistic Dakota	20	31	22	5128,-		D
GMC				PCD: **8-165** Bolt - Mutter: **14x1,50** CB: **117,0**							
Savanna 2500/3500	92-	16-24	9x17	74	Ballistic Morax	12	20	16	4020,-		M
			9x18	74	Ballistic Morax	12	20	16	4276,-		M
			9x20	74	Ballistic Morax	12	20	16	4740,-		M
GMC				PCD: **8-180** Bolt - Mutter: **14x1,50** CB: **124,0**							
Sierra 2500	12.10-	17-26	9x18	74	Ballistic Morax	12	44	64	4276,-		M
Sierra 3500	12.10-	17-26	9x20	74	Ballistic Morax	12	44	64	4740,-		M
HONDA				PCD: **4-100** Bolt - Mutter: **12x1,50** CB: **56,1**							
Accord	82-90	13-17	5x13	45	Image Ride	38	45	14	1336,-		
Civic	09.91-02.96	13-18	5,5x14	45	Image Ride	38	45	14	1392,-		
Civic	01.95-03.01	13-18	5,5x15	34	CSP 16	45	45	0	1228,-	**OE-fit**	B,D
Civic	04.01-02.06	14-19	6x15	19	ATS Streetrallye Slv	38	45	14	1960,-		
Concerto	03.91-12.94	14-17	6x15	37	Image Comet	45	45	0	1316,-	**OE-fit**	B,D
CRX	06.92-12.99	14-17	6x15	42	Image Brio	40	45	10	1304,-		
Jazz	02.02-10.08	14-18	6x15	45	Image Ride	38	45	14	1552,-		
Prelude	-92	13-17	6,5x16	19	ATS Streetrallye Slv	40	45	10	2240,-		
			6,5x16	34	CSP 16	40	45	10	1468,-		
			6,5x16	42	Image Brio	38	45	14	1524,-		
			7x17	42	Image Brio	40	45	10	1832,-		
HONDA				PCD: **4-100** Bolt - Mutter: **12x1,50** CB: **56,1**							
Insight (ZE2)	03.09-11.13	15-18	5,5x15	34	CSP 16	45	45	0	1228,-	**OE-fit**	B,D
Jazz	11.08-06.15	15-18	6x15	19	ATS Streetrallye Slv	45	45	0	1960,-		
Jazz (GK)	07.15-	15-18	6x15	37	Image Comet	45	45	0	1316,-	**OE-fit**	B,D
			6x15	42	Image Brio	40	45	10	1304,-		
			6x15	45	Image Ride	38	45	14	1552,-		
			6x16	19	ATS Streetrallye Slv	45	45	0	2240,-		
			6x16	37	Image Comet	40	45	10	1536,-		
			6x16	38	Image Comet Slv	40	45	10	1536,-		
			6,5x16	19	ATS Streetrallye Slv	40	45	10	2240,-		
			6,5x16	34	CSP 16	40	45	10	1468,-		
			6,5x16	42	Image Brio	38	45	14	1524,-		
			7x17	18	ATS Streetrallye Blk	45	45	0	3344,-		
			7x17	42	Image Brio	40	45	10	1832,-		
HONDA				PCD: **5-114,3** Bolt - Mutter: **12x1,50** CB: **64,1**							
Accord	01.03-05.08	16-20	6x15	48	Image Motion	45	55	20	1224,-		
Accord	06.08-06.15	16-20	6,5x16	34	CSP 16	50	55	10	1468,-	**OE-fit**	B,D
2.2i-DTEC (132kW) 17"			6,5x16	35	CSP 16 M.Gun	45	55	20	1468,-	**OE-fit**	B,D
2.4 17"			6,5x16	36	Image Colt	45	55	20	1624,-		
Accord coupe	08.98-05.01	15-19	6,5x16	40	Image Spirit	45	55	20	1264,-		
Civic	03.06-01.12	16-20	6,5x16	48	Image Motion	45	55	20	1468,-	**OE-fit**	B,D

Forts. neste side »

Bilmerke - Bilmodell	Årsmodell	Dimensjon	Felgdim.	Bilde	Felgmodell	ET Felg	ET Bil	Avvik ET	Veil. Pris eks. MVA	Merknader	B,C D, M
HONDA (forts.)				PCD: **5-114,3** Bolt - Mutter: **12x1,50** CB: **64,1**							
Civic hybrid	05.06-09.11	15-19	6,5x16	49	Image Motion G.Gun	45	55	20	1468,-		
Civic Type R	11.01-01.06	16-20	6,5x16	92	Image Colt L.Gun	45	55	20	1548,-		
Civic Type R	04.07-12.11	16-20	7x16	17	BM Drive M.Gun	45	55	20	1476,-	**OE-fit**	B,D
CR-Z	05.10-12.16	15-18	7x16	34	CSP 16	45	55	20	1468,-	**OE-fit**	B,D
HR-V (RU)	08.15-	16-20	7x16	35	CSP 16 M.Gun	45	55	20	1468,-	**OE-fit**	B,D
Integra Type R	01.98-12.01	15-19	7x16	46	Image Stella	45	55	20	1548,-	**OE-fit**	B,D
Legend	02.91-08.04	16-19	7x16	47	Image Stella M.Blk	45	55	20	1548,-	**OE-fit**	B,D
Prelude	02.97-12.00	16-19	7x16	50	Image Legend	45	55	20	1544,-	**OE-fit**	B,D
			7x17	17	BM Drive M.Gun	45	55	20	1736,-	**OE-fit**	B,D
			7x17	34	CSP 16	55	55	0	1836,-	**OE-fit**	B,D
			7x17	35	CSP 16 M.Gun	55	55	0	1836,-	**OE-fit**	B,D
			7x17	40	Image Spirit	45	55	20	1476,-		
			7x17	48	Image Motion	45	55	20	1736,-	**OE-fit**	B,D
			7x17	49	Image Motion G.Gun	45	55	20	1736,-		
			7,5x17	9	Nitro Sabre G.Blk	45	55	20	3052,-		
			7,5x17	36	Image Colt	45	55	20	1956,-		
			7,5x17	46	Image Stella	45	55	20	1812,-	**OE-fit**	B,D
			7,5x17	47	Image Stella M.Blk	45	55	20	1812,-	**OE-fit**	B,D
			7,5x17	50	Image Legend	45	55	20	1812,-	**OE-fit**	B,D
			7,5x17	92	Image Colt L.Gun	45	55	20	1876,-		
			7,5x18	2	Nitro Sapphire FF	45	55	20	3944,-		
			7,5x18	34	CSP 16	45	55	20	2444,-	**OE-fit**	B,D
			7,5x18	35	CSP 16 M.Gun	45	55	20	2444,-	**OE-fit**	B,D
			8x18	7	Nitro Spark G.Blk/Grey	45	55	20	3476,-		
			8x18	8	Nitro Spark G.Blk/Red	45	55	20	3476,-		
			8x18	9	Nitro Sabre G.Blk	45	55	20	3496,-		
			8x18	11	Nitro Demon	48	55	14	2784,-		
			8x18	16	Advanti Inizio DST	45	55	20	3828,-		
			8x18	36	Image Colt	45	55	20	2412,-		
			8x18	48	Image Motion	45	55	20	2204,-		
			8x18	49	Image Motion G.Gun	45	55	20	2204,-		
			8x18	92	Image Colt L.Gun	45	55	20	2296,-		
			7,5x19	2	Nitro Sapphire FF	45	55	20	4572,-		
			8x19	16	Advanti Inizio DST	45	55	20	4412,-		
			8,5x19	5	Nitro Volcano G.Gun	45	55	20	4388,-		M
			8,5x19	6	Nitro Volcano	45	55	20	4632,-		M
			8,5x19	9	Nitro Sabre G.Blk	45	55	20	4292,-		M
			8,5x19	36	Image Colt	45	55	20	3028,-		M
			8,5x19	92	Image Colt L.Gun	45	55	20	2876,-		M
			8x20	2	Nitro Sapphire FF	45	55	20	5096,-		
			8,5x20	5	Nitro Volcano G.Gun	45	55	20	4824,-		M
			8,5x20	6	Nitro Volcano	45	55	20	5164,-		M
			8,5x20	7	Nitro Spark G.Blk/Grey	45	55	20	4660,-		M
			8,5x20	8	Nitro Spark G.Blk/Red	45	55	20	4660,-		M
			8,5x20	9	Nitro Sabre G.Blk	45	55	20	4800,-		M
			8,5x20	36	Image Colt	45	55	20	3432,-		M
			8,5x20	92	Image Colt L.Gun	45	55	20	3276,-		M
HONDA				PCD: **5-120** Bolt - Mutter: **14x1,50** CB: **64,1**							
Civic (FK2) Type R	09.15-05.17	18-20	8x18	11	Nitro Demon	40	55	30	2784,-		
			8x19	10	Nitro Demon H.Slv	40	55	30	3624,-		D
			8x19	11	Nitro Demon	40	55	30	3376,-		D
			9x19	11	Nitro Demon	45	55	20	3376,-		M
			8,5x20	11	Nitro Demon	40	55	30	3808,-		
HONDA				PCD: **5-120** Bolt - Mutter: **14x1,50** CB: **64,1**							
Civic (FC) Type R	06.17-	18-20	8x18	11	Nitro Demon	40	60	40	2784,-		
			8x19	11	Nitro Demon	40	60	40	3376,-		
			9x19	11	Nitro Demon	45	60	30	3376,-		M
			8,5x20	11	Nitro Demon	40	60	40	3808,-		M
HONDA				PCD: **5-114,3** Bolt - Mutter: **12x1,50** CB: **64,1**							
Civic (FC)	03.17-	16-20	6,5x16	34	CSP 16	45	45	0	1468,-	**OE-fit**	B,D
Civic (FK)	02.12-02.17	16-20	6,5x16	35	CSP 16 M.Gun	45	45	0	1468,-	**OE-fit**	B,D
Civic (FK) tourer	02.14-03.17	16-20	6,5x16	36	Image Colt	45	45	0	1624,-		
CR-V -	01.15-06.18	17-20	6,5x16	40	Image Spirit	45	45	0	1264,-		
(Facelift)			6,5x16	48	Image Motion	45	45	0	1468,-	**OE-fit**	B,D
			6,5x16	49	Image Motion G.Gun	45	45	0	1468,-		
			6,5x16	92	Image Colt L.Gun	45	45	0	1548,-		
			7x16	17	BM Drive M.Gun	45	45	0	1476,-	**OE-fit**	B,D
			7x16	34	CSP 16	45	45	0	1468,-	**OE-fit**	B,D
			7x16	35	CSP 16 M.Gun	45	45	0	1468,-	**OE-fit**	B,D
			7x16	46	Image Stella	45	45	0	1548,-	**OE-fit**	B,D
			7x16	47	Image Stella M.Blk	45	45	0	1548,-	**OE-fit**	B,D
			7x16	50	Image Legend	45	45	0	1544,-	**OE-fit**	B,D
			7x17	17	BM Drive M.Gun	45	45	0	1736,-	**OE-fit**	B,D
			7x17	34	CSP 16	45	45	0	1836,-	**OE-fit**	B,D
			7x17	35	CSP 16 M.Gun	45	45	0	1836,-	**OE-fit**	B,D
			7x17	40	Image Spirit	45	45	0	1476,-		
			7x17	48	Image Motion	45	45	0	1736,-	**OE-fit**	B,D
			7x17	49	Image Motion G.Gun	45	45	0	1736,-		
			7,5x17	9	Nitro Sabre G.Blk	45	45	0	3052,-		
			7,5x17	34	CSP 16	45	45	0	1836,-	**OE-fit**	B,D
			7,5x17	35	CSP 16 M.Gun	45	45	0	1836,-	**OE-fit**	B,D
			7,5x17	36	Image Colt	45	45	0	1956,-		
			7,5x17	46	Image Stella	45	45	0	1812,-	**OE-fit**	B,D
			7,5x17	47	Image Stella M.Blk	45	45	0	1812,-	**OE-fit**	B,D
			7,5x17	50	Image Legend	45	45	0	1812,-	**OE-fit**	B,D

Forts. neste side »

Bilmerke - Bilmodell	Årsmodell	Dimensjon	Felgdim.	Bilde	Felgmodell	ET Felg	ET Bil	Avvik ET	Veil. Pris eks. MVA	Merknader	B,C D, M
HONDA (forts.)			PCD: **5-114,3** Bolt - Mutter: **12x1,50** CB: **64,1**								
			7,5x17	92	Image Colt L.Gun	45	45	0	1876,-		
			7,5x18	2	Nitro Sapphire FF	45	45	0	3944,-		
			7,5x18	34	CSP 16	45	45	0	2444,-	**OE-fit**	B,D
			7,5x18	35	CSP 16 M.Gun	45	45	0	2444,-	**OE-fit**	B,D
			8x18	7	Nitro Spark G.Blk/Grey	45	45	0	3476,-		
			8x18	8	Nitro Spark G.Blk/Red	45	45	0	3476,-		
			8x18	9	Nitro Sabre G.Blk	45	45	0	3496,-		
			8x18	11	Nitro Demon	48	45	-6	2784,-		
			8x18	16	Advanti Inizio DST	45	45	0	3828,-		
			8x18	36	Image Colt	45	45	0	2412,-		
			8x18	48	Image Motion	45	45	0	2204,-		
			8x18	49	Image Motion G.Gun	45	45	0	2204,-		
			8x18	92	Image Colt L.Gun	45	45	0	2296,-		
			7,5x19	2	Nitro Sapphire FF	45	45	0	4572,-		
			8x19	16	Advanti Inizio DST	45	45	0	4412,-		
			8,5x19	5	Nitro Volcano G.Gun	45	45	0	4388,-		M
			8,5x19	6	Nitro Volcano	45	45	0	4632,-		M
			8,5x19	9	Nitro Sabre G.Blk	45	45	0	4292,-		M
			8,5x19	36	Image Colt	45	45	0	3028,-		M
			8,5x19	92	Image Colt L.Gun	45	45	0	2876,-		M
			8x20	2	Nitro Sapphire FF	45	45	0	5096,-		
			8,5x20	5	Nitro Volcano G.Gun	45	45	0	4824,-		M
			8,5x20	6	Nitro Volcano	45	45	0	5164,-		M
			8,5x20	7	Nitro Spark G.Blk/Grey	45	45	0	4660,-		M
			8,5x20	8	Nitro Spark G.Blk/Red	45	45	0	4660,-		M
			8,5x20	9	Nitro Sabre G.Blk	45	45	0	4800,-		M
			8,5x20	36	Image Colt	45	45	0	3432,-		M
			8,5x20	92	Image Colt L.Gun	45	45	0	3276,-		M
HONDA			PCD: **5-120** Bolt - Mutter: **14x1,50** CB: **64,1**								
Legend	09.04-11.08	17-20	8x18	11	Nitro Demon	40	55	30	2784,-		M
Legend	12.08-06.12	17-20	8x19	10	Nitro Demon H.Slv	40	55	30	3624,-		D
			8x19	11	Nitro Demon	40	55	30	3376,-		D,M
			8,5x20	11	Nitro Demon	40	55	30	3808,-		M
HONDA			PCD: **5-114,3** Bolt - Mutter: **12x1,50** CB: **64,1**								
CR-V	06.97-09.04	15-20	6x15	48	Image Motion	45	50	10	1224,-		
CR-V	10.04-12.06	16-20	6,5x16	34	CSP 16	45	50	10	1468,-	**OE-fit**	B,D
CR-V	01.07-09.12	16-20	6,5x16	35	CSP 16 M.Gun	45	50	10	1468,-	**OE-fit**	B,D
CR-V	10.12-12.14	17-20	6,5x16	36	Image Colt	45	50	10	1624,-		
Element	05-12.11	15-19	6,5x16	40	Image Spirit	45	50	10	1264,-		
FR-V	12.04-08.09	15-20	6,5x16	48	Image Motion	45	50	10	1468,-	**OE-fit**	B,D
HR-V	09.99-12.05	15-20	6,5x16	49	Image Motion G.Gun	45	50	10	1468,-		
Shuttle	09.97-04.01	15-18	6,5x16	92	Image Colt L.Gun	45	50	10	1548,-		
Stream	05.01-11.06	15-18	7x16	17	BM Drive M.Gun	45	50	10	1476,-	**OE-fit**	B,D
			7x16	34	CSP 16	45	50	10	1468,-	**OE-fit**	B,D
			7x16	35	CSP 16 M.Gun	45	50	10	1468,-	**OE-fit**	B,D
			7x16	46	Image Stella	45	50	10	1548,-	**OE-fit**	B,D
			7x16	47	Image Stella M.Blk	45	50	10	1548,-	**OE-fit**	B,D
			7x16	50	Image Legend	45	50	10	1544,-	**OE-fit**	B,D
			7x17	17	BM Drive M.Gun	45	50	10	1736,-	**OE-fit**	B,D
			7x17	34	CSP 16	45	50	10	1836,-	**OE-fit**	B,D
			7x17	35	CSP 16 M.Gun	45	50	10	1836,-	**OE-fit**	B,D
			7x17	40	Image Spirit	45	50	10	1476,-		
			7x17	48	Image Motion	45	50	10	1736,-	**OE-fit**	B,D
			7x17	49	Image Motion G.Gun	45	50	10	1736,-		
			7,5x17	9	Nitro Sabre G.Blk	45	50	10	3052,-		
			7,5x17	36	Image Colt	45	50	10	1956,-		
			7,5x17	46	Image Stella	45	50	10	1812,-	**OE-fit**	B,D
			7,5x17	47	Image Stella M.Blk	45	50	10	1812,-	**OE-fit**	B,D
			7,5x17	50	Image Legend	45	50	10	1812,-	**OE-fit**	B,D
			7,5x17	92	Image Colt L.Gun	45	50	10	1876,-		
			7,5x18	2	Nitro Sapphire FF	45	50	10	3944,-		
			7,5x18	34	CSP 16	45	50	10	2444,-	**OE-fit**	B,D
			7,5x18	35	CSP 16 M.Gun	45	50	10	2444,-	**OE-fit**	B,D
			8x18	7	Nitro Spark G.Blk/Grey	45	50	10	3476,-		
			8x18	8	Nitro Spark G.Blk/Red	45	50	10	3476,-		
			8x18	9	Nitro Sabre G.Blk	45	50	10	3496,-		
			8x18	11	Nitro Demon	48	50	4	2784,-		
			8x18	16	Advanti Inizio DST	45	50	10	3828,-		
			8x18	36	Image Colt	45	50	10	2412,-		
			8x18	48	Image Motion	45	50	10	2204,-		
			8x18	49	Image Motion G.Gun	45	50	10	2204,-		
			8x18	92	Image Colt L.Gun	45	50	10	2296,-		
			7,5x19	2	Nitro Sapphire FF	45	50	10	4572,-		
			8x19	16	Advanti Inizio DST	45	50	10	4412,-		
			8,5x19	5	Nitro Volcano G.Gun	45	50	10	4388,-		M
			8,5x19	6	Nitro Volcano	45	50	10	4632,-		M
			8,5x19	9	Nitro Sabre G.Blk	45	50	10	4292,-		M
			8,5x19	36	Image Colt	45	50	10	3028,-		M
			8,5x19	92	Image Colt L.Gun	45	50	10	2876,-		M
			8x20	2	Nitro Sapphire FF	45	50	10	5096,-		
			8,5x20	5	Nitro Volcano G.Gun	45	50	10	4824,-		M
			8,5x20	6	Nitro Volcano	45	50	10	5164,-		M
			8,5x20	7	Nitro Spark G.Blk/Grey	45	50	10	4660,-		M
			8,5x20	8	Nitro Spark G.Blk/Red	45	50	10	4660,-		M
			8,5x20	9	Nitro Sabre G.Blk	45	50	10	4800,-		M
			8,5x20	36	Image Colt	45	50	10	3432,-		M
			8,5x20	92	Image Colt L.Gun	45	50	10	3276,-		M

Bilmerke - Bilmodell	Årsmodell	Dimensjon	Felgdim.	Bilde	Felgmodell	ET Felg	ET Bil	Avvik ET	Veil. Pris eks. MVA	Merknader	B,C D, M
HONDA				PCD: **5-114,3** Bolt - Mutter: **12x1,50** CB: **64,1**							
CR-V (RW)	07.18-	17-22	7,5x17	9	Nitro Sabre G.Blk	45	45	0	3052,-		
4wd, hybrid 18"			7,5x17	34	CSP 16	45	45	0	1836,-	**OE-fit**	B,D
			7,5x17	35	CSP 16 M.Gun	45	45	0	1836,-	**OE-fit**	B,D
			7,5x17	36	Image Colt	45	45	0	1956,-		
			7,5x17	46	Image Stella	45	45	0	1812,-	**OE-fit**	B,D
			7,5x17	47	Image Stella M.Blk	45	45	0	1812,-	**OE-fit**	B,D
			7,5x17	50	Image Legend	45	45	0	1812,-	**OE-fit**	B,D
			7,5x17	92	Image Colt L.Gun	45	45	0	1876,-		
			7,5x18	2	Nitro Sapphire FF	45	45	0	3944,-		
			7,5x18	34	CSP 16	45	45	0	2444,-	**OE-fit**	B,D
			7,5x18	35	CSP 16 M.Gun	45	45	0	2444,-	**OE-fit**	B,D
			8x18	7	Nitro Spark G.Blk/Grey	45	45	0	3476,-		
			8x18	8	Nitro Spark G.Blk/Red	45	45	0	3476,-		
			8x18	9	Nitro Sabre G.Blk	45	45	0	3496,-		
			8x18	16	Advanti Inizio DST	45	45	0	3828,-		
			8x18	36	Image Colt	45	45	0	2412,-		
			8x18	48	Image Motion	45	45	0	2204,-		
			8x18	49	Image Motion G.Gun	45	45	0	2204,-		
			8x18	50	Image Legend	45	45	0	2276,-		
			8x18	92	Image Colt L.Gun	45	45	0	2296,-		
			7,5x19	2	Nitro Sapphire FF	45	45	0	4572,-		
			8x19	16	Advanti Inizio DST	45	45	0	4412,-		
			8,5x19	5	Nitro Volcano G.Gun	45	45	0	4388,-		
			8,5x19	6	Nitro Volcano	45	45	0	4632,-		
			8,5x19	9	Nitro Sabre G.Blk	45	45	0	4292,-		
			8,5x19	36	Image Colt	45	45	0	3028,-		
			8,5x19	92	Image Colt L.Gun	45	45	0	2876,-		
			8x20	2	Nitro Sapphire FF	45	45	0	5096,-		
			8,5x20	1	Nitro Throne FF	40	45	10	5060,-		M
			8,5x20	5	Nitro Volcano G.Gun	45	45	0	4824,-		
			8,5x20	6	Nitro Volcano	45	45	0	5164,-		
			8,5x20	7	Nitro Spark G.Blk/Grey	45	45	0	4660,-		
			8,5x20	8	Nitro Spark G.Blk/Red	45	45	0	4660,-		
			8,5x20	9	Nitro Sabre G.Blk	45	45	0	4800,-		
			8,5x20	36	Image Colt	45	45	0	3432,-		
			8,5x20	92	Image Colt L.Gun	45	45	0	3276,-		
			9x21	5	Nitro Volcano G.Gun	45	45	0	5540,-		M
			9x21	6	Nitro Volcano	45	45	0	5996,-		M
HUMMER				PCD: **6-139,7** Bolt - Mutter: **12x1,50** CB: **99,5**							
H3	01.05-05.10	16-24	7x16	68	BM Macho	25	38	26	2396,-		
			7x16	69	BM Macho M.Blk	25	38	26	2396,-		
			7,5x17	67	Image Rock	20	38	36	2796,-		
			7,5x17	68	BM Macho	25	38	26	2756,-		
			7,5x17	69	BM Macho M.Blk	25	38	26	2756,-		
			9x17	74	Ballistic Morax	12	38	52	4020,-		M
			7,5x18	67	Image Rock	20	38	36	3324,-		
			8x18	68	BM Macho	20	38	36	3300,-		
			8x18	69	BM Macho M.Blk	20	38	36	3300,-		
			9x18	74	Ballistic Morax	12	38	52	4276,-		M
			9x20	68	BM Macho	20	38	36	4288,-		
			9x20	69	BM Macho M.Blk	20	38	36	4288,-		
			9x20	72	Ballistic Dakota	25	38	26	4624,-		
			9x20	74	Ballistic Morax	12	38	52	4740,-		M
			9x22	72	Ballistic Dakota	25	38	26	5128,-		
HUMMER				PCD: **8-165** Bolt - Mutter: **14x1,50** CB: **117,0**							
H2	01.02-06.09	17-26	9x17	74	Ballistic Morax	12	33	42	4020,-		
			9x18	74	Ballistic Morax	12	33	42	4276,-		M
			9x20	74	Ballistic Morax	12	33	42	4740,-		
HYUNDAI				PCD: **4-114,3** Bolt - Mutter: **12x1,50** CB: **67,1**							
Accent	10.94-12.99	13-15	6x15	37	Image Comet	40	46	12	1316,-		D,M
Atos	04.98-01.01	13-14	6x15	38	Image Comet Slv	40	46	12	1316,-		D,M
HYUNDAI				PCD: **4-100** Bolt - Mutter: **12x1,50** CB: **54,1**							
Atos	02.01-02.08	13-16	5x13	45	Image Ride	38	46	16	1336,-		
I-10 (PA)	03.08-11.13	13-17	5,5x14	37	Image Comet	45	46	2	1264,-	**OE-fit**	B,D
e-Sense, e-Motion 14"			5,5x14	45	Image Ride	38	46	16	1392,-		
			6x15	19	ATS Streetrallye Slv	38	46	16	1960,-		
			6x15	37	Image Comet	45	46	2	1316,-	**OE-fit**	B,D
			6x15	42	Image Brio	40	46	12	1304,-		B
			6x15	45	Image Ride	38	46	16	1552,-		
			6,5x16	19	ATS Streetrallye Slv	40	46	12	2240,-		M
			6,5x16	34	CSP 16	40	46	12	1468,-		M
			6,5x16	42	Image Brio	38	46	16	1524,-		B,M
			7x17	42	Image Brio	40	46	12	1832,-		B,M
HYUNDAI				PCD: **4-100** Bolt - Mutter: **12x1,50** CB: **54,1**							
I-10 (IA)	12.13-11.19	13-17	5,5x14	37	Image Comet	45	47	4	1264,-	**OE-fit**	B,D
			5,5x14	45	Image Ride	38	47	18	1392,-		
			6x15	19	ATS Streetrallye Slv	45	47	4	1960,-		
			6x15	34	CSP 16	51	47	-8	1228,-	**OE-fit**	B,D
			6x15	35	CSP 16 M.Gun	51	47	-8	1228,-	**OE-fit**	B,D
			6x15	37	Image Comet	45	47	4	1316,-	**OE-fit**	B,D
			6x15	42	Image Brio	40	47	14	1304,-		B
			6x15	45	Image Ride	38	47	18	1552,-		
			6x16	19	ATS Streetrallye Slv	45	47	4	2240,-		
			6x16	37	Image Comet	46	47	2	1536,-	**OE-fit**	B,D
			6x16	38	Image Comet Slv	46	47	2	1536,-	**OE-fit**	B,D

Forts. neste side »

Bilmerke - Bilmodell	Årsmodell	Dimensjon	Felgdim.	Bilde	Felgmodell	ET Felg	ET Bil	Avvik ET	Veil. Pris eks. MVA	Merknader	B,C D, M
HYUNDAI (forts.)			PCD: **4-100** Bolt - Mutter: **12x1,50** CB: **54,1**								
			6,5x16	19	ATS Streetrallye Slv	40	47	14	2240,-		
			6,5x16	34	CSP 16	40	47	14	1468,-		
			6,5x16	42	Image Brio	38	47	18	1524,-		B,M
			7x17	18	ATS Streetrallye Blk	45	47	4	3344,-		
			7x17	42	Image Brio	40	47	14	1832,-		B,M
HYUNDAI			PCD: **4-100** Bolt - Mutter: **12x1,50** CB: **54,1**								
I-10 (AC3)	12.19-	14-17	5,5x14	37	Image Comet	45	48	6	1264,-	**OE-fit**	B,D
			5,5x14	45	Image Ride	38	48	20	1392,-		
			6x15	19	ATS Streetrallye Slv	45	48	6	1960,-		
			6x15	34	CSP 16	46	48	4	1228,-	**OE-fit**	B,D
			6x15	35	CSP 16 M.Gun	46	48	4	1228,-	**OE-fit**	B,D
			6x15	37	Image Comet	45	48	6	1316,-	**OE-fit**	B,D
			6x15	42	Image Brio	40	48	16	1304,-		
			6x16	19	ATS Streetrallye Slv	45	48	6	2240,-		
			6x16	37	Image Comet	46	48	4	1536,-	**OE-fit**	B,D
			6x16	38	Image Comet Slv	46	48	4	1536,-	**OE-fit**	B,D
			7x17	18	ATS Streetrallye Blk	45	48	6	3344,-		
			7x17	42	Image Brio	40	48	16	1832,-		
HYUNDAI			PCD: **4-100** Bolt - Mutter: **12x1,50** CB: **54,1**								
Accent	01.00-05.06	13-17	5x13	45	Image Ride	38	46	16	1336,-		
Accent	06.06-12.11	14-18	5,5x14	37	Image Comet	45	46	2	1264,-	**OE-fit**	B,D
Getz (TB)	09.02-12.08	13-18	5,5x14	45	Image Ride	38	46	16	1392,-		
1.3 1.6 1.5CRDi 14"			6x15	19	ATS Streetrallye Slv	45	46	2	1960,-		
Getz Cross	07.07-12.08	14-18	6x15	34	CSP 16	47	46	-2	1228,-	**OE-fit**	B,D
I-20 (GB)	01.15-	15-18	6x15	35	CSP 16 M.Gun	46	46	0	1228,-	**OE-fit**	B,D
I-20 (GB) coupe	06.15-	15-18	6x15	37	Image Comet	45	46	2	1316,-	**OE-fit**	B,D
I-20 (PB)	01.09-12.14	14-18	6x15	42	Image Brio	40	46	12	1304,-		B
			6x15	45	Image Ride	38	46	16	1552,-		
			6x16	19	ATS Streetrallye Slv	45	46	2	2240,-		
			6x16	37	Image Comet	46	46	0	1536,-	**OE-fit**	B,D
			6x16	38	Image Comet Slv	46	46	0	1536,-	**OE-fit**	B,D
			6,5x16	19	ATS Streetrallye Slv	40	46	12	2240,-		
			6,5x16	34	CSP 16	40	46	12	1468,-		
			6,5x16	42	Image Brio	38	46	16	1524,-		B,M
			7x17	18	ATS Streetrallye Blk	45	46	2	3344,-		
			7x17	42	Image Brio	40	46	12	1832,-		B,M
			7,5x18	18	ATS Streetrallye Blk	38	46	16	4180,-		M
HYUNDAI			PCD: **4-114,3** Bolt - Mutter: **12x1,50** CB: **67,1**								
Coupe	09.96-12.01	14-18	6x15	37	Image Comet	40	46	12	1316,-		D
Elantra	09.91-08.00	14-18	6x15	38	Image Comet Slv	40	46	12	1316,-		D
Elantra	09.00-12.06	15-19	6x16	37	Image Comet	40	46	12	1536,-		
Matrix	07.01-08.10	14-18									
Sonata	09.93-12.98	14-18									
Sonata	06.01-02.05	15-18									
HYUNDAI			PCD: **5-114,3** Bolt - Mutter: **12x1,50** CB: **67,1**								
Coupe	01.02-12.08	16-20	6x15	34	CSP 16	48	46	-4	1228,-	**OE-fit**	B,D
I-30 (FD)	08.07-01.12	15-20	6x15	35	CSP 16 M.Gun	46	46	0	1228,-	**OE-fit**	B,D
2.0, 2.0CRDi 16"			6x15	48	Image Motion	45	46	2	1224,-	**OE-fit**	B,D
I-30 (GD)	02.12-12.16	15-20	6,5x16	34	CSP 16	50	46	-8	1468,-	**OE-fit**	B,D
1.6CRDi 16"			6,5x16	35	CSP 16 M.Gun	50	46	-8	1468,-	**OE-fit**	B,D
I-30 (GD) cw	07.12-12.16	15-20	6,5x16	36	Image Colt	45	46	2	1624,-		B
1.6CRDi 16"			6,5x16	40	Image Spirit	45	46	2	1264,-	**OE-fit**	B,D
I-30 (PDE)	01.17-	15-20	6,5x16	46	Image Stella	45	46	2	1548,-	**OE-fit**	B,D
1.4T (103kW) 16"			6,5x16	47	Image Stella M.Blk	45	46	2	1548,-	**OE-fit**	B,D
1.6CRDi 16"			6,5x16	48	Image Motion	45	46	2	1468,-	**OE-fit**	B,D
Ioniq (AE)	07.16-	15-18	6,5x16	49	Image Motion G.Gun	45	46	2	1468,-	**OE-fit**	B,D
Electric 16"			6,5x16	50	Image Legend	45	46	2	1544,-	**OE-fit**	B,D
Plug-in hybrid 16"			6,5x16	92	Image Colt L.Gun	45	46	2	1548,-		B
ix20 (JC)	11.10-	15-20	7x16	17	BM Drive M.Gun	45	46	2	1476,-		D
Sonata	03.05-12.10	16-20	7x17	17	BM Drive M.Gun	50	46	-8	1736,-		D
Trajet	03.00-12.08	15-20	7x17	34	CSP 16	53	46	-14	1836,-	**OE-fit**	B,D
Veloster (FS)	06.11-11.17	16-19	7x17	35	CSP 16 M.Gun	53	46	-14	1836,-	**OE-fit**	B,D
Turbo 17"			7x17	40	Image Spirit	45	46	2	1476,-	**OE-fit**	B,D
XG 25/30	01.00-05.05	15-19	7x17	46	Image Stella	50	46	-8	1812,-	**OE-fit**	B,D
			7x17	47	Image Stella M.Blk	50	46	-8	1812,-	**OE-fit**	B,D
			7x17	48	Image Motion	45	46	2	1736,-	**OE-fit**	B,D
			7x17	49	Image Motion G.Gun	45	46	2	1736,-	**OE-fit**	B,D
			7,5x17	9	Nitro Sabre G.Blk	45	46	2	3052,-		B
			7,5x17	36	Image Colt	45	46	2	1956,-		B
			7,5x17	50	Image Legend	45	46	2	1812,-	**OE-fit**	B,D
			7,5x17	92	Image Colt L.Gun	45	46	2	1876,-		B
			7,5x18	2	Nitro Sapphire FF	45	46	2	3944,-		B
			7,5x18	34	CSP 16	48	46	-4	2444,-	**OE-fit**	B,D
			7,5x18	35	CSP 16 M.Gun	48	46	-4	2444,-	**OE-fit**	B,D
			7,5x18	46	Image Stella	45	46	2	2276,-	**OE-fit**	B,D
			7,5x18	47	Image Stella M.Blk	45	46	2	2276,-	**OE-fit**	B,D
			8x18	7	Nitro Spark G.Blk/Grey	45	46	2	3476,-		B
			8x18	8	Nitro Spark G.Blk/Red	45	46	2	3476,-		B
			8x18	9	Nitro Sabre G.Blk	45	46	2	3496,-		B
			8x18	11	Nitro Demon	48	46	-4	2784,-		
			8x18	16	Advanti Inizio DST	45	46	2	3828,-		B
			8x18	36	Image Colt	45	46	2	2412,-		B
			8x18	48	Image Motion	45	46	2	2204,-	**OE-fit**	B,D
			8x18	49	Image Motion G.Gun	45	46	2	2204,-	**OE-fit**	B,D
			8x18	50	Image Legend	45	46	2	2276,-	**OE-fit**	B,D

Forts. neste side »

Bilmerke - Bilmodell	Årsmodell	Dimensjon	Felgdim.	Bilde	Felgmodell	ET Felg	ET Bil	Avvik ET	Veil. Pris eks. MVA	Merknader	B,C D, M
HYUNDAI (forts.)				PCD: **5-114,3** Bolt - Mutter: **12x1,50** CB: **67,1**							
			8x18	92	Image Colt L.Gun	45	46	2	2296,-		B
			7,5x19	2	Nitro Sapphire FF	45	46	2	4572,-		B
			8x19	16	Advanti Inizio DST	45	46	2	4412,-		B
			8x20	2	Nitro Sapphire FF	45	46	2	5096,-		B
HYUNDAI				PCD: **5-114,3** Bolt - Mutter: **12x1,50** CB: **67,1**							
I-30 (PDE) N	08.17-	18-20	7,5x18	2	Nitro Sapphire FF	45	53	16	3944,-		B
			7,5x18	46	Image Stella	45	53	16	2276,-	**OE-fit**	B,D
			7,5x18	47	Image Stella M.Blk	45	53	16	2276,-	**OE-fit**	B,D
			8x18	9	Nitro Sabre G.Blk	45	53	16	3496,-		B
			8x18	11	Nitro Demon	48	53	10	2784,-		
			8x18	16	Advanti Inizio DST	45	53	16	3828,-		B
			8x18	36	Image Colt	45	53	16	2412,-		B
			8x18	48	Image Motion	45	53	16	2204,-	**OE-fit**	B,D
			8x18	49	Image Motion G.Gun	45	53	16	2204,-	**OE-fit**	B,D
			8x18	50	Image Legend	45	53	16	2276,-	**OE-fit**	B,D
			8x18	92	Image Colt L.Gun	45	53	16	2296,-		B
			7,5x19	2	Nitro Sapphire FF	45	53	16	4572,-		B
			8x19	16	Advanti Inizio DST	45	53	16	4412,-		B
			8,5x19	9	Nitro Sabre G.Blk	45	53	16	4292,-		B
			8,5x19	36	Image Colt	45	53	16	3028,-		B,M
			8,5x19	92	Image Colt L.Gun	45	53	16	2876,-		B,M
			8x20	2	Nitro Sapphire FF	45	53	16	5096,-		B
			8,5x20	9	Nitro Sabre G.Blk	45	53	16	4800,-		B
			8,5x20	36	Image Colt	45	53	16	3432,-		B,M
			8,5x20	92	Image Colt L.Gun	45	53	16	3276,-		B,M
HYUNDAI				PCD: **5-114,3** Bolt - Mutter: **12x1,50** CB: **67,1**							
I-40 (VF)	04.11-09.19	16-20	6,5x16	36	Image Colt	35	46	22	1624,-		B
(Kun biler med 16" orig.			6,5x16	92	Image Colt L.Gun	35	46	22	1548,-		B
kan ha 16", andre 17")			7x17	34	CSP 16	45	46	2	1836,-	**OE-fit**	B,D
I-40 (VF) cw	09.11-09.19	16-20	7x17	48	Image Motion	45	46	2	1736,-	**OE-fit**	B,D
(Kun biler med 16" orig.			7x17	49	Image Motion G.Gun	45	46	2	1736,-	**OE-fit**	B,D
kan ha 16", andre 17")			7,5x17	9	Nitro Sabre G.Blk	45	46	2	3052,-		B
			7,5x17	36	Image Colt	45	46	2	1956,-		B
			7,5x17	50	Image Legend	45	46	2	1812,-	**OE-fit**	B,D
			7,5x17	92	Image Colt L.Gun	45	46	2	1876,-		B
			7,5x18	2	Nitro Sapphire FF	45	46	2	3944,-		B
			7,5x18	34	CSP 16	45	46	2	2444,-	**OE-fit**	B,D
			7,5x18	35	CSP 16 M.Gun	45	46	2	2444,-	**OE-fit**	B,D
			7,5x18	46	Image Stella	45	46	2	2276,-	**OE-fit**	B,D
			7,5x18	47	Image Stella M.Blk	45	46	2	2276,-	**OE-fit**	B,D
			8x18	7	Nitro Spark G.Blk/Grey	45	46	2	3476,-		B
			8x18	8	Nitro Spark G.Blk/Red	45	46	2	3476,-		B
			8x18	9	Nitro Sabre G.Blk	45	46	2	3496,-		B
			8x18	11	Nitro Demon	48	46	-4	2784,-		
			8x18	16	Advanti Inizio DST	45	46	2	3828,-		B
			8x18	36	Image Colt	45	46	2	2412,-		B
			8x18	48	Image Motion	45	46	2	2204,-	**OE-fit**	B,D
			8x18	49	Image Motion G.Gun	45	46	2	2204,-	**OE-fit**	B,D
			8x18	50	Image Legend	45	46	2	2276,-	**OE-fit**	B,D
			8x18	92	Image Colt L.Gun	45	46	2	2296,-		B
			7,5x19	2	Nitro Sapphire FF	45	46	2	4572,-		B
			8x19	16	Advanti Inizio DST	45	46	2	4412,-		B
			8,5x19	5	Nitro Volcano G.Gun	45	46	2	4388,-		B,M
			8,5x19	6	Nitro Volcano	45	46	2	4632,-		B,M
			8,5x19	9	Nitro Sabre G.Blk	45	46	2	4292,-		B,M
			8,5x19	36	Image Colt	45	46	2	3028,-		B,M
			8,5x19	92	Image Colt L.Gun	45	46	2	2876,-		B,M
			8x20	2	Nitro Sapphire FF	45	46	2	5096,-		B
			8,5x20	1	Nitro Throne FF	40	46	12	5060,-		B,M
			8,5x20	5	Nitro Volcano G.Gun	45	46	2	4824,-		B,M
			8,5x20	6	Nitro Volcano	45	46	2	5164,-		B,M
			8,5x20	7	Nitro Spark G.Blk/Grey	45	46	2	4660,-		B,M
			8,5x20	8	Nitro Spark G.Blk/Red	45	46	2	4660,-		B,M
			8,5x20	9	Nitro Sabre G.Blk	45	46	2	4800,-		B,M
			8,5x20	36	Image Colt	45	46	2	3432,-		B,M
			8,5x20	92	Image Colt L.Gun	45	46	2	3276,-		B,M
HYUNDAI				PCD: **5-114,3** Bolt - Mutter: **12x1,50** CB: **67,1**							
Genesis (BK) coupe	02.09-08.16	18-20	8x18	7	Nitro Spark G.Blk/Grey	35	35	0	3476,-		B
			8x18	8	Nitro Spark G.Blk/Red	35	35	0	3476,-		B
			8x18	9	Nitro Sabre G.Blk	35	35	0	3496,-		B
			8,5x19	9	Nitro Sabre G.Blk	35	35	0	4292,-		B
			8,5x20	9	Nitro Sabre G.Blk	35	35	0	4800,-		B
HYUNDAI				PCD: **5-114,3** Bolt - Mutter: **12x1,50** CB: **67,1**							
Nexo (FE)	07.18-	17-20	7x17	34	CSP 16	45	48	6	1836,-	**OE-fit**	B,D
			7x17	40	Image Spirit	45	48	6	1476,-	**OE-fit**	B,D
			7x17	46	Image Stella	45	48	6	1812,-	**OE-fit**	B,D
			7x17	47	Image Stella M.Blk	45	48	6	1812,-	**OE-fit**	B,D
			7x17	48	Image Motion	45	48	6	1736,-	**OE-fit**	B,D
			7x17	49	Image Motion G.Gun	45	48	6	1736,-	**OE-fit**	B,D
			7,5x17	9	Nitro Sabre G.Blk	45	48	6	3052,-		B
			7,5x17	36	Image Colt	45	48	6	1956,-		B
			7,5x17	50	Image Legend	45	48	6	1812,-	**OE-fit**	B,D
			7,5x17	92	Image Colt L.Gun	45	48	6	1876,-		B
			7,5x18	2	Nitro Sapphire FF	45	48	6	3944,-		B
			7,5x18	34	CSP 16	48	48	0	2444,-	**OE-fit**	B,D

Forts. neste side »

Bilmerke - Bilmodell	Årsmodell	Dimensjon	Felgdim.	Bilde	Felgmodell	ET Felg	ET Bil	Avvik ET	Veil. Pris eks. MVA	Merknader	B,C D, M
HYUNDAI (forts.)			PCD: **5-114,3** Bolt - Mutter: **12x1,50** CB: **67,1**								
			7,5x18	35	CSP 16 M.Gun	48	48	0	2444,-	**OE-fit**	B,D
			7,5x18	46	Image Stella	45	48	6	2276,-	**OE-fit**	B,D
			7,5x18	47	Image Stella M.Blk	45	48	6	2276,-	**OE-fit**	B,D
			8x18	7	Nitro Spark G.Blk/Grey	45	48	6	3476,-		B
			8x18	8	Nitro Spark G.Blk/Red	45	48	6	3476,-		B
			8x18	9	Nitro Sabre G.Blk	45	48	6	3496,-		B
			8x18	11	Nitro Demon	48	48	0	2784,-		B
			8x18	16	Advanti Inizio DST	45	48	6	3828,-		B
			8x18	36	Image Colt	45	48	6	2412,-		B
			8x18	48	Image Motion	45	48	6	2204,-	**OE-fit**	B,D
			8x18	49	Image Motion G.Gun	45	48	6	2204,-	**OE-fit**	B,D
			8x18	50	Image Legend	45	48	6	2276,-	**OE-fit**	B,D
			8x18	92	Image Colt L.Gun	45	48	6	2296,-		B
			7,5x19	2	Nitro Sapphire FF	45	48	6	4572,-		B
			8x19	16	Advanti Inizio DST	45	48	6	4412,-		B
			8,5x19	5	Nitro Volcano G.Gun	45	48	6	4388,-		B
			8,5x19	6	Nitro Volcano	45	48	6	4632,-		B
			8,5x19	9	Nitro Sabre G.Blk	45	48	6	4292,-		B
			8,5x19	36	Image Colt	45	48	6	3028,-		B
			8,5x19	92	Image Colt L.Gun	45	48	6	2876,-		B
			8x20	2	Nitro Sapphire FF	45	48	6	5096,-		B
			8,5x20	5	Nitro Volcano G.Gun	45	48	6	4824,-		B
			8,5x20	6	Nitro Volcano	45	48	6	5164,-		B
			8,5x20	7	Nitro Spark G.Blk/Grey	45	48	6	4660,-		B
			8,5x20	8	Nitro Spark G.Blk/Red	45	48	6	4660,-		B
			8,5x20	9	Nitro Sabre G.Blk	45	48	6	4800,-		B
			8,5x20	36	Image Colt	45	48	6	3432,-		B
			8,5x20	92	Image Colt L.Gun	45	48	6	3276,-		B
HYUNDAI			PCD: **5-114,3** Bolt - Mutter: **12x1,50** CB: **67,1**								
Grand Santa Fe (DM)	08.14-12.17	18-22	6,5x16	34	CSP 16	45	46	2	1468,-	**OE-fit**	B,D
ix35 (EL)	03.10-08.13	16-21	6,5x16	35	CSP 16 M.Gun	45	46	2	1468,-	**OE-fit**	B,D
ix35 (EL)	09.13-08.15	16-21	6,5x16	36	Image Colt	45	46	2	1624,-		B
(Facelift)			6,5x16	40	Image Spirit	45	46	2	1264,-	**OE-fit**	B,D
Santa Fe	01.01-02.06	16-20	6,5x16	46	Image Stella	45	46	2	1548,-	**OE-fit**	B,D
Santa Fe (DM)	10.12-12.17	17-22	6,5x16	47	Image Stella M.Blk	45	46	2	1548,-	**OE-fit**	B,D
Santa Fe (TM)	01.18-	18-22	6,5x16	48	Image Motion	45	46	2	1468,-	**OE-fit**	B,D
Tucson (JM)	07.04-02.10	16-20	6,5x16	49	Image Motion G.Gun	45	46	2	1468,-	**OE-fit**	B,D
			6,5x16	50	Image Legend	45	46	2	1544,-	**OE-fit**	B,D
			6,5x16	92	Image Colt L.Gun	45	46	2	1548,-		B
			7x16	17	BM Drive M.Gun	45	46	2	1476,-		D
			7x17	17	BM Drive M.Gun	50	46	-8	1736,-		D
			7x17	34	CSP 16	45	46	2	1836,-	**OE-fit**	B,D
			7x17	35	CSP 16 M.Gun	48	46	-4	1836,-	**OE-fit**	B,D
			7x17	40	Image Spirit	45	46	2	1476,-	**OE-fit**	B,D
			7x17	46	Image Stella	45	46	2	1812,-	**OE-fit**	B,D
			7x17	47	Image Stella M.Blk	45	46	2	1812,-	**OE-fit**	B,D
			7x17	48	Image Motion	45	46	2	1736,-	**OE-fit**	B,D
			7x17	49	Image Motion G.Gun	45	46	2	1736,-	**OE-fit**	B,D
			7,5x17	9	Nitro Sabre G.Blk	45	46	2	3052,-		B
			7,5x17	36	Image Colt	45	46	2	1956,-		B
			7,5x17	50	Image Legend	45	46	2	1812,-	**OE-fit**	B,D
			7,5x17	92	Image Colt L.Gun	45	46	2	1876,-		B
			7,5x18	2	Nitro Sapphire FF	45	46	2	3944,-		B
			7,5x18	34	CSP 16	49	46	-6	2444,-	**OE-fit**	B,D
			7,5x18	35	CSP 16 M.Gun	49	46	-6	2444,-		D
			7,5x18	46	Image Stella	45	46	2	2276,-	**OE-fit**	B,D
			7,5x18	47	Image Stella M.Blk	45	46	2	2276,-	**OE-fit**	B,D
			8x18	7	Nitro Spark G.Blk/Grey	45	46	2	3476,-		B
			8x18	8	Nitro Spark G.Blk/Red	45	46	2	3476,-		B
			8x18	9	Nitro Sabre G.Blk	45	46	2	3496,-		B
			8x18	11	Nitro Demon	48	46	-4	2784,-		
			8x18	16	Advanti Inizio DST	45	46	2	3828,-		B
			8x18	36	Image Colt	45	46	2	2412,-		B
			8x18	48	Image Motion	45	46	2	2204,-	**OE-fit**	B,D
			8x18	49	Image Motion G.Gun	45	46	2	2204,-	**OE-fit**	B,D
			8x18	50	Image Legend	45	46	2	2276,-	**OE-fit**	B,D
			8x18	92	Image Colt L.Gun	45	46	2	2296,-		B
			7,5x19	2	Nitro Sapphire FF	45	46	2	4572,-		B
			8x19	16	Advanti Inizio DST	45	46	2	4412,-		B
			8,5x19	5	Nitro Volcano G.Gun	45	46	2	4388,-		B,M
			8,5x19	6	Nitro Volcano	45	46	2	4632,-		B,M
			8,5x19	9	Nitro Sabre G.Blk	45	46	2	4292,-		B,M
			8,5x19	36	Image Colt	45	46	2	3028,-		B,M
			8,5x19	92	Image Colt L.Gun	45	46	2	2876,-		B,M
			8x20	2	Nitro Sapphire FF	45	46	2	5096,-		B
			8,5x20	1	Nitro Throne FF	40	46	12	5060,-		B,M
			8,5x20	5	Nitro Volcano G.Gun	45	46	2	4824,-		B,M
			8,5x20	6	Nitro Volcano	45	46	2	5164,-		B,M
			8,5x20	7	Nitro Spark G.Blk/Grey	45	46	2	4660,-		B,M
			8,5x20	8	Nitro Spark G.Blk/Red	45	46	2	4660,-		B,M
			8,5x20	9	Nitro Sabre G.Blk	45	46	2	4800,-		B,M
			8,5x20	36	Image Colt	45	46	2	3432,-		B,M
			8,5x20	92	Image Colt L.Gun	45	46	2	3276,-		B,M
			9x21	5	Nitro Volcano G.Gun	45	46	2	5540,-		B,M
			9x21	6	Nitro Volcano	45	46	2	5996,-		B,M

Bilmerke - Bilmodell	Årsmodell	Dimensjon	Felgdim.	Bilde	Felgmodell	ET Felg	ET Bil	Avvik ET	Veil. Pris eks. MVA	Merknader	B,C D, M
HYUNDAI				PCD: **5-114,3** Bolt - Mutter: **12x1,50** CB: **67,1**							
Kona (OS)	10.17-	16-20	6,5x16	34	CSP 16	45	50	10	1468,-	**OE-fit**	B,D
Electric 17"			6,5x16	35	CSP 16 M.Gun	45	50	10	1468,-	**OE-fit**	B,D
			6,5x16	36	Image Colt	45	50	10	1624,-		B
			6,5x16	40	Image Spirit	45	50	10	1264,-	**OE-fit**	B,D
			6,5x16	46	Image Stella	45	50	10	1548,-	**OE-fit**	B,D
			6,5x16	47	Image Stella M.Blk	45	50	10	1548,-	**OE-fit**	B,D
			6,5x16	48	Image Motion	45	50	10	1468,-	**OE-fit**	B,D
			6,5x16	49	Image Motion G.Gun	45	50	10	1468,-	**OE-fit**	B,D
			6,5x16	50	Image Legend	45	50	10	1544,-	**OE-fit**	B,D
			6,5x16	92	Image Colt L.Gun	45	50	10	1548,-		B
			7x16	17	BM Drive M.Gun	45	50	10	1476,-	**OE-fit**	B,D
			7x17	17	BM Drive M.Gun	50	50	0	1736,-	**OE-fit**	B,D
			7x17	34	CSP 16	48	50	4	1836,-	**OE-fit**	B,D
			7x17	35	CSP 16 M.Gun	48	50	4	1836,-	**OE-fit**	B,D
			7x17	40	Image Spirit	45	50	10	1476,-	**OE-fit**	B,D
			7x17	46	Image Stella	50	50	0	1812,-	**OE-fit**	B,D
			7x17	47	Image Stella M.Blk	50	50	0	1812,-	**OE-fit**	B,D
			7x17	48	Image Motion	45	50	10	1736,-	**OE-fit**	B,D
			7x17	49	Image Motion G.Gun	45	50	10	1736,-	**OE-fit**	B,D
			7,5x17	9	Nitro Sabre G.Blk	45	50	10	3052,-		B
			7,5x17	36	Image Colt	45	50	10	1956,-		B
			7,5x17	50	Image Legend	45	50	10	1812,-	**OE-fit**	B,D
			7,5x17	92	Image Colt L.Gun	45	50	10	1876,-		B
			7,5x18	2	Nitro Sapphire FF	45	50	10	3944,-		B
			7,5x18	34	CSP 16	48	50	4	2444,-	**OE-fit**	B,D
			7,5x18	35	CSP 16 M.Gun	48	50	4	2444,-	**OE-fit**	B,D
			7,5x18	46	Image Stella	45	50	10	2276,-	**OE-fit**	B,D
			7,5x18	47	Image Stella M.Blk	45	50	10	2276,-	**OE-fit**	B,D
			8x18	7	Nitro Spark G.Blk/Grey	45	50	10	3476,-		B
			8x18	8	Nitro Spark G.Blk/Red	45	50	10	3476,-		B
			8x18	9	Nitro Sabre G.Blk	45	50	10	3496,-		B
			8x18	11	Nitro Demon	48	50	4	2784,-		B
			8x18	16	Advanti Inizio DST	45	50	10	3828,-		B
			8x18	36	Image Colt	45	50	10	2412,-		B
			8x18	48	Image Motion	45	50	10	2204,-	**OE-fit**	B,D
			8x18	49	Image Motion G.Gun	45	50	10	2204,-	**OE-fit**	B,D
			8x18	50	Image Legend	45	50	10	2276,-	**OE-fit**	B,D
			8x18	92	Image Colt L.Gun	45	50	10	2296,-		B
			7,5x19	2	Nitro Sapphire FF	45	50	10	4572,-		B
			8x19	16	Advanti Inizio DST	45	50	10	4412,-		B
			8,5x19	5	Nitro Volcano G.Gun	45	50	10	4388,-		B
			8,5x19	6	Nitro Volcano	45	50	10	4632,-		B
			8,5x19	9	Nitro Sabre G.Blk	45	50	10	4292,-		B
			8,5x19	36	Image Colt	45	50	10	3028,-		B
			8,5x19	92	Image Colt L.Gun	45	50	10	2876,-		B
			8x20	2	Nitro Sapphire FF	45	50	10	5096,-		B
			8,5x20	5	Nitro Volcano G.Gun	45	50	10	4824,-		B
			8,5x20	6	Nitro Volcano	45	50	10	5164,-		B
			8,5x20	7	Nitro Spark G.Blk/Grey	45	50	10	4660,-		B
			8,5x20	8	Nitro Spark G.Blk/Red	45	50	10	4660,-		B
			8,5x20	9	Nitro Sabre G.Blk	45	50	10	4800,-		B
			8,5x20	36	Image Colt	45	50	10	3432,-		B
			8,5x20	92	Image Colt L.Gun	45	50	10	3276,-		B
HYUNDAI				PCD: **5-114,3** Bolt - Mutter: **12x1,50** CB: **67,1**							
Tucson (TLE)	08.15-	16-21	6,5x16	34	CSP 16	45	51	12	1468,-	**OE-fit**	B,D
(Kun biler med 16" orig.			6,5x16	35	CSP 16 M.Gun	45	51	12	1468,-	**OE-fit**	B,D
kan ha 16", andre 17")			6,5x16	36	Image Colt	45	51	12	1624,-		B
			6,5x16	46	Image Stella	45	51	12	1548,-	**OE-fit**	B,D
			6,5x16	47	Image Stella M.Blk	45	51	12	1548,-	**OE-fit**	B,D
			6,5x16	48	Image Motion	45	51	12	1468,-	**OE-fit**	B,D
			6,5x16	49	Image Motion G.Gun	45	51	12	1468,-	**OE-fit**	B,D
			6,5x16	50	Image Legend	45	51	12	1544,-	**OE-fit**	B,D
			6,5x16	92	Image Colt L.Gun	45	51	12	1548,-		B
			7x16	17	BM Drive M.Gun	45	51	12	1476,-		D
			7x17	17	BM Drive M.Gun	50	51	2	1736,-		D
			7x17	34	CSP 16	45	51	12	1836,-	**OE-fit**	B,D
			7x17	35	CSP 16 M.Gun	48	51	6	1836,-	**OE-fit**	B,D
			7x17	40	Image Spirit	45	51	12	1476,-	**OE-fit**	B,D
			7x17	46	Image Stella	45	51	12	1812,-	**OE-fit**	B,D
			7x17	47	Image Stella M.Blk	45	51	12	1812,-	**OE-fit**	B,D
			7x17	48	Image Motion	45	51	12	1736,-	**OE-fit**	B,D
			7x17	49	Image Motion G.Gun	45	51	12	1736,-	**OE-fit**	B,D
			7,5x17	9	Nitro Sabre G.Blk	45	51	12	3052,-		B
			7,5x17	36	Image Colt	45	51	12	1956,-		B
			7,5x17	50	Image Legend	45	51	12	1812,-	**OE-fit**	B,D
			7,5x17	92	Image Colt L.Gun	45	51	12	1876,-		B
			7,5x18	2	Nitro Sapphire FF	45	51	12	3944,-		B
			7,5x18	34	CSP 16	48	51	6	2444,-	**OE-fit**	B,D
			7,5x18	35	CSP 16 M.Gun	48	51	6	2444,-	**OE-fit**	B,D
			7,5x18	46	Image Stella	45	51	12	2276,-	**OE-fit**	B,D
			7,5x18	47	Image Stella M.Blk	45	51	12	2276,-	**OE-fit**	B,D
			8x18	7	Nitro Spark G.Blk/Grey	45	51	12	3476,-		B
			8x18	8	Nitro Spark G.Blk/Red	45	51	12	3476,-		B
			8x18	9	Nitro Sabre G.Blk	45	51	12	3496,-		B
			8x18	11	Nitro Demon	48	51	6	2784,-		
			8x18	16	Advanti Inizio DST	45	51	12	3828,-		B

Forts. neste side »

Bilmerke - Bilmodell	Årsmodell	Dimensjon	Felgdim.	Bilde	Felgmodell	ET Felg	ET Bil	Avvik ET	Veil. Pris eks. MVA	Merknader	B,C D, M
HYUNDAI (forts.)			PCD: **5-114,3** Bolt - Mutter: **12x1,50** CB: **67,1**								
			8x18	36	Image Colt	45	51	12	2412,-		B
			8x18	48	Image Motion	45	51	12	2204,-	**OE-fit**	B,D
			8x18	49	Image Motion G.Gun	45	51	12	2204,-	**OE-fit**	B,D
			8x18	50	Image Legend	45	51	12	2276,-	**OE-fit**	B,D
			8x18	92	Image Colt L.Gun	45	51	12	2296,-		B
			7,5x19	2	Nitro Sapphire FF	45	51	12	4572,-		B
			8x19	16	Advanti Inizio DST	45	51	12	4412,-		B
			8,5x19	5	Nitro Volcano G.Gun	45	51	12	4388,-		B,M
			8,5x19	6	Nitro Volcano	45	51	12	4632,-		B,M
			8,5x19	9	Nitro Sabre G.Blk	45	51	12	4292,-		B,M
			8,5x19	36	Image Colt	45	51	12	3028,-		B,M
			8,5x19	92	Image Colt L.Gun	45	51	12	2876,-		B,M
			8x20	2	Nitro Sapphire FF	45	51	12	5096,-		B
			8,5x20	1	Nitro Throne FF	40	51	22	5060,-		B,M
			8,5x20	5	Nitro Volcano G.Gun	45	51	12	4824,-		B,M
			8,5x20	6	Nitro Volcano	45	51	12	5164,-		B,M
			8,5x20	7	Nitro Spark G.Blk/Grey	45	51	12	4660,-		B,M
			8,5x20	8	Nitro Spark G.Blk/Red	45	51	12	4660,-		B,M
			8,5x20	9	Nitro Sabre G.Blk	45	51	12	4800,-		B,M
			8,5x20	36	Image Colt	45	51	12	3432,-		B,M
			8,5x20	92	Image Colt L.Gun	45	51	12	3276,-		B,M
			9x21	5	Nitro Volcano G.Gun	45	51	12	5540,-		B,M
			9x21	6	Nitro Volcano	45	51	12	5996,-		B,M
HYUNDAI			PCD: **5-114,3** Bolt - Mutter: **12x1,50** CB: **67,1**								
Santa Fe (CM)	03.06-09.12	17-22	7,5x17	9	Nitro Sabre G.Blk	35	41	12	3052,-		B
			7,5x17	36	Image Colt	35	41	12	1956,-		B
			7,5x17	92	Image Colt L.Gun	35	41	12	1876,-		
			7,5x18	2	Nitro Sapphire FF	35	41	12	3944,-		B
			8x18	7	Nitro Spark G.Blk/Grey	35	41	12	3476,-		B
			8x18	8	Nitro Spark G.Blk/Red	35	41	12	3476,-		B
			8x18	9	Nitro Sabre G.Blk	35	41	12	3496,-		B
			8x18	16	Advanti Inizio DST	35	41	12	3828,-		B
			8x18	36	Image Colt	35	41	12	2412,-		B
			8x18	92	Image Colt L.Gun	35	41	12	2296,-		
			7,5x19	2	Nitro Sapphire FF	35	41	12	4572,-		B
			8x19	11	Nitro Demon	38	41	6	3376,-		
			8x19	16	Advanti Inizio DST	35	41	12	4412,-		B
			8,5x19	5	Nitro Volcano G.Gun	35	41	12	4388,-		B
			8,5x19	6	Nitro Volcano	35	41	12	4632,-		B
			8,5x19	9	Nitro Sabre G.Blk	35	41	12	4292,-		B
			8,5x19	36	Image Colt	35	41	12	3028,-		B
			8,5x19	92	Image Colt L.Gun	35	41	12	2876,-		B
			8x20	2	Nitro Sapphire FF	35	41	12	5096,-		B
			8,5x20	1	Nitro Throne FF	40	41	2	5060,-		B,M
			8,5x20	5	Nitro Volcano G.Gun	35	41	12	4824,-		B
			8,5x20	6	Nitro Volcano	35	41	12	5164,-		B
			8,5x20	7	Nitro Spark G.Blk/Grey	35	41	12	4660,-		B,M
			8,5x20	8	Nitro Spark G.Blk/Red	35	41	12	4660,-		B,M
			8,5x20	9	Nitro Sabre G.Blk	35	41	12	4800,-		B
			8,5x20	11	Nitro Demon	38	41	6	3808,-		
			8,5x20	36	Image Colt	35	41	12	3432,-		B
			8,5x20	92	Image Colt L.Gun	35	41	12	3276,-		B
			9x21	5	Nitro Volcano G.Gun	35	41	12	5540,-		B,M
			9x21	6	Nitro Volcano	35	41	12	5996,-		B,M
HYUNDAI			PCD: **6-139,7** Bolt - Mutter: **12x1,50** CB: **106,0**								
Terracan	01.02-12.07	15-22	8x16	78	Advanti Peak	5	20	30	2692,-		
INFINITI			PCD: **5-114,3** Bolt - Mutter: **12x1,25** CB: **66,1**								
EX (J50)	01.08-06.13	18-22	7x17	17	BM Drive M.Gun	40	40	0	1736,-		D
G 35	10.03-12.07	17-20	7,5x17	9	Nitro Sabre G.Blk	35	40	10	3052,-		
G 37 cab	01.08-06.13	18-20	7,5x17	36	Image Colt	35	40	10	1956,-		
G 37 coupe	01.08-06.13	18-20	7,5x17	92	Image Colt L.Gun	35	40	10	1876,-		
G 37 sedan	01.08-06.13	18-20	7,5x18	2	Nitro Sapphire FF	35	40	10	3944,-		
M (Y51)	09.10-06.13	18-20	8x18	7	Nitro Spark G.Blk/Grey	35	40	10	3476,-		
M 35/45	12.04-02.10	17-20	8x18	8	Nitro Spark G.Blk/Red	35	40	10	3476,-		
Q 45	01.03-10.08	17-20	8x18	9	Nitro Sabre G.Blk	35	40	10	3496,-		
			8x18	16	Advanti Inizio DST	35	40	10	3828,-		
			8x18	36	Image Colt	35	40	10	2412,-		
			8x18	92	Image Colt L.Gun	35	40	10	2296,-		
			7,5x19	2	Nitro Sapphire FF	35	40	10	4572,-		
			8x19	11	Nitro Demon	38	40	4	3376,-		
			8x19	16	Advanti Inizio DST	35	40	10	4412,-		
			8,5x19	9	Nitro Sabre G.Blk	35	40	10	4292,-		
			8,5x19	36	Image Colt	35	40	10	3028,-		
			8,5x19	92	Image Colt L.Gun	35	40	10	2876,-		
			8x20	2	Nitro Sapphire FF	35	40	10	5096,-		
			8,5x20	7	Nitro Spark G.Blk/Grey	35	40	10	4660,-		
			8,5x20	8	Nitro Spark G.Blk/Red	35	40	10	4660,-		
			8,5x20	9	Nitro Sabre G.Blk	35	40	10	4800,-		
			8,5x20	11	Nitro Demon	38	40	4	3808,-		
			8,5x20	36	Image Colt	35	40	10	3432,-		
			8,5x20	92	Image Colt L.Gun	35	40	10	3276,-		

Bilmerke - Bilmodell	Årsmodell	Dimensjon	Felgdim.	Bilde	Felgmodell	ET Felg	ET Bil	Avvik ET	Veil. Pris eks. MVA	Merknader	B,C D, M
INFINITI			PCD: **5-114,3** Bolt - Mutter: **12x1,25** CB: **66,1**								
Q (Y33) 50	01.14-	17-20	7,5x17	36	Image Colt	45	45	0	1956,-		
3,0 Turbo (298kW) 19"			7,5x17	92	Image Colt L.Gun	45	45	0	1876,-		
3,5 Hybrid (268kW) 19"			7,5x18	2	Nitro Sapphire FF	45	45	0	3944,-		
			8x18	7	Nitro Spark G.Blk/Grey	45	45	0	3476,-		
			8x18	8	Nitro Spark G.Blk/Red	45	45	0	3476,-		
			8x18	11	Nitro Demon	48	45	-6	2784,-		
			8x18	16	Advanti Inizio DST	45	45	0	3828,-		
			8x18	36	Image Colt	45	45	0	2412,-		
			8x18	92	Image Colt L.Gun	45	45	0	2296,-		
			7,5x19	2	Nitro Sapphire FF	45	45	0	4572,-		
			8x19	16	Advanti Inizio DST	45	45	0	4412,-		
			8,5x19	9	Nitro Sabre G.Blk	45	45	0	4292,-		
			8,5x19	36	Image Colt	45	45	0	3028,-		
			8,5x19	92	Image Colt L.Gun	45	45	0	2876,-		
			8x20	2	Nitro Sapphire FF	45	45	0	5096,-		
			8,5x20	7	Nitro Spark G.Blk/Grey	45	45	0	4660,-		
			8,5x20	8	Nitro Spark G.Blk/Red	45	45	0	4660,-		
			8,5x20	9	Nitro Sabre G.Blk	45	45	0	4800,-		
			8,5x20	36	Image Colt	45	45	0	3432,-		
			8,5x20	92	Image Colt L.Gun	45	45	0	3276,-		
INFINITI			PCD: **5-114,3** Bolt - Mutter: **12x1,25** CB: **66,1**								
Q (Y51) 70	07.13-	18-21	7,5x18	2	Nitro Sapphire FF	35	43	16	3944,-		
			8x18	7	Nitro Spark G.Blk/Grey	35	43	16	3476,-		
			8x18	8	Nitro Spark G.Blk/Red	35	43	16	3476,-		
			8x18	9	Nitro Sabre G.Blk	35	43	16	3496,-		
			8x18	16	Advanti Inizio DST	35	43	16	3828,-		
			8x18	36	Image Colt	35	43	16	2412,-		
			8x18	92	Image Colt L.Gun	35	43	16	2296,-		
			7,5x19	2	Nitro Sapphire FF	35	43	16	4572,-		
			8x19	11	Nitro Demon	38	43	10	3376,-		
			8x19	16	Advanti Inizio DST	35	43	16	4412,-		
			8,5x19	9	Nitro Sabre G.Blk	35	43	16	4292,-		
			8,5x19	36	Image Colt	35	43	16	3028,-		M
			8,5x19	92	Image Colt L.Gun	35	43	16	2876,-		M
			8x20	2	Nitro Sapphire FF	35	43	16	5096,-		
			8,5x20	7	Nitro Spark G.Blk/Grey	35	43	16	4660,-		
			8,5x20	8	Nitro Spark G.Blk/Red	35	43	16	4660,-		
			8,5x20	9	Nitro Sabre G.Blk	35	43	16	4800,-		
			8,5x20	11	Nitro Demon	38	43	10	3808,-		
			8,5x20	36	Image Colt	35	43	16	3432,-		M
			8,5x20	92	Image Colt L.Gun	35	43	16	3276,-		M
INFINITI			PCD: **5-112** Bolt - Mutter: **14x1,50B** CB: **66,5**								
QX (H15) 30	03.16-	17-20	8x17	17	BM Drive M.Gun	35	41	12	1736,-		D
			8x18	7	Nitro Spark G.Blk/Grey	35	41	12	3476,-		D
			8x18	10	Nitro Demon H.Slv	35	41	12	2972,-		D
			8x18	11	Nitro Demon	35	41	12	2784,-		D
			8x18	17	BM Drive M.Gun	35	41	12	2296,-		D
			8x19	10	Nitro Demon H.Slv	35	41	12	3624,-		D
			8x19	11	Nitro Demon	35	41	12	3376,-		D
			8,5x19	9	Nitro Sabre G.Blk	35	41	12	4292,-		D,M
			8,5x20	7	Nitro Spark G.Blk/Grey	35	41	12	4660,-		D
			8,5x20	9	Nitro Sabre G.Blk	35	41	12	4800,-		D,M
			8,5x20	10	Nitro Demon H.Slv	38	41	6	4104,-		D
			8,5x20	11	Nitro Demon	38	41	6	3808,-		D,M
INFINITI			PCD: **5-114,3** Bolt - Mutter: **12x1,25** CB: **66,1**								
FX 35/45	03.03-08.08	18-22	7,5x18	2	Nitro Sapphire FF	35	35	0	3944,-		
			7,5x18	34	CSP 16	40	35	-10	2444,-		D
			7,5x18	35	CSP 16 M.Gun	40	35	-10	2444,-		D
			7,5x18	46	Image Stella	40	35	-10	2276,-		D
			7,5x18	47	Image Stella M.Blk	40	35	-10	2276,-		D
			8x18	7	Nitro Spark G.Blk/Grey	35	35	0	3476,-		
			8x18	8	Nitro Spark G.Blk/Red	35	35	0	3476,-		
			8x18	9	Nitro Sabre G.Blk	35	35	0	3496,-		
			8x18	16	Advanti Inizio DST	35	35	0	3828,-		
			8x18	36	Image Colt	35	35	0	2412,-		
			7,5x19	2	Nitro Sapphire FF	35	35	0	4572,-		
			8x19	11	Nitro Demon	38	35	-6	3376,-		
			8x19	16	Advanti Inizio DST	35	35	0	4412,-		
			8,5x19	9	Nitro Sabre G.Blk	35	35	0	4292,-		
			8,5x19	36	Image Colt	35	35	0	3028,-		
			8,5x19	92	Image Colt L.Gun	35	35	0	2876,-		
			8x20	2	Nitro Sapphire FF	35	35	0	5096,-		
			8,5x20	7	Nitro Spark G.Blk/Grey	35	35	0	4660,-		
			8,5x20	8	Nitro Spark G.Blk/Red	35	35	0	4660,-		
			8,5x20	9	Nitro Sabre G.Blk	35	35	0	4800,-		
			8,5x20	11	Nitro Demon	38	35	-6	3808,-		
			8,5x20	36	Image Colt	35	35	0	3432,-		
			8,5x20	92	Image Colt L.Gun	35	35	0	3276,-		
INFINITI			PCD: **5-114,3** Bolt - Mutter: **12x1,25** CB: **66,1**								
FX (S51)	09.08-	18-22	7,5x18	2	Nitro Sapphire FF	45	45	0	3944,-		
			7,5x18	34	CSP 16	40	45	10	2444,-		D
			7,5x18	35	CSP 16 M.Gun	40	45	10	2444,-		D
			7,5x18	46	Image Stella	40	45	10	2276,-		D
			7,5x18	47	Image Stella M.Blk	40	45	10	2276,-		D
			8x18	7	Nitro Spark G.Blk/Grey	45	45	0	3476,-		

Forts. neste side »

Bilmerke - Bilmodell	Årsmodell	Dimensjon	Felgdim.	Bilde	Felgmodell	ET Felg	ET Bil	Avvik ET	Veil. Pris eks. MVA	Merknader	B,C D, M
INFINITI (forts.)			PCD: **5-114,3** Bolt - Mutter: **12x1,25** CB: **66,1**								
			8x18	8	Nitro Spark G.Blk/Red	45	45	0	3476,-		
			8x18	11	Nitro Demon	48	45	-6	2784,-		
			8x18	16	Advanti Inizio DST	45	45	0	3828,-		
			8x18	36	Image Colt	45	45	0	2412,-		
			8x18	92	Image Colt L.Gun	45	45	0	2296,-		
			7,5x19	2	Nitro Sapphire FF	45	45	0	4572,-		
			8x19	16	Advanti Inizio DST	45	45	0	4412,-		
			8,5x19	9	Nitro Sabre G.Blk	45	45	0	4292,-		
			8,5x19	36	Image Colt	45	45	0	3028,-		
			8,5x19	92	Image Colt L.Gun	45	45	0	2876,-		
			8x20	2	Nitro Sapphire FF	45	45	0	5096,-		
			8,5x20	7	Nitro Spark G.Blk/Grey	45	45	0	4660,-		
			8,5x20	8	Nitro Spark G.Blk/Red	45	45	0	4660,-		
			8,5x20	9	Nitro Sabre G.Blk	45	45	0	4800,-		
			8,5x20	36	Image Colt	45	45	0	3432,-		
			8,5x20	92	Image Colt L.Gun	45	45	0	3276,-		
			9x21	5	Nitro Volcano G.Gun	45	45	0	5540,-		M
			9x21	6	Nitro Volcano	45	45	0	5996,-		M
INFINITI			PCD: **6-139,7** Bolt - Mutter: **12x1,25** CB: **78,1**								
QX (JA60) 56	01.04-03.10	18-26	8x18	68	BM Macho	20	25	10	3300,-		
QX (Z62) 56	04.10-12.13	20-26	8x18	69	BM Macho M.Blk	20	25	10	3300,-		
QX (Z62) 80	01.14-	20-26	9x18	74	Ballistic Morax	12	25	26	4276,-		
			9x20	68	BM Macho	20	25	10	4288,-		
			9x20	69	BM Macho M.Blk	20	25	10	4288,-		
			9x20	72	Ballistic Dakota	20	25	10	4624,-		D
			9x20	74	Ballistic Morax	12	25	26	4740,-		
			9x22	72	Ballistic Dakota	20	25	10	5128,-		D
ISUZU			PCD: **6-139,7** Bolt - Mutter: **12x1,50** CB: **110,0**								
Campo	-	15-17	8x16	78	Advanti Peak	5	30	50	2692,-		D,M
Trooper	87-	15-17									
ISUZU			PCD: **6-139,7** Bolt - Mutter: **12x1,50** CB: **100,0**								
D-max 4wd	09.06-03.12	16-22	7x16	68	BM Macho	25	38	26	2396,-		
			7x16	69	BM Macho M.Blk	25	38	26	2396,-		
			8x16	78	Advanti Peak	5	38	66	2692,-		M
			7,5x17	68	BM Macho	25	38	26	2756,-		
			7,5x17	69	BM Macho M.Blk	25	38	26	2756,-		
			9x17	74	Ballistic Morax	12	38	52	4020,-		M
			8x18	69	BM Macho M.Blk	20	38	36	3300,-		
			9x18	74	Ballistic Morax	12	38	52	4276,-		M
			9x20	68	BM Macho	20	38	36	4288,-		
			9x20	69	BM Macho M.Blk	20	38	36	4288,-		
			9x20	74	Ballistic Morax	12	38	52	4740,-		M
ISUZU			PCD: **6-139,7** Bolt - Mutter: **12x1,50** CB: **100,0**								
D-max 2wd	04.12-	15-18	7x16	68	BM Macho	25	41	32	2396,-		
			7x16	69	BM Macho M.Blk	25	41	32	2396,-		
			7,5x17	68	BM Macho	25	41	32	2756,-		
			7,5x17	69	BM Macho M.Blk	25	41	32	2756,-		
			8x18	68	BM Macho	20	41	42	3300,-		
			8x18	69	BM Macho M.Blk	20	41	42	3300,-		
ISUZU			PCD: **6-139,7** Bolt - Mutter: **12x1,50** CB: **100,0**								
D-max (ATFS) 4wd	04.12-	16-22	7x16	68	BM Macho	25	33	16	2396,-		
			7x16	69	BM Macho M.Blk	25	33	16	2396,-		
			8x16	78	Advanti Peak	5	33	56	2692,-		
			7,5x17	67	Image Rock	20	33	26	2796,-		
			7,5x17	68	BM Macho	25	33	16	2756,-		
			7,5x17	69	BM Macho M.Blk	25	33	16	2756,-		
			9x17	74	Ballistic Morax	12	33	42	4020,-		M
			7,5x18	67	Image Rock	20	33	26	3324,-		
			8x18	68	BM Macho	20	33	26	3300,-		
			8x18	69	BM Macho M.Blk	20	33	26	3300,-		
			9x18	74	Ballistic Morax	12	33	42	4276,-		M
			9x20	68	BM Macho	20	33	26	4288,-		
			9x20	69	BM Macho M.Blk	20	33	26	4288,-		
			9x20	72	Ballistic Dakota	25	33	16	4624,-		
			9x20	74	Ballistic Morax	12	33	42	4740,-		M
			9x22	72	Ballistic Dakota	25	33	16	5128,-		
IVECO			PCD: **5-118** Bolt - Mutter: **14x1,50B** CB: **71,1**								
Daily S2000 29L	07.99-07.06	15-18	6x15	58	Image Strong	62	68	12	2116,-		D
Daily S2000 35S	07.99-08.06	15-18	6x15	59	Image Strong M.Gun	62	68	12	2116,-		D
			6,5x16	58	Image Strong	62	68	12	2500,-		D
			6,5x16	59	Image Strong M.Gun	62	68	12	2500,-		D
			6,5x17	58	Image Strong	62	68	12	2884,-		D
			6,5x17	59	Image Strong M.Gun	62	68	12	2884,-		D
IVECO			PCD: **6-125** Bolt - Mutter: **14x1,50B** CB: **74,1**								
Daily 29L	08.06-	16-18	6,5x16	58	Image Strong	62	68	12	2500,-		D
Daily 35S	08.06-	16-18	6,5x16	59	Image Strong M.Gun	62	68	12	2500,-		D
JAGUAR			PCD: **5-108** Bolt - Mutter: **12x1,50** CB: **63,4**								
S-Type	01.99-05.06	16-20	6,5x16	36	Image Colt	45	60	30	1624,-		D
3.0, 4.2 17"			6,5x16	92	Image Colt L.Gun	45	60	30	1548,-		D
S-Type	08.06-01.08	17-20	7x16	17	BM Drive M.Gun	50	60	20	1476,-		D
S-Type R	01.02-01.08	18-20	7x16	40	Image Spirit	45	60	30	1264,-		D
X-Type	03.01-07.06	16-20	7x16	46	Image Stella	50	60	20	1548,-		D
X-Type	08.06-12.09	17-20	7x16	47	Image Stella M.Blk	50	60	20	1548,-		D
			7x16	48	Image Motion	50	60	20	1468,-	**OE-fit**	B,D

Forts. neste side »

Bilmerke - Bilmodell	Årsmodell	Dimensjon	Felgdim.	Bilde	Felgmodell	ET Felg	ET Bil	Avvik ET	Veil. Pris eks. MVA	Merknader	B,C D, M
JAGUAR (forts.)				PCD: **5-108** Bolt - Mutter: **12x1,50**	CB: **63,4**						
			7x16	49	Image Motion G.Gun	50	60	20	1468,-	**OE-fit**	B,D
			7x16	50	Image Legend	50	60	20	1544,-	**OE-fit**	B,D
			7,5x17	9	Nitro Sabre G.Blk	45	60	30	3052,-		D
			7,5x17	36	Image Colt	47	60	26	1956,-		D
			7,5x17	46	Image Stella	50	60	20	1812,-		D
			7,5x17	47	Image Stella M.Blk	50	60	20	1812,-		D
			7,5x17	50	Image Legend	45	60	30	1812,-	**OE-fit**	B,D
			7,5x17	92	Image Colt L.Gun	47	60	26	1876,-		D
			8x17	17	BM Drive M.Gun	48	60	24	1736,-		D
			7,5x18	2	Nitro Sapphire FF	50	60	20	3944,-		D
			7,5x18	46	Image Stella	50	60	20	2276,-		D
			7,5x18	47	Image Stella M.Blk	50	60	20	2276,-		D
			8x18	7	Nitro Spark G.Blk/Grey	47	60	26	3476,-		D
			8x18	8	Nitro Spark G.Blk/Red	45	60	30	3476,-		
			8x18	9	Nitro Sabre G.Blk	47	60	26	3496,-		D
			8x18	10	Nitro Demon H.Slv	48	60	24	2972,-		D
			8x18	11	Nitro Demon	48	60	24	2784,-		D
			8x18	17	BM Drive M.Gun	48	60	24	2296,-		D
			8x18	36	Image Colt	47	60	26	2412,-		D
			8x18	41	Image Thor	42	60	36	2412,-		D
			8x18	50	Image Legend	42	60	36	2276,-	**OE-fit**	B,D
			8x18	92	Image Colt L.Gun	47	60	26	2296,-		D
			7,5x19	2	Nitro Sapphire FF	50	60	20	4572,-		D
			8x19	3	Nitro Turismo FF	50	60	20	4492,-		D
			8x19	4	Nitro Turismo FF G.Gun/Pol	50	60	20	4644,-		D
			8x19	10	Nitro Demon H.Slv	48	60	24	3624,-		D
			8x19	11	Nitro Demon	48	60	24	3376,-		D
			8,5x19	3	Nitro Turismo FF	45	60	30	4492,-		D
			8,5x19	4	Nitro Turismo FF G.Gun/Pol	45	60	30	4644,-		D
			8,5x19	5	Nitro Volcano G.Gun	45	60	30	4388,-		D,M
			8,5x19	6	Nitro Volcano	45	60	30	4632,-		D,M
			8,5x19	9	Nitro Sabre G.Blk	47	60	26	4292,-		D
			8,5x19	36	Image Colt	47	60	26	3028,-		D
			8,5x19	41	Image Thor	47	60	26	3048,-		D
			8,5x19	92	Image Colt L.Gun	47	60	26	2876,-		D
			8x20	2	Nitro Sapphire FF	50	60	20	5096,-		D
			8x20	3	Nitro Turismo FF	45	60	30	4812,-		D
			8x20	4	Nitro Turismo FF G.Gun/Pol	45	60	30	4964,-		D
			8,5x20	2	Nitro Sapphire FF	47	60	26	5216,-		D
			8,5x20	3	Nitro Turismo FF	45	60	30	4812,-		D
			8,5x20	4	Nitro Turismo FF G.Gun/Pol	45	60	30	4964,-		D
			8,5x20	5	Nitro Volcano G.Gun	45	60	30	4824,-	**OE-fit**	B,D
			8,5x20	6	Nitro Volcano	45	60	30	5164,-	**OE-fit**	B,D
			8,5x20	7	Nitro Spark G.Blk/Grey	47	60	26	4660,-		D
			8,5x20	8	Nitro Spark G.Blk/Red	45	60	30	4660,-		
			8,5x20	9	Nitro Sabre G.Blk	47	60	26	4800,-		D
			8,5x20	10	Nitro Demon H.Slv	45	60	30	4104,-		D
			8,5x20	11	Nitro Demon	45	60	30	3808,-		D
			8,5x20	36	Image Colt	47	60	26	3432,-		D
			8,5x20	92	Image Colt L.Gun	47	60	26	3276,-		D
JAGUAR				PCD: **5-108** Bolt - Mutter: **12x1,50**	CB: **63,4**						
XE (JA)	06.15-	17-21	7,5x17	9	Nitro Sabre G.Blk	45	46	2	3052,-		D
S 3.0t (250kW) 18"			7,5x17	36	Image Colt	47	46	-2	1956,-		D
			7,5x17	46	Image Stella	42	46	8	1812,-		D
			7,5x17	47	Image Stella M.Blk	42	46	8	1812,-		D
			7,5x17	50	Image Legend	45	46	2	1812,-	**OE-fit**	B,D
			7,5x17	92	Image Colt L.Gun	47	46	-2	1876,-		D
			8x17	17	BM Drive M.Gun	48	46	-4	1736,-		D
			8x17	48	Image Motion	42	46	8	1736,-	**OE-fit**	B,D
			8x17	49	Image Motion G.Gun	42	46	8	1736,-	**OE-fit**	B,D
			8x18	2	Nitro Sapphire FF	42	46	8	4036,-		D
			8x18	7	Nitro Spark G.Blk/Grey	47	46	-2	3476,-		D
			8x18	8	Nitro Spark G.Blk/Red	45	46	2	3476,-		
			8x18	9	Nitro Sabre G.Blk	47	46	-2	3496,-		D
			8x18	10	Nitro Demon H.Slv	48	46	-4	2972,-		D
			8x18	11	Nitro Demon	48	46	-4	2784,-		D
			8x18	16	Advanti Inizio DST	42	46	8	3828,-		D
			8x18	17	BM Drive M.Gun	48	46	-4	2296,-		D
			8x18	36	Image Colt	47	46	-2	2412,-		D
			8x18	41	Image Thor	42	46	8	2412,-		D
			8x18	46	Image Stella	42	46	8	2276,-		D
			8x18	47	Image Stella M.Blk	42	46	8	2276,-		D
			8x18	48	Image Motion	42	46	8	2204,-	**OE-fit**	B,D
			8x18	49	Image Motion G.Gun	42	46	8	2204,-	**OE-fit**	B,D
			8x18	50	Image Legend	42	46	8	2276,-	**OE-fit**	B,D
			8x18	92	Image Colt L.Gun	47	46	-2	2296,-		D
			8x19	2	Nitro Sapphire FF	42	46	8	4684,-		D
			8x19	3	Nitro Turismo FF	42	46	8	4492,-		D
			8x19	4	Nitro Turismo FF G.Gun/Pol	42	46	8	4644,-		D
			8x19	10	Nitro Demon H.Slv	48	46	-4	3624,-		D
			8x19	11	Nitro Demon	48	46	-4	3376,-		D
			8x19	16	Advanti Inizio DST	42	46	8	4412,-		D
			8x19	48	Image Motion	42	46	8	2532,-	**OE-fit**	B,D
			8x19	49	Image Motion G.Gun	42	46	8	2532,-	**OE-fit**	B,D
			8,5x19	5	Nitro Volcano G.Gun	45	46	2	4388,-		D
			8,5x19	6	Nitro Volcano	45	46	2	4632,-		D

Forts. neste side »

Bilmerke - Bilmodell	Årsmodell	Dimensjon	Felgdim.	Bilde	Felgmodell	ET Felg	ET Bil	Avvik ET	Veil. Pris eks. MVA	Merknader	B,C D, M
JAGUAR (forts.)			PCD: **5-108** Bolt - Mutter: **12x1,50** CB: **63,4**								
			8,5x19	9	Nitro Sabre G.Blk	47	46	-2	4292,-		D
			8,5x19	36	Image Colt	47	46	-2	3028,-		D
			8,5x19	41	Image Thor	47	46	-2	3048,-		D
			8,5x19	92	Image Colt L.Gun	47	46	-2	2876,-		D
			8x20	2	Nitro Sapphire FF	45	46	2	5096,-		D
			8x20	3	Nitro Turismo FF	45	46	2	4812,-		D
			8x20	4	Nitro Turismo FF G.Gun/Pol	45	46	2	4964,-		D
			8,5x20	5	Nitro Volcano G.Gun	45	46	2	4824,-	**OE-fit**	B,D,M
			8,5x20	6	Nitro Volcano	45	46	2	5164,-	**OE-fit**	B,D,M
			8,5x20	7	Nitro Spark G.Blk/Grey	47	46	-2	4660,-		D
			8,5x20	8	Nitro Spark G.Blk/Red	45	46	2	4660,-		
			8,5x20	9	Nitro Sabre G.Blk	47	46	-2	4800,-		D
			8,5x20	10	Nitro Demon H.Slv	45	46	2	4104,-		D,M
			8,5x20	11	Nitro Demon	45	46	2	3808,-		D,M
			8,5x20	36	Image Colt	47	46	-2	3432,-		D
			8,5x20	92	Image Colt L.Gun	47	46	-2	3276,-		D
JAGUAR			PCD: **5-108** Bolt - Mutter: **12x1,50** CB: **63,4**								
XF-Series (CC9)	02.08-08.15	17-20	7,5x17	9	Nitro Sabre G.Blk	45	49	8	3052,-		D
3.0, 3.0D, 3.0DS, 4.2, 5.0 18"			7,5x17	36	Image Colt	40	49	18	1956,-		
4.2 S/C, 5.0 S/C 19"			7,5x17	46	Image Stella	42	49	14	1812,-		D
XF-Series (CC9) sportbrake	10.12-	17-20	7,5x17	47	Image Stella M.Blk	42	49	14	1812,-		D
3.0D (177kW) 18"			7,5x17	50	Image Legend	45	49	8	1812,-	**OE-fit**	B,D
3.0DS (202kW) 18"			7,5x17	92	Image Colt L.Gun	40	49	18	1876,-		
XF-Series (JB)	09.15-	18-21	8x17	9	Nitro Sabre G.Blk	42	49	14	3108,-		D
3.0d (221kW), 3.0t (250kW) 18"			8x17	17	BM Drive M.Gun	42	49	14	1736,-		D
S 3.0t (280kW) 19"			8x17	40	Image Spirit	42	49	14	1476,-	**OE-fit**	B,D
XF-Series (JB) sportbrake	09.17-	18-21	8x17	48	Image Motion	42	49	14	1736,-	**OE-fit**	B,D
S 3.0 (280kW) 19"			8x17	49	Image Motion G.Gun	42	49	14	1736,-	**OE-fit**	B,D
XJ-Serie	03.03-12.09	17-20	8x18	2	Nitro Sapphire FF	42	49	14	4036,-		D
XJR 18"			8x18	7	Nitro Spark G.Blk/Grey	42	49	14	3476,-		D
XJ-Serie	01.10-	18-21	8x18	8	Nitro Spark G.Blk/Red	45	49	8	3476,-		
5.0 S/C 20"			8x18	9	Nitro Sabre G.Blk	42	49	14	3496,-		D
			8x18	10	Nitro Demon H.Slv	40	49	18	2972,-		D
			8x18	11	Nitro Demon	40	49	18	2784,-		D
			8x18	16	Advanti Inizio DST	42	49	14	3828,-		D
			8x18	17	BM Drive M.Gun	42	49	14	2296,-		D
			8x18	36	Image Colt	42	49	14	2412,-		
			8x18	40	Image Spirit	42	49	14	1912,-		D
			8x18	41	Image Thor	42	49	14	2412,-		D
			8x18	46	Image Stella	42	49	14	2276,-		D
			8x18	47	Image Stella M.Blk	42	49	14	2276,-	**OE-fit**	B,D
			8x18	48	Image Motion	42	49	14	2204,-	**OE-fit**	B,D
			8x18	49	Image Motion G.Gun	42	49	14	2204,-	**OE-fit**	B,D
			8x18	50	Image Legend	42	49	14	2276,-	**OE-fit**	B,D
			8x18	92	Image Colt L.Gun	42	49	14	2296,-		
			8x19	2	Nitro Sapphire FF	42	49	14	4684,-		D
			8x19	3	Nitro Turismo FF	42	49	14	4492,-		D
			8x19	4	Nitro Turismo FF G.Gun/Pol	42	49	14	4644,-		D
			8x19	10	Nitro Demon H.Slv	40	49	18	3624,-		D
			8x19	11	Nitro Demon	40	49	18	3376,-		D
			8x19	16	Advanti Inizio DST	42	49	14	4412,-		D
			8x19	48	Image Motion	42	49	14	2532,-	**OE-fit**	B,D
			8x19	49	Image Motion G.Gun	42	49	14	2532,-	**OE-fit**	B,D
			8,5x19	3	Nitro Turismo FF	45	49	8	4492,-		D
			8,5x19	4	Nitro Turismo FF G.Gun/Pol	45	49	8	4644,-		D
			8,5x19	5	Nitro Volcano G.Gun	40	49	18	4388,-		D
			8,5x19	6	Nitro Volcano	40	49	18	4632,-		D
			8,5x19	9	Nitro Sabre G.Blk	40	49	18	4292,-		D
			8,5x19	36	Image Colt	42	49	14	3028,-		
			8,5x19	41	Image Thor	40	49	18	3048,-		
			8,5x19	92	Image Colt L.Gun	42	49	14	2876,-		
			8x20	2	Nitro Sapphire FF	45	49	8	5096,-		D
			8,5x20	1	Nitro Throne FF	40	49	18	5060,-		D
			8,5x20	2	Nitro Sapphire FF	47	49	4	5216,-		D
			8,5x20	3	Nitro Turismo FF	45	49	8	4812,-		D
			8,5x20	4	Nitro Turismo FF G.Gun/Pol	45	49	8	4964,-		D
			8,5x20	5	Nitro Volcano G.Gun	45	49	8	4824,-	**OE-fit**	B,D
			8,5x20	6	Nitro Volcano	45	49	8	5164,-	**OE-fit**	B,D
			8,5x20	7	Nitro Spark G.Blk/Grey	42	49	14	4660,-		D
			8,5x20	8	Nitro Spark G.Blk/Red	45	49	8	4660,-		
			8,5x20	9	Nitro Sabre G.Blk	40	49	18	4800,-		D
			8,5x20	10	Nitro Demon H.Slv	45	49	8	4104,-		D
			8,5x20	11	Nitro Demon	45	49	8	3808,-		D
			8,5x20	36	Image Colt	42	49	14	3432,-		
			8,5x20	92	Image Colt L.Gun	42	49	14	3276,-		
			9x20	1	Nitro Throne FF	40	49	18	5060,-		D
			9x20	5	Nitro Volcano G.Gun	40	49	18	4824,-	**OE-fit**	B,D
			9x20	6	Nitro Volcano	40	49	18	5164,-	**OE-fit**	B,D
			9x20	15	Nitro Magnum	45	49	8	4572,-		D
			9,5x20	5	Nitro Volcano G.Gun	40	49	18	4824,-	**OE-fit**, kun bak	B,D
			9,5x20	6	Nitro Volcano	40	49	18	5164,-	**OE-fit**, kun bak	B,D
			9x21	5	Nitro Volcano G.Gun	45	49	8	5540,-	**OE-fit**	B,D
			9x21	6	Nitro Volcano	45	49	8	5996,-	**OE-fit**	B,D
			9,5x21	5	Nitro Volcano G.Gun	40	49	18	5540,-	**OE-fit**, kun bak	B,D
			9,5x21	6	Nitro Volcano	40	49	18	5996,-	**OE-fit**, kun bak	B,D

Bilmerke - Bilmodell	Årsmodell	Dimensjon	Felgdim.	Bilde	Felgmodell	ET Felg	ET Bil	Avvik ET	Veil. Pris eks. MVA	Merknader	B,C D, M
JAGUAR				PCD: **5-108** Bolt - Mutter: **14x1,50** CB: **63,4**							
E-pace (DF)	11.17-	17-21	7,5x17	9	Nitro Sabre G.Blk	45	45	0	3052,-		D
P200, D240, P250, P300 18"			7,5x17	36	Image Colt	40	45	10	1956,-		
			7,5x17	46	Image Stella	42	45	6	1812,-		D
			7,5x17	47	Image Stella M.Blk	42	45	6	1812,-		D
			7,5x17	50	Image Legend	45	45	0	1812,-		D
			7,5x17	92	Image Colt L.Gun	40	45	10	1876,-		
			8x17	9	Nitro Sabre G.Blk	42	45	6	3108,-		D
			8x17	17	BM Drive M.Gun	42	45	6	1736,-		D
			8x17	40	Image Spirit	42	45	6	1476,-	**OE-fit**	B,D
			8x17	48	Image Motion	42	45	6	1736,-		D
			8x17	49	Image Motion G.Gun	42	45	6	1736,-		D
			8x18	2	Nitro Sapphire FF	42	45	6	4036,-		D
			8x18	7	Nitro Spark G.Blk/Grey	42	45	6	3476,-		D
			8x18	8	Nitro Spark G.Blk/Red	45	45	0	3476,-		
			8x18	9	Nitro Sabre G.Blk	42	45	6	3496,-		D
			8x18	16	Advanti Inizio DST	42	45	6	3828,-		D
			8x18	17	BM Drive M.Gun	42	45	6	2296,-		D
			8x18	36	Image Colt	42	45	6	2412,-		
			8x18	40	Image Spirit	42	45	6	1912,-		D
			8x18	41	Image Thor	42	45	6	2412,-		D
			8x18	46	Image Stella	42	45	6	2276,-		D
			8x18	47	Image Stella M.Blk	42	45	6	2276,-		D
			8x18	48	Image Motion	42	45	6	2204,-		D
			8x18	49	Image Motion G.Gun	42	45	6	2204,-		D
			8x18	50	Image Legend	42	45	6	2276,-		D
			8x18	92	Image Colt L.Gun	42	45	6	2296,-		
			8x19	2	Nitro Sapphire FF	42	45	6	4684,-		D
			8x19	3	Nitro Turismo FF	42	45	6	4492,-		D
			8x19	4	Nitro Turismo FF G.Gun/Pol	42	45	6	4644,-		D
			8x19	16	Advanti Inizio DST	42	45	6	4412,-		D
			8x19	48	Image Motion	42	45	6	2532,-		D
			8x19	49	Image Motion G.Gun	42	45	6	2532,-		D
			8,5x19	3	Nitro Turismo FF	45	45	0	4492,-		D
			8,5x19	4	Nitro Turismo FF G.Gun/Pol	45	45	0	4644,-		D
			8,5x19	5	Nitro Volcano G.Gun	45	45	0	4388,-		D
			8,5x19	6	Nitro Volcano	45	45	0	4632,-		D
			8,5x19	9	Nitro Sabre G.Blk	40	45	10	4292,-		D
			8,5x19	36	Image Colt	42	45	6	3028,-		
			8,5x19	41	Image Thor	40	45	10	3048,-		
			8,5x19	92	Image Colt L.Gun	42	45	6	2876,-		
			8x20	2	Nitro Sapphire FF	45	45	0	5096,-		D
			8x20	3	Nitro Turismo FF	45	45	0	4812,-		D
			8x20	4	Nitro Turismo FF G.Gun/Pol	45	45	0	4964,-		D
			8,5x20	1	Nitro Throne FF	40	45	10	5060,-		D
			8,5x20	3	Nitro Turismo FF	45	45	0	4812,-		D
			8,5x20	4	Nitro Turismo FF G.Gun/Pol	45	45	0	4964,-		D
			8,5x20	5	Nitro Volcano G.Gun	45	45	0	4824,-		D
			8,5x20	6	Nitro Volcano	45	45	0	5164,-		D
			8,5x20	7	Nitro Spark G.Blk/Grey	42	45	6	4660,-		D
			8,5x20	8	Nitro Spark G.Blk/Red	45	45	0	4660,-		
			8,5x20	9	Nitro Sabre G.Blk	40	45	10	4800,-		D
			8,5x20	10	Nitro Demon H.Slv	45	45	0	4104,-		D
			8,5x20	11	Nitro Demon	45	45	0	3808,-		D
			8,5x20	36	Image Colt	42	45	6	3432,-		
			8,5x20	92	Image Colt L.Gun	42	45	6	3276,-		
			9x20	12	Nitro Edge M.Blk	45	45	0	4220,-		M
			9x20	15	Nitro Magnum	45	45	0	4572,-		D,M
			9x21	5	Nitro Volcano G.Gun	45	45	0	5540,-		D,M
			9x21	6	Nitro Volcano	45	45	0	5996,-		D,M
			9x22	12	Nitro Edge M.Blk	45	45	0	4888,-		M
			9x22	15	Nitro Magnum	45	45	0	5420,-		D,M
JAGUAR				PCD: **5-108** Bolt - Mutter: **14x1,50** CB: **63,4**							
F-pace (DC)	10.15-	18-22	8x18	2	Nitro Sapphire FF	42	45	6	4036,-		D
3.0D (220kW) 19"			8x18	7	Nitro Spark G.Blk/Grey	42	45	6	3476,-		D
3.0 S/C (250/279kW) 19"			8x18	8	Nitro Spark G.Blk/Red	45	45	0	3476,-		
			8x18	9	Nitro Sabre G.Blk	42	45	6	3496,-		D
			8x18	10	Nitro Demon H.Slv	40	45	10	2972,-		D
			8x18	11	Nitro Demon	40	45	10	2784,-		D
			8x18	16	Advanti Inizio DST	42	45	6	3828,-		D
			8x18	17	BM Drive M.Gun	42	45	6	2296,-		D
			8x18	36	Image Colt	42	45	6	2412,-		
			8x18	40	Image Spirit	42	45	6	1912,-		D
			8x18	41	Image Thor	42	45	6	2412,-		D
			8x18	46	Image Stella	42	45	6	2276,-		D
			8x18	47	Image Stella M.Blk	42	45	6	2276,-		D
			8x18	48	Image Motion	42	45	6	2204,-	**OE-fit**	B,D
			8x18	49	Image Motion G.Gun	42	45	6	2204,-	**OE-fit**	B,D
			8x18	50	Image Legend	42	45	6	2276,-	**OE-fit**	B,D
			8x18	92	Image Colt L.Gun	42	45	6	2296,-		
			8x19	2	Nitro Sapphire FF	42	45	6	4684,-		D
			8x19	3	Nitro Turismo FF	42	45	6	4492,-		D
			8x19	4	Nitro Turismo FF G.Gun/Pol	42	45	6	4644,-		D
			8x19	10	Nitro Demon H.Slv	40	45	10	3624,-		D
			8x19	11	Nitro Demon	40	45	10	3376,-		D
			8x19	16	Advanti Inizio DST	42	45	6	4412,-		D
			8x19	48	Image Motion	42	45	6	2532,-	**OE-fit**	B,D

Forts. neste side »

Bilmerke - Bilmodell	Årsmodell	Dimensjon	Felgdim.	Bilde	Felgmodell	ET Felg	ET Bil	Avvik ET	Veil. Pris eks. MVA	Merknader	B,C D, M
JAGUAR (forts.)			PCD: **5-108** Bolt - Mutter: **14x1,50** CB: **63,4**								
			8x19	49	Image Motion G.Gun	42	45	6	2532,-	**OE-fit**	B,D
			8,5x19	3	Nitro Turismo FF	45	45	0	4492,-		D
			8,5x19	4	Nitro Turismo FF G.Gun/Pol	45	45	0	4644,-		D
			8,5x19	5	Nitro Volcano G.Gun	40	45	10	4388,-		D
			8,5x19	6	Nitro Volcano	40	45	10	4632,-		D
			8,5x19	9	Nitro Sabre G.Blk	40	45	10	4292,-		D
			8,5x19	36	Image Colt	42	45	6	3028,-		
			8,5x19	41	Image Thor	40	45	10	3048,-		
			8,5x19	92	Image Colt L.Gun	42	45	6	2876,-		
			9x19	12	Nitro Edge M.Blk	45	45	0	3884,-		
			8x20	2	Nitro Sapphire FF	45	45	0	5096,-		D
			8,5x20	1	Nitro Throne FF	40	45	10	5060,-		D
			8,5x20	3	Nitro Turismo FF	45	45	0	4812,-		D
			8,5x20	4	Nitro Turismo FF G.Gun/Pol	45	45	0	4964,-		D
			8,5x20	5	Nitro Volcano G.Gun	45	45	0	4824,-	**OE-fit**	B,D
			8,5x20	6	Nitro Volcano	45	45	0	5164,-	**OE-fit**	B,D
			8,5x20	7	Nitro Spark G.Blk/Grey	42	45	6	4660,-		D
			8,5x20	8	Nitro Spark G.Blk/Red	45	45	0	4660,-		
			8,5x20	9	Nitro Sabre G.Blk	40	45	10	4800,-		D
			8,5x20	10	Nitro Demon H.Slv	45	45	0	4104,-		D
			8,5x20	11	Nitro Demon	45	45	0	3808,-		D
			8,5x20	36	Image Colt	42	45	6	3432,-		
			8,5x20	92	Image Colt L.Gun	42	45	6	3276,-		
			9x20	1	Nitro Throne FF	40	45	10	5060,-		D
			9x20	5	Nitro Volcano G.Gun	40	45	10	4824,-	**OE-fit**	B,D
			9x20	6	Nitro Volcano	40	45	10	5164,-	**OE-fit**	B,D
			9x20	12	Nitro Edge M.Blk	45	45	0	4220,-		
			9x20	15	Nitro Magnum	38	45	14	4572,-		D,M
			9,5x20	5	Nitro Volcano G.Gun	40	45	10	4824,-	**OE-fit**	B,D,M
			9,5x20	6	Nitro Volcano	40	45	10	5164,-	**OE-fit**	B,D,M
			9x21	5	Nitro Volcano G.Gun	45	45	0	5540,-	**OE-fit**	B,D
			9x21	6	Nitro Volcano	45	45	0	5996,-	**OE-fit**	B,D
			9,5x21	5	Nitro Volcano G.Gun	40	45	10	5540,-	**OE-fit**	B,D,M
			9,5x21	6	Nitro Volcano	40	45	10	5996,-	**OE-fit**	B,D,M
			9x22	1	Nitro Throne FF	40	45	10	6276,-		D
			9x22	12	Nitro Edge M.Blk	45	45	0	4888,-		
			9x22	15	Nitro Magnum	38	45	14	5420,-		D,M
			9,5x22	1	Nitro Throne FF	42	45	6	6276,-		D
			10,5x22	15	Nitro Magnum	40	45	10	5420,-	Kun bak	D,M
JAGUAR			PCD: **5-108** Bolt - Mutter: **14x1,50** CB: **63,4**								
I-pace (DH)	08.18-	18-22	8x18	7	Nitro Spark G.Blk/Grey	47	52	10	3476,-		D
			8x18	9	Nitro Sabre G.Blk	47	52	10	3496,-		D
			8x18	48	Image Motion	50	52	4	2204,-		D
			8x18	49	Image Motion G.Gun	50	52	4	2204,-		D
			8x18	50	Image Legend	50	52	4	2276,-		D
			8x19	2	Nitro Sapphire FF	42	52	20	4684,-		D
			8x19	3	Nitro Turismo FF	50	52	4	4492,-		D
			8x19	4	Nitro Turismo FF G.Gun/Pol	50	52	4	4644,-		D
			8x19	10	Nitro Demon H.Slv	48	52	8	3624,-		D
			8x19	11	Nitro Demon	48	52	8	3376,-		D
			8x19	48	Image Motion	50	52	4	2532,-		D
			8x19	49	Image Motion G.Gun	50	52	4	2532,-		D
			8,5x19	3	Nitro Turismo FF	45	52	14	4492,-		D
			8,5x19	4	Nitro Turismo FF G.Gun/Pol	45	52	14	4644,-		D
			8,5x19	9	Nitro Sabre G.Blk	47	52	10	4292,-		D
			8,5x19	36	Image Colt	47	52	10	3028,-		D
			8,5x19	92	Image Colt L.Gun	47	52	10	2876,-		D
			9x19	12	Nitro Edge M.Blk	45	52	14	3884,-		
			8x20	2	Nitro Sapphire FF	50	52	4	5096,-		D
			8x20	3	Nitro Turismo FF	45	52	14	4812,-		D
			8x20	4	Nitro Turismo FF G.Gun/Pol	45	52	14	4964,-		D
			8,5x20	1	Nitro Throne FF	40	52	24	5060,-		D
			8,5x20	2	Nitro Sapphire FF	47	52	10	5216,-		D
			8,5x20	3	Nitro Turismo FF	45	52	14	4812,-		D
			8,5x20	4	Nitro Turismo FF G.Gun/Pol	45	52	14	4964,-		D
			8,5x20	7	Nitro Spark G.Blk/Grey	47	52	10	4660,-		D
			8,5x20	8	Nitro Spark G.Blk/Red	45	52	14	4660,-		
			8,5x20	9	Nitro Sabre G.Blk	47	52	10	4800,-		D
			8,5x20	10	Nitro Demon H.Slv	45	52	14	4104,-		D
			8,5x20	11	Nitro Demon	45	52	14	3808,-		D
			8,5x20	36	Image Colt	47	52	10	3432,-		D
			9x20	12	Nitro Edge M.Blk	45	52	14	4220,-		
			9x20	15	Nitro Magnum	45	52	14	4572,-		D
			9x22	12	Nitro Edge M.Blk	45	52	14	4888,-		
			9x22	15	Nitro Magnum	45	52	14	5420,-		D
JEEP			PCD: **5-114,3** Bolt - Mutter: **12x1,50** CB: **67,1**								
Compass (PK)	07.06-07.17	16-20	6,5x16	36	Image Colt	35	39	8	1624,-		
Patriot	05.07-12.16	16-20	6,5x16	92	Image Colt L.Gun	35	39	8	1548,-		
			7,5x17	9	Nitro Sabre G.Blk	35	39	8	3052,-		
			7,5x17	36	Image Colt	35	39	8	1956,-		
			7,5x17	92	Image Colt L.Gun	35	39	8	1876,-		
			7,5x18	2	Nitro Sapphire FF	35	39	8	3944,-		
			8x18	7	Nitro Spark G.Blk/Grey	35	39	8	3476,-		
			8x18	8	Nitro Spark G.Blk/Red	35	39	8	3476,-		
			8x18	36	Image Colt	35	39	8	2412,-		
			8x18	92	Image Colt L.Gun	35	39	8	2296,-		

Forts. neste side »

Bilmerke - Bilmodell	Årsmodell	Dimensjon	Felgdim.	Bilde	Felgmodell	ET Felg	ET Bil	Avvik ET	Veil. Pris eks. MVA	Merknader	B,C D, M
JEEP (forts.)				PCD: **5-114,3** Bolt - Mutter: **12x1,50** CB: **67,1**							
			7,5x19	2	Nitro Sapphire FF	35	39	8	4572,-		
			8x19	11	Nitro Demon	38	39	2	3376,-		
			8x19	16	Advanti Inizio DST	35	39	8	4412,-		
			8,5x19	5	Nitro Volcano G.Gun	35	39	8	4388,-		
			8,5x19	6	Nitro Volcano	35	39	8	4632,-		
			8,5x19	9	Nitro Sabre G.Blk	35	39	8	4292,-		
			8,5x19	36	Image Colt	35	39	8	3028,-		M
			8,5x19	92	Image Colt L.Gun	35	39	8	2876,-		M
			8x20	2	Nitro Sapphire FF	35	39	8	5096,-		
			8,5x20	1	Nitro Throne FF	40	39	-2	5060,-		
			8,5x20	5	Nitro Volcano G.Gun	35	39	8	4824,-		
			8,5x20	6	Nitro Volcano	35	39	8	5164,-		
			8,5x20	9	Nitro Sabre G.Blk	35	39	8	4800,-		
			8,5x20	11	Nitro Demon	38	39	2	3808,-		
			8,5x20	36	Image Colt	35	39	8	3432,-		M
			8,5x20	92	Image Colt L.Gun	35	39	8	3276,-		M
JEEP				PCD: **5-127** Bolt - Mutter: **1/2"** CB: **71,5**							
Wrangler (JK)	03.07-11.17	17-22	8x18	68	BM Macho	40	44	8	3300,-		D
(Vissa modeller kan ha 16")			8x18	69	BM Macho M.Blk	40	44	8	3300,-		D
Wrangler (JK) Unlimited	03.07-11.17	17-22	9x20	12	Nitro Edge M.Blk	40	44	8	4220,-		D
(Vissa modeller kan ha 16")			9x22	12	Nitro Edge M.Blk	40	44	8	4888,-		D
JEEP				PCD: **5-127** Bolt - Mutter: **14x1,50** CB: **71,5**							
Gladiator (JT)	04.19-	17-22	8x18	68	BM Macho	40	44	8	3300,-		D
Wrangler (JL)	12.17-	17-22	8x18	69	BM Macho M.Blk	40	44	8	3300,-		D
			9x20	12	Nitro Edge M.Blk	40	44	8	4220,-		D
			9x22	12	Nitro Edge M.Blk	40	44	8	4888,-		D
JEEP				PCD: **5-114,3** Bolt - Mutter: **1/2"** CB: **71,5**							
Cherokee	01.02-02.08	16-20	6,5x16	36	Image Colt	35	42	14	1624,-		
Cherokee (KK)	03.08-08.12	16-22	6,5x16	92	Image Colt L.Gun	35	42	14	1548,-		
			7,5x17	9	Nitro Sabre G.Blk	35	42	14	3052,-		
			7,5x17	36	Image Colt	35	42	14	1956,-		
			7,5x17	92	Image Colt L.Gun	35	42	14	1876,-		
			7,5x18	2	Nitro Sapphire FF	35	42	14	3944,-		
			8x18	7	Nitro Spark G.Blk/Grey	35	42	14	3476,-		
			8x18	8	Nitro Spark G.Blk/Red	35	42	14	3476,-		
			8x18	36	Image Colt	35	42	14	2412,-		
			8x18	92	Image Colt L.Gun	35	42	14	2296,-		
			7,5x19	2	Nitro Sapphire FF	35	42	14	4572,-		
			8x19	11	Nitro Demon	38	42	8	3376,-		
			8x19	16	Advanti Inizio DST	35	42	14	4412,-		
			8,5x19	5	Nitro Volcano G.Gun	35	42	14	4388,-		
			8,5x19	6	Nitro Volcano	35	42	14	4632,-		
			8,5x19	9	Nitro Sabre G.Blk	35	42	14	4292,-		
			8,5x19	36	Image Colt	35	42	14	3028,-		
			8,5x19	92	Image Colt L.Gun	35	42	14	2876,-		
			8x20	2	Nitro Sapphire FF	35	42	14	5096,-		
			8,5x20	1	Nitro Throne FF	40	42	4	5060,-		
			8,5x20	5	Nitro Volcano G.Gun	35	42	14	4824,-		
			8,5x20	6	Nitro Volcano	35	42	14	5164,-		
			8,5x20	9	Nitro Sabre G.Blk	35	42	14	4800,-		
			8,5x20	11	Nitro Demon	38	42	8	3808,-		
			8,5x20	36	Image Colt	35	42	14	3432,-		
			8,5x20	92	Image Colt L.Gun	35	42	14	3276,-		
JEEP				PCD: **5-110** Bolt - Mutter: **12x1,25B** CB: **65,1**							
Cherokee (KL)	11.13-	17-21	6,5x16	36	Image Colt	40	40	0	1624,-	**OE-fit**	B,D
Compass (MX)	08.17-	16-20	6,5x16	48	Image Motion	40	40	0	1468,-	**OE-fit**	B,D
1.4 Turbo (125kW) 17"			6,5x16	92	Image Colt L.Gun	40	40	0	1548,-	**OE-fit**	B,D
2.0D (103 & 125kW) 17"			7x17	48	Image Motion	40	40	0	1736,-	**OE-fit**	B,D
Renegade (BU)	08.14-	16-20	7,5x17	36	Image Colt	40	40	0	1956,-	**OE-fit**	B,D
1.6, 2.0 17"			7,5x17	92	Image Colt L.Gun	40	40	0	1876,-	**OE-fit**	B,D
			8x17	48	Image Motion	34	40	12	1736,-		D
			8x18	11	Nitro Demon	40	40	0	2784,-	Eksenterbolter	D
			8x18	36	Image Colt	40	40	0	2412,-	**OE-fit**	B,D
			8x18	48	Image Motion	34	40	12	2204,-		D
			8x18	92	Image Colt L.Gun	40	40	0	2296,-	**OE-fit**	B,D
			8x19	11	Nitro Demon	40	40	0	3376,-	Eksenterbolter	D
JEEP				PCD: **5-127** Bolt - Mutter: **1/2"** CB: **71,5**							
Commander	01.06-12.10	17-22	7x16	65	CSP Work	40	51	22	2556,-		D
Grand Cherokee	07.99-10.04	16-22	8x18	68	BM Macho	40	51	22	3300,-		D
Grand Cherokee	11.04-10.10	17-22	8x18	69	BM Macho M.Blk	40	51	22	3300,-		D
			9x20	12	Nitro Edge M.Blk	50	51	2	4220,-		D
			9x20	72	Ballistic Dakota	50	51	2	4624,-		D
			9x22	12	Nitro Edge M.Blk	50	51	2	4888,-		D
			9x22	72	Ballistic Dakota	50	51	2	5128,-		D
JEEP				PCD: **5-127** Bolt - Mutter: **14x1,50** CB: **71,5**							
Grand Cherokee (WL)	11.10-	18-22	8x18	68	BM Macho	40	56	32	3300,-		D
			8x18	69	BM Macho M.Blk	40	56	32	3300,-		D
			9x20	12	Nitro Edge M.Blk	50	56	12	4220,-		D
			9x20	72	Ballistic Dakota	50	56	12	4624,-		D
			10x20	12	Nitro Edge M.Blk	45	56	22	4220,-		D
			9x22	12	Nitro Edge M.Blk	50	56	12	4888,-		D
			9x22	72	Ballistic Dakota	50	56	12	5128,-		D
			10x22	12	Nitro Edge M.Blk	45	56	22	4888,-		D

Bilmerke - Bilmodell	Årsmodell	Dimensjon	Felgdim.	Bilde	Felgmodell	ET Felg	ET Bil	Avvik ET	Veil. Pris eks. MVA	Merknader	B,C D, M
KIA				PCD: **4-100** Bolt - Mutter: **12x1,50**	CB: **54,1**						
Picanto	04.04-01.08	13-15	5x13	45	Image Ride	38	46	16	1336,-		
Picanto (BA)	02.08-03.17	13-17	5,5x14	37	Image Comet	45	46	2	1264,-	**OE-fit**	B,D
1.1CRDi 14"			5,5x14	45	Image Ride	38	46	16	1392,-		
			6x15	19	ATS Streetrallye Slv	38	46	16	1960,-		
			6x15	37	Image Comet	45	46	2	1316,-	**OE-fit**	B,D
			6x15	42	Image Brio	40	46	12	1304,-		B
			6x15	45	Image Ride	38	46	16	1552,-		
			6,5x16	19	ATS Streetrallye Slv	40	46	12	2240,-		M
			6,5x16	34	CSP 16	40	46	12	1468,-		M
			6,5x16	42	Image Brio	38	46	16	1524,-		M
			7x17	42	Image Brio	40	46	12	1832,-		B,M
KIA				PCD: **4-100** Bolt - Mutter: **12x1,50**	CB: **54,1**						
Picanto (JA)	04.17-	14-17	5,5x14	37	Image Comet	45	51	12	1264,-	**OE-fit**	B,D
			5,5x14	45	Image Ride	38	51	26	1392,-		
			6x15	19	ATS Streetrallye Slv	45	51	12	1960,-		
			6x15	34	CSP 16	51	51	0	1228,-	**OE-fit**	B,D
			6x15	35	CSP 16 M.Gun	51	51	0	1228,-	**OE-fit**	B,D
			6x15	37	Image Comet	45	51	12	1316,-	**OE-fit**	B,D
			6x15	42	Image Brio	40	51	22	1304,-		B
			6x15	45	Image Ride	38	51	26	1552,-		
			6x16	19	ATS Streetrallye Slv	45	51	12	2240,-		
			6x16	37	Image Comet	46	51	10	1536,-	**OE-fit**	B,D
			6x16	38	Image Comet Slv	46	51	10	1536,-	**OE-fit**	B,D
			6,5x16	19	ATS Streetrallye Slv	40	51	22	2240,-		
			6,5x16	34	CSP 16	40	51	22	1468,-		
			6,5x16	42	Image Brio	38	51	26	1524,-		B
			7x17	18	ATS Streetrallye Blk	45	51	12	3344,-		
			7x17	42	Image Brio	40	51	22	1832,-		B
KIA				PCD: **4-100** Bolt - Mutter: **12x1,50**	CB: **54,1**						
Rio	09.00-07.05	13-18	5x13	45	Image Ride	38	45	14	1336,-		
(bult 12x1.50)			5,5x14	37	Image Comet	45	45	0	1264,-	**OE-fit**	B,D
Rio (DE)	08.05-07.11	14-18	5,5x14	45	Image Ride	38	45	14	1392,-		
			6x15	19	ATS Streetrallye Slv	38	45	14	1960,-		
			6x15	37	Image Comet	45	45	0	1316,-	**OE-fit**	B,D
			6x15	42	Image Brio	40	45	10	1304,-		B
			6x15	45	Image Ride	38	45	14	1552,-		
			6x16	37	Image Comet	40	45	10	1536,-		B
			6x16	38	Image Comet Slv	40	45	10	1536,-		B
			6,5x16	19	ATS Streetrallye Slv	40	45	10	2240,-		
			6,5x16	34	CSP 16	40	45	10	1468,-		
			6,5x16	42	Image Brio	38	45	14	1524,-		B
			7x17	42	Image Brio	40	45	10	1832,-		B
KIA				PCD: **4-100** Bolt - Mutter: **12x1,50**	CB: **54,1**						
Rio (UB)	08.11-12.16	15-18	5,5x15	34	CSP 16	36	43	14	1228,-	**OE-fit**	B,D
			6x15	19	ATS Streetrallye Slv	38	43	10	1960,-		
			6x15	42	Image Brio	40	43	6	1304,-		B
			6x15	45	Image Ride	38	43	10	1552,-		
			6x16	37	Image Comet	40	43	6	1536,-		B
			6x16	38	Image Comet Slv	40	43	6	1536,-		B
			6,5x16	19	ATS Streetrallye Slv	40	43	6	2240,-		
			6,5x16	34	CSP 16	40	43	6	1468,-		
			6,5x16	42	Image Brio	38	43	10	1524,-		B
			7x17	42	Image Brio	40	43	6	1832,-		B
KIA				PCD: **4-100** Bolt - Mutter: **12x1,50**	CB: **54,1**						
Rio (YB)	01.17-	15-18	6x15	19	ATS Streetrallye Slv	45	49	8	1960,-		
Stonic (YB)	07.17-	15-18	6x15	34	CSP 16	47	49	4	1228,-	**OE-fit**	B,D
			6x15	35	CSP 16 M.Gun	46	49	6	1228,-	**OE-fit**	B,D
			6x15	37	Image Comet	45	49	8	1316,-	**OE-fit**	B,D
			6x15	42	Image Brio	40	49	18	1304,-		B
			6x15	45	Image Ride	38	49	22	1552,-		
			6x16	19	ATS Streetrallye Slv	45	49	8	2240,-		
			6x16	37	Image Comet	46	49	6	1536,-	**OE-fit**	B,D
			6x16	38	Image Comet Slv	46	49	6	1536,-	**OE-fit**	B,D
			6,5x16	19	ATS Streetrallye Slv	40	49	18	2240,-		
			6,5x16	34	CSP 16	40	49	18	1468,-		
			6,5x16	42	Image Brio	38	49	22	1524,-		B
			7x17	18	ATS Streetrallye Blk	45	49	8	3344,-		
			7x17	42	Image Brio	40	49	18	1832,-		B
			7,5x18	18	ATS Streetrallye Blk	38	49	22	4180,-		M
KIA				PCD: **5-114,3** Bolt - Mutter: **12x1,50**	CB: **67,1**						
Carens (FG)	09.06-10.12	15-20	6x15	34	CSP 16	48	46	-4	1228,-	**OE-fit**	B,D
Carnival	03.99-05.06	15-20	6x15	35	CSP 16 M.Gun	46	46	0	1228,-	**OE-fit**	B,D
Ceed (CD)	06.18-	15-20	6x15	48	Image Motion	45	46	2	1224,-	**OE-fit**	B,D
1.0T, 1.4T, 1.6CRDi 16"			6,5x16	34	CSP 16	50	46	-8	1468,-	**OE-fit**	B,D
Ceed (CD) sw	08.18-	15-20	6,5x16	35	CSP 16 M.Gun	50	46	-8	1468,-	**OE-fit**	B,D
1.0T, 1.4T, 1.6CRDi 16"			6,5x16	36	Image Colt	45	46	2	1624,-		B
Ceed (ED)	03.07-05.12	15-20	6,5x16	40	Image Spirit	45	46	2	1264,-	**OE-fit**	B,D
Ceed (ED) sw	06.07-05.12	15-20	6,5x16	46	Image Stella	45	46	2	1548,-	**OE-fit**	B,D
Ceed (JD)	06.12-05.18	15-20	6,5x16	47	Image Stella M.Blk	45	46	2	1548,-	**OE-fit**	B,D
1.6, 1.6CRDi 16"			6,5x16	48	Image Motion	45	46	2	1468,-	**OE-fit**	B,D
(Biler med 300mm bremser 16")			6,5x16	49	Image Motion G.Gun	45	46	2	1468,-	**OE-fit**	B,D
Ceed (JD) sw	09.12-05.18	15-20	6,5x16	50	Image Legend	45	46	2	1544,-	**OE-fit**	B,D
1.6, 1.6CRDi 16"			6,5x16	92	Image Colt L.Gun	45	46	2	1548,-		B
(Biler med 300mm bremser 16")			7x16	17	BM Drive M.Gun	45	46	2	1476,-		D
Magentis	09.05-11.11	16-20	7x17	17	BM Drive M.Gun	50	46	-8	1736,-		D

Forts. neste side »

Bilmerke - Bilmodell	Årsmodell	Dimensjon	Felgdim.	Bilde	Felgmodell	ET Felg	ET Bil	Avvik ET	Veil. Pris eks. MVA	Merknader	B,C D, M
KIA (forts.)				PCD: **5-114,3** Bolt - Mutter: **12x1,50** CB: **67,1**							
Opirus (LD)	05.03-09.07	16-20	7x17	34	CSP 16	53	46	-14	1836,-	**OE-fit**	B,D
Pro Ceed (ED)	02.08-05.12	15-20	7x17	35	CSP 16 M.Gun	53	46	-14	1836,-	**OE-fit**	B,D
Pro Ceed (JD)	06.12-11.18	15-20	7x17	40	Image Spirit	45	46	2	1476,-	**OE-fit**	B,D
1.6, 1.6CRDi 16"			7x17	46	Image Stella	50	46	-8	1812,-	**OE-fit**	B,D
GT (150kW) 16"			7x17	47	Image Stella M.Blk	50	46	-8	1812,-	**OE-fit**	B,D
Soul (AM)	01.09-02.14	15-20	7x17	48	Image Motion	45	46	2	1736,-	**OE-fit**	B,D
Soul (PS)	03.14-	16-20	7x17	49	Image Motion G.Gun	45	46	2	1736,-	**OE-fit**	B,D
GT (150kW) 18"			7,5x17	9	Nitro Sabre G.Blk	45	46	2	3052,-		B
Venga (YN)	01.10-	15-19	7,5x17	36	Image Colt	45	46	2	1956,-		B
			7,5x17	50	Image Legend	45	46	2	1812,-	**OE-fit**	B,D
			7,5x17	92	Image Colt L.Gun	45	46	2	1876,-		B
			7,5x18	2	Nitro Sapphire FF	45	46	2	3944,-		B
			7,5x18	34	CSP 16	48	46	-4	2444,-	**OE-fit**	B,D
			7,5x18	35	CSP 16 M.Gun	48	46	-4	2444,-	**OE-fit**	B,D
			7,5x18	46	Image Stella	45	46	2	2276,-	**OE-fit**	B,D
			7,5x18	47	Image Stella M.Blk	45	46	2	2276,-	**OE-fit**	B,D
			8x18	7	Nitro Spark G.Blk/Grey	45	46	2	3476,-		B
			8x18	8	Nitro Spark G.Blk/Red	45	46	2	3476,-		B
			8x18	9	Nitro Sabre G.Blk	45	46	2	3496,-		B
			8x18	11	Nitro Demon	48	46	-4	2784,-		
			8x18	16	Advanti Inizio DST	45	46	2	3828,-		B
			8x18	36	Image Colt	45	46	2	2412,-		B
			8x18	48	Image Motion	45	46	2	2204,-	**OE-fit**	B,D
			8x18	49	Image Motion G.Gun	45	46	2	2204,-	**OE-fit**	B,D
			8x18	50	Image Legend	45	46	2	2276,-	**OE-fit**	B,D
			8x18	92	Image Colt L.Gun	45	46	2	2296,-		B
			7,5x19	2	Nitro Sapphire FF	45	46	2	4572,-		B
			8x19	16	Advanti Inizio DST	45	46	2	4412,-		B
			8x20	2	Nitro Sapphire FF	45	46	2	5096,-		B
KIA				PCD: **5-114,3** Bolt - Mutter: **12x1,50** CB: **67,1**							
XCeed (CD)	09.19-	16-20	6,5x16	34	CSP 16	40	45	10	1468,-	**OE-fit**	B,D
(Kun biler med 16" orig.			6,5x16	35	CSP 16 M.Gun	40	45	10	1468,-	**OE-fit**	B,D
kan ha 16", andre 17")			6,5x16	36	Image Colt	35	45	20	1624,-		B
XCeed (CD) GT	12.19-	18-20	6,5x16	92	Image Colt L.Gun	35	45	20	1548,-		B
			7x17	34	CSP 16	45	45	0	1836,-	**OE-fit**	B,D
			7x17	40	Image Spirit	45	45	0	1476,-	**OE-fit**	B,D
			7x17	46	Image Stella	45	45	0	1812,-	**OE-fit**	B,D
			7x17	47	Image Stella M.Blk	45	45	0	1812,-	**OE-fit**	B,D
			7x17	48	Image Motion	45	45	0	1736,-	**OE-fit**	B,D
			7x17	49	Image Motion G.Gun	45	45	0	1736,-	**OE-fit**	B,D
			7,5x17	9	Nitro Sabre G.Blk	45	45	0	3052,-		B
			7,5x17	36	Image Colt	45	45	0	1956,-		B
			7,5x17	50	Image Legend	45	45	0	1812,-	**OE-fit**	B,D
			7,5x17	92	Image Colt L.Gun	45	45	0	1876,-		B
			7,5x18	2	Nitro Sapphire FF	45	45	0	3944,-		B
			7,5x18	34	CSP 16	45	45	0	2444,-	**OE-fit**	B,D
			7,5x18	35	CSP 16 M.Gun	45	45	0	2444,-	**OE-fit**	B,D
			7,5x18	46	Image Stella	45	45	0	2276,-	**OE-fit**	B,D
			7,5x18	47	Image Stella M.Blk	45	45	0	2276,-	**OE-fit**	B,D
			8x18	7	Nitro Spark G.Blk/Grey	45	45	0	3476,-		B
			8x18	8	Nitro Spark G.Blk/Red	45	45	0	3476,-		B
			8x18	9	Nitro Sabre G.Blk	45	45	0	3496,-		B
			8x18	16	Advanti Inizio DST	45	45	0	3828,-		B
			8x18	36	Image Colt	45	45	0	2412,-		B
			8x18	48	Image Motion	45	45	0	2204,-	**OE-fit**	B,D
			8x18	49	Image Motion G.Gun	45	45	0	2204,-	**OE-fit**	B,D
			8x18	50	Image Legend	45	45	0	2276,-	**OE-fit**	B,D
			8x18	92	Image Colt L.Gun	45	45	0	2296,-		B
			7,5x19	2	Nitro Sapphire FF	45	45	0	4572,-		B
			8x19	16	Advanti Inizio DST	45	45	0	4412,-		B
			8,5x19	36	Image Colt	45	45	0	3028,-		B
			8,5x19	92	Image Colt L.Gun	45	45	0	2876,-		B
			8x20	2	Nitro Sapphire FF	45	45	0	5096,-		B
			8,5x20	36	Image Colt	45	45	0	3432,-		B
			8,5x20	92	Image Colt L.Gun	45	45	0	3276,-		B,M
KIA				PCD: **5-114,3** Bolt - Mutter: **12x1,50** CB: **67,1**							
Pro Ceed (CD)	12.18-	17-20	7x17	17	BM Drive M.Gun	50	53	6	1736,-	**OE-fit**	B,D
GT (150kW) 18"			7x17	34	CSP 16	53	53	0	1836,-	**OE-fit**	B,D
			7x17	35	CSP 16 M.Gun	53	53	0	1836,-	**OE-fit**	B,D
			7x17	40	Image Spirit	45	53	16	1476,-	**OE-fit**	B,D
			7x17	46	Image Stella	50	53	6	1812,-	**OE-fit**	B,D
			7x17	47	Image Stella M.Blk	50	53	6	1812,-	**OE-fit**	B,D
			7x17	48	Image Motion	45	53	16	1736,-	**OE-fit**	B,D
			7x17	49	Image Motion G.Gun	45	53	16	1736,-	**OE-fit**	B,D
			7,5x17	9	Nitro Sabre G.Blk	45	53	16	3052,-		B
			7,5x17	36	Image Colt	45	53	16	1956,-		B
			7,5x17	50	Image Legend	45	53	16	1812,-	**OE-fit**	B,D
			7,5x17	92	Image Colt L.Gun	45	53	16	1876,-		B
			7,5x18	2	Nitro Sapphire FF	45	53	16	3944,-		B
			7,5x18	34	CSP 16	55	53	-4	2444,-	**OE-fit**	B,D
			7,5x18	35	CSP 16 M.Gun	55	53	-4	2444,-	**OE-fit**	B,D
			7,5x18	46	Image Stella	45	53	16	2276,-	**OE-fit**	B,D
			7,5x18	47	Image Stella M.Blk	45	53	16	2276,-	**OE-fit**	B,D
			8x18	9	Nitro Sabre G.Blk	45	53	16	3496,-		B
			8x18	11	Nitro Demon	48	53	10	2784,-		B
			8x18	16	Advanti Inizio DST	45	53	16	3828,-		B

Forts. neste side »

Bilmerke - Bilmodell	Årsmodell	Dimensjon	Felgdim.	Bilde	Felgmodell	ET Felg	ET Bil	Avvik ET	Veil. Pris eks. MVA	Merknader	B,C D, M
KIA (forts.)			PCD: **5-114,3** Bolt - Mutter: **12x1,50** CB: **67,1**								
			8x18	36	Image Colt	45	53	16	2412,-		B
			8x18	48	Image Motion	45	53	16	2204,-	**OE-fit**	B,D
			8x18	49	Image Motion G.Gun	45	53	16	2204,-	**OE-fit**	B,D
			8x18	50	Image Legend	45	53	16	2276,-	**OE-fit**	B,D
			8x18	92	Image Colt L.Gun	45	53	16	2296,-		B
			7,5x19	2	Nitro Sapphire FF	45	53	16	4572,-		B
			8x19	16	Advanti Inizio DST	45	53	16	4412,-		B
			8,5x19	5	Nitro Volcano G.Gun	45	53	16	4388,-		B,M
			8,5x19	6	Nitro Volcano	45	53	16	4632,-		B,M
			8,5x19	9	Nitro Sabre G.Blk	45	53	16	4292,-		B,M
			8,5x19	36	Image Colt	45	53	16	3028,-		B,M
			8,5x19	92	Image Colt L.Gun	45	53	16	2876,-		B,M
			8x20	2	Nitro Sapphire FF	45	53	16	5096,-		B
			8,5x20	5	Nitro Volcano G.Gun	45	53	16	4824,-		B,M
			8,5x20	6	Nitro Volcano	45	53	16	5164,-		B,M
			8,5x20	9	Nitro Sabre G.Blk	45	53	16	4800,-		B,M
			8,5x20	36	Image Colt	45	53	16	3432,-		B,M
			8,5x20	92	Image Colt L.Gun	45	53	16	3276,-		B,M
KIA			PCD: **5-114,3** Bolt - Mutter: **12x1,50** CB: **67,1**								
Ceed (CD) GT	11.18-	18-20	7,5x18	2	Nitro Sapphire FF	45	55	20	3944,-		B
			7,5x18	34	CSP 16	48	55	14	2444,-	**OE-fit**	B,D
			7,5x18	35	CSP 16 M.Gun	48	55	14	2444,-	**OE-fit**	B,D
			7,5x18	46	Image Stella	45	55	20	2276,-	**OE-fit**	B,D
			7,5x18	47	Image Stella M.Blk	45	55	20	2276,-	**OE-fit**	B,D
			8x18	9	Nitro Sabre G.Blk	45	55	20	3496,-		B
			8x18	11	Nitro Demon	48	55	14	2784,-		B
			8x18	16	Advanti Inizio DST	45	55	20	3828,-		B
			8x18	36	Image Colt	45	55	20	2412,-		B
			8x18	48	Image Motion	45	55	20	2204,-	**OE-fit**	B,D
			8x18	49	Image Motion G.Gun	45	55	20	2204,-	**OE-fit**	B,D
			8x18	50	Image Legend	45	55	20	2276,-	**OE-fit**	B,D
			7,5x19	2	Nitro Sapphire FF	45	55	20	4572,-		B
			8x19	16	Advanti Inizio DST	45	55	20	4412,-		B
			8,5x19	5	Nitro Volcano G.Gun	45	55	20	4388,-		B,M
			8,5x19	6	Nitro Volcano	45	55	20	4632,-		B,M
			8,5x19	9	Nitro Sabre G.Blk	45	55	20	4292,-		B,M
			8,5x19	36	Image Colt	45	55	20	3028,-		B,M
			8,5x19	92	Image Colt L.Gun	45	55	20	2876,-		B,M
			8x20	2	Nitro Sapphire FF	45	55	20	5096,-		B
			8,5x20	5	Nitro Volcano G.Gun	45	55	20	4824,-		B,M
			8,5x20	6	Nitro Volcano	45	55	20	5164,-		B,M
			8,5x20	9	Nitro Sabre G.Blk	45	55	20	4800,-		B,M
			8,5x20	36	Image Colt	45	55	20	3432,-		B,M
			8,5x20	92	Image Colt L.Gun	45	55	20	3276,-		B,M
KIA			PCD: **5-114,3** Bolt - Mutter: **12x1,50** CB: **67,1**								
Optima (JF)	11.15-	17-20	7x17	17	BM Drive M.Gun	50	53	5	1736,-		D
Hybrid 17"			7x17	34	CSP 16	50	53	5	1836,-	**OE-fit**	B,D
2.0 Turbo (180kW) 18"			7x17	35	CSP 16 M.Gun	50	53	5	1836,-	**OE-fit**	B,D
			7x17	40	Image Spirit	45	53	15	1476,-	**OE-fit**	B,D
			7x17	46	Image Stella	50	53	5	1812,-	**OE-fit**	B,D
			7x17	47	Image Stella M.Blk	50	53	5	1812,-	**OE-fit**	B,D
			7x17	48	Image Motion	45	53	15	1736,-	**OE-fit**	B,D
			7x17	49	Image Motion G.Gun	45	53	15	1736,-	**OE-fit**	B,D
			7,5x17	9	Nitro Sabre G.Blk	45	53	15	3052,-		B
			7,5x17	34	CSP 16	52	53	1	1836,-	**OE-fit**	B,D
			7,5x17	35	CSP 16 M.Gun	52	53	1	1836,-	**OE-fit**	B,D
			7,5x17	36	Image Colt	45	53	15	1956,-		B
			7,5x17	50	Image Legend	45	53	15	1812,-	**OE-fit**	B,D
			7,5x17	92	Image Colt L.Gun	45	53	15	1876,-		B
			7,5x18	2	Nitro Sapphire FF	45	53	15	3944,-		B
			7,5x18	34	CSP 16	48	53	9	2444,-	**OE-fit**	B,D
			7,5x18	35	CSP 16 M.Gun	48	53	9	2444,-	**OE-fit**	B,D
			7,5x18	46	Image Stella	45	53	15	2276,-	**OE-fit**	B,D
			7,5x18	47	Image Stella M.Blk	45	53	15	2276,-	**OE-fit**	B,D
			8x18	7	Nitro Spark G.Blk/Grey	45	53	15	3476,-		B
			8x18	8	Nitro Spark G.Blk/Red	45	53	15	3476,-		B
			8x18	9	Nitro Sabre G.Blk	45	53	15	3496,-		B
			8x18	11	Nitro Demon	48	53	9	2784,-		
			8x18	16	Advanti Inizio DST	45	53	15	3828,-		B
			8x18	36	Image Colt	45	53	15	2412,-		B
			8x18	48	Image Motion	45	53	15	2204,-	**OE-fit**	B,D
			8x18	49	Image Motion G.Gun	45	53	15	2204,-	**OE-fit**	B,D
			8x18	50	Image Legend	45	53	15	2276,-	**OE-fit**	B,D
			8x18	92	Image Colt L.Gun	45	53	15	2296,-		B
			7,5x19	2	Nitro Sapphire FF	45	53	15	4572,-		B
			8x19	16	Advanti Inizio DST	45	53	15	4412,-		B
			8,5x19	5	Nitro Volcano G.Gun	45	53	15	4388,-		B,M
			8,5x19	6	Nitro Volcano	45	53	15	4632,-		B
			8,5x19	9	Nitro Sabre G.Blk	45	53	15	4292,-		B
			8,5x19	36	Image Colt	45	53	15	3028,-		B
			8,5x19	92	Image Colt L.Gun	45	53	15	2876,-		B
			8,5x20	5	Nitro Volcano G.Gun	45	53	15	4824,-		B
			8,5x20	6	Nitro Volcano	45	53	15	5164,-		B
			8,5x20	7	Nitro Spark G.Blk/Grey	45	53	15	4660,-		B
			8,5x20	8	Nitro Spark G.Blk/Red	45	53	15	4660,-		B
			8,5x20	9	Nitro Sabre G.Blk	45	53	15	4800,-		B

Forts. neste side »

Bilmerke - Bilmodell	Årsmodell	Dimensjon	Felgdim.	Bilde	Felgmodell	ET Felg	ET Bil	Avvik ET	Veil. Pris eks. MVA	Merknader	B,C D, M
KIA (forts.)				PCD: **5-114,3** Bolt - Mutter: **12x1,50** CB: **67,1**							
			8,5x20	36	Image Colt	45	53	15	3432,-		B
			8,5x20	92	Image Colt L.Gun	45	53	15	3276,-		B
KIA				PCD: **5-114,3** Bolt - Mutter: **12x1,50** CB: **67,1**							
Stinger (CK)	11.17-	18-20	8x18	7	Nitro Spark G.Blk/Grey	35	34	-2	3476,-		B
Biler med Brembo bremser 19"			8x18	8	Nitro Spark G.Blk/Red	35	34	-2	3476,-		B
			8x18	9	Nitro Sabre G.Blk	35	34	-2	3496,-		B
			8,5x19	9	Nitro Sabre G.Blk	35	34	-2	4292,-		B
			8,5x20	7	Nitro Spark G.Blk/Grey	35	34	-2	4660,-		B
			8,5x20	8	Nitro Spark G.Blk/Red	35	34	-2	4660,-		B
			8,5x20	9	Nitro Sabre G.Blk	35	34	-2	4800,-		B
KIA				PCD: **5-114,3** Bolt - Mutter: **12x1,50** CB: **67,1**							
Carens (RP)	03.13-	16-20	6,5x16	34	CSP 16	48	46	-4	1468,-	**OE-fit**	B,D
Sorento (UM)	01.15-	17-22	6,5x16	36	Image Colt	45	46	2	1624,-		B
2.2CRDi Spirit, GT-line,			6,5x16	40	Image Spirit	45	46	2	1264,-	**OE-fit**	B,D
Platinum 18"			6,5x16	46	Image Stella	45	46	2	1548,-	**OE-fit**	B,D
Sorento (XM)	12.12-12.14	17-22	6,5x16	47	Image Stella M.Blk	45	46	2	1548,-	**OE-fit**	B,D
Facelift			6,5x16	48	Image Motion	45	46	2	1468,-	**OE-fit**	B,D
Sportage (JE)	10.04-07.10	16-20	6,5x16	49	Image Motion G.Gun	45	46	2	1468,-	**OE-fit**	B,D
			6,5x16	50	Image Legend	45	46	2	1544,-	**OE-fit**	B,D
			6,5x16	92	Image Colt L.Gun	45	46	2	1548,-		B
			7x16	17	BM Drive M.Gun	45	46	2	1476,-		D
			7x17	17	BM Drive M.Gun	50	46	-8	1736,-		D
			7x17	34	CSP 16	45	46	2	1836,-	**OE-fit**	B,D
			7x17	35	CSP 16 M.Gun	48	46	-4	1836,-	**OE-fit**	B,D
			7x17	40	Image Spirit	45	46	2	1476,-	**OE-fit**	B,D
			7x17	46	Image Stella	45	46	2	1812,-	**OE-fit**	B,D
			7x17	47	Image Stella M.Blk	45	46	2	1812,-	**OE-fit**	B,D
			7x17	48	Image Motion	45	46	2	1736,-	**OE-fit**	B,D
			7x17	49	Image Motion G.Gun	45	46	2	1736,-	**OE-fit**	B,D
			7,5x17	9	Nitro Sabre G.Blk	45	46	2	3052,-		B
			7,5x17	36	Image Colt	45	46	2	1956,-		B
			7,5x17	50	Image Legend	45	46	2	1812,-	**OE-fit**	B,D
			7,5x17	92	Image Colt L.Gun	45	46	2	1876,-		B
			7,5x18	2	Nitro Sapphire FF	45	46	2	3944,-		B
			7,5x18	34	CSP 16	49	46	-6	2444,-	**OE-fit**	B,D
			7,5x18	35	CSP 16 M.Gun	49	46	-6	2444,-		D
			7,5x18	46	Image Stella	45	46	2	2276,-	**OE-fit**	B,D
			7,5x18	47	Image Stella M.Blk	45	46	2	2276,-	**OE-fit**	B,D
			8x18	7	Nitro Spark G.Blk/Grey	45	46	2	3476,-		B
			8x18	8	Nitro Spark G.Blk/Red	45	46	2	3476,-		B
			8x18	9	Nitro Sabre G.Blk	45	46	2	3496,-		B
			8x18	11	Nitro Demon	48	46	-4	2784,-		
			8x18	16	Advanti Inizio DST	45	46	2	3828,-		B
			8x18	36	Image Colt	45	46	2	2412,-		B
			8x18	48	Image Motion	45	46	2	2204,-	**OE-fit**	B,D
			8x18	49	Image Motion G.Gun	45	46	2	2204,-	**OE-fit**	B,D
			8x18	50	Image Legend	45	46	2	2276,-	**OE-fit**	B,D
			8x18	92	Image Colt L.Gun	45	46	2	2296,-		B
			7,5x19	2	Nitro Sapphire FF	45	46	2	4572,-		B
			8x19	16	Advanti Inizio DST	45	46	2	4412,-		B
			8,5x19	5	Nitro Volcano G.Gun	45	46	2	4388,-		B
			8,5x19	6	Nitro Volcano	45	46	2	4632,-		B,M
			8,5x19	9	Nitro Sabre G.Blk	45	46	2	4292,-		B
			8,5x19	36	Image Colt	45	46	2	3028,-		B,M
			8,5x19	92	Image Colt L.Gun	45	46	2	2876,-		B,M
			8x20	2	Nitro Sapphire FF	45	46	2	5096,-		B
			8,5x20	5	Nitro Volcano G.Gun	45	46	2	4824,-		B,M
			8,5x20	6	Nitro Volcano	45	46	2	5164,-		B,M
			8,5x20	7	Nitro Spark G.Blk/Grey	45	46	2	4660,-		B,M
			8,5x20	8	Nitro Spark G.Blk/Red	45	46	2	4660,-		B,M
			8,5x20	9	Nitro Sabre G.Blk	45	46	2	4800,-		B,M
			8,5x20	36	Image Colt	45	46	2	3432,-		B,M
			8,5x20	92	Image Colt L.Gun	45	46	2	3276,-		B,M
			9x21	5	Nitro Volcano G.Gun	45	46	2	5540,-		B,M
			9x21	6	Nitro Volcano	45	46	2	5996,-		B,M
KIA				PCD: **5-114,3** Bolt - Mutter: **12x1,50** CB: **67,1**							
Sportage (QLE)	12.15-	16-20	6,5x16	34	CSP 16	42	49	13	1468,-	**OE-fit**	B,D
(Biler med elektrisk handbrems			6,5x16	36	Image Colt	45	49	7	1624,-		B
krever 17")			6,5x16	46	Image Stella	45	49	7	1548,-	**OE-fit**	B,D
			6,5x16	47	Image Stella M.Blk	45	49	7	1548,-	**OE-fit**	B,D
			6,5x16	48	Image Motion	45	49	7	1468,-	**OE-fit**	B,D
			6,5x16	49	Image Motion G.Gun	45	49	7	1468,-	**OE-fit**	B,D
			6,5x16	50	Image Legend	45	49	7	1544,-	**OE-fit**	B,D
			6,5x16	92	Image Colt L.Gun	45	49	7	1548,-		B
			7x16	17	BM Drive M.Gun	45	49	7	1476,-		D
			7x17	17	BM Drive M.Gun	50	49	-3	1736,-		D
			7x17	34	CSP 16	48	49	1	1836,-	**OE-fit**	B,D
			7x17	35	CSP 16 M.Gun	48	49	1	1836,-	**OE-fit**	B,D
			7x17	40	Image Spirit	45	49	7	1476,-	**OE-fit**	B,D
			7x17	46	Image Stella	45	49	7	1812,-	**OE-fit**	B,D
			7x17	47	Image Stella M.Blk	45	49	7	1812,-	**OE-fit**	B,D
			7x17	48	Image Motion	45	49	7	1736,-	**OE-fit**	B,D
			7x17	49	Image Motion G.Gun	45	49	7	1736,-	**OE-fit**	B,D
			7,5x17	9	Nitro Sabre G.Blk	45	49	7	3052,-		B
			7,5x17	36	Image Colt	45	49	7	1956,-		B

Forts. neste side »

Bilmerke - Bilmodell	Årsmodell	Dimensjon	Felgdim.	Bilde	Felgmodell	ET Felg	ET Bil	Avvik ET	Veil. Pris eks. MVA	Merknader	B,C D, M
KIA (forts.)			PCD: **5-114,3** Bolt - Mutter: **12x1,50** CB: **67,1**								
			7,5x17	50	Image Legend	45	49	7	1812,-	**OE-fit**	B,D
			7,5x17	92	Image Colt L.Gun	45	49	7	1876,-		B
			7,5x18	2	Nitro Sapphire FF	45	49	7	3944,-		B
			7,5x18	34	CSP 16	48	49	1	2444,-	**OE-fit**	B,D
			7,5x18	35	CSP 16 M.Gun	48	49	1	2444,-	**OE-fit**	B,D
			7,5x18	46	Image Stella	45	49	7	2276,-	**OE-fit**	B,D
			7,5x18	47	Image Stella M.Blk	45	49	7	2276,-	**OE-fit**	B,D
			8x18	7	Nitro Spark G.Blk/Grey	45	49	7	3476,-		B
			8x18	8	Nitro Spark G.Blk/Red	45	49	7	3476,-		B
			8x18	9	Nitro Sabre G.Blk	45	49	7	3496,-		B
			8x18	11	Nitro Demon	48	49	1	2784,-		
			8x18	16	Advanti Inizio DST	45	49	7	3828,-		B
			8x18	36	Image Colt	45	49	7	2412,-		B
			8x18	48	Image Motion	45	49	7	2204,-	**OE-fit**	B,D
			8x18	49	Image Motion G.Gun	45	49	7	2204,-	**OE-fit**	B,D
			8x18	50	Image Legend	45	49	7	2276,-	**OE-fit**	B,D
			8x18	92	Image Colt L.Gun	45	49	7	2296,-		B
			7,5x19	2	Nitro Sapphire FF	45	49	7	4572,-		B
			8x19	16	Advanti Inizio DST	45	49	7	4412,-		B
			8,5x19	5	Nitro Volcano G.Gun	45	49	7	4388,-		B,M
			8,5x19	6	Nitro Volcano	45	49	7	4632,-		B,M
			8,5x19	9	Nitro Sabre G.Blk	45	49	7	4292,-		B
			8,5x19	36	Image Colt	45	49	7	3028,-		B,M
			8,5x19	92	Image Colt L.Gun	45	49	7	2876,-		B,M
			8x20	2	Nitro Sapphire FF	45	49	7	5096,-		B
			8,5x20	1	Nitro Throne FF	40	49	17	5060,-		B,M
			8,5x20	5	Nitro Volcano G.Gun	45	49	7	4824,-		B,M
			8,5x20	6	Nitro Volcano	45	49	7	5164,-		B,M
			8,5x20	7	Nitro Spark G.Blk/Grey	45	49	7	4660,-		B
			8,5x20	8	Nitro Spark G.Blk/Red	45	49	7	4660,-		B
			8,5x20	9	Nitro Sabre G.Blk	45	49	7	4800,-		B
			8,5x20	36	Image Colt	45	49	7	3432,-		B,M
			8,5x20	92	Image Colt L.Gun	45	49	7	3276,-		B,M
KIA			PCD: **5-114,3** Bolt - Mutter: **12x1,50** CB: **67,1**								
Niro (DE)	06.16-	16-20	6,5x16	34	CSP 16	45	45	0	1468,-	**OE-fit**	B,D
			6,5x16	35	CSP 16 M.Gun	45	45	0	1468,-	**OE-fit**	B,D
			6,5x16	36	Image Colt	45	45	0	1624,-		B
			6,5x16	40	Image Spirit	45	45	0	1264,-	**OE-fit**	B,D
			6,5x16	46	Image Stella	45	45	0	1548,-	**OE-fit**	B,D
			6,5x16	47	Image Stella M.Blk	45	45	0	1548,-	**OE-fit**	B,D
			6,5x16	48	Image Motion	45	45	0	1468,-	**OE-fit**	B,D
			6,5x16	49	Image Motion G.Gun	45	45	0	1468,-	**OE-fit**	B,D
			6,5x16	50	Image Legend	45	45	0	1544,-	**OE-fit**	B,D
			6,5x16	92	Image Colt L.Gun	45	45	0	1548,-		B
			7x16	17	BM Drive M.Gun	45	45	0	1476,-		D
			7x17	34	CSP 16	45	45	0	1836,-		D
			7x17	40	Image Spirit	45	45	0	1476,-	**OE-fit**	B,D
			7x17	46	Image Stella	50	45	-10	1812,-	**OE-fit**	B,D
			7x17	47	Image Stella M.Blk	50	45	-10	1812,-	**OE-fit**	B,D
			7x17	48	Image Motion	45	45	0	1736,-	**OE-fit**	B,D
			7x17	49	Image Motion G.Gun	45	45	0	1736,-	**OE-fit**	B,D
			7,5x17	9	Nitro Sabre G.Blk	45	45	0	3052,-		B
			7,5x17	36	Image Colt	45	45	0	1956,-		B
			7,5x17	50	Image Legend	45	45	0	1812,-	**OE-fit**	B,D
			7,5x17	92	Image Colt L.Gun	45	45	0	1876,-		B
			7,5x18	2	Nitro Sapphire FF	45	45	0	3944,-		B
			7,5x18	46	Image Stella	45	45	0	2276,-	**OE-fit**	B,D
			7,5x18	47	Image Stella M.Blk	45	45	0	2276,-	**OE-fit**	B,D
			8x18	7	Nitro Spark G.Blk/Grey	45	45	0	3476,-		B
			8x18	8	Nitro Spark G.Blk/Red	45	45	0	3476,-		B
			8x18	9	Nitro Sabre G.Blk	45	45	0	3496,-		B
			8x18	16	Advanti Inizio DST	45	45	0	3828,-		B
			8x18	36	Image Colt	45	45	0	2412,-		B
			8x18	48	Image Motion	45	45	0	2204,-	**OE-fit**	B,D
			8x18	49	Image Motion G.Gun	45	45	0	2204,-	**OE-fit**	B,D
			8x18	50	Image Legend	45	45	0	2276,-	**OE-fit**	B,D
			8x18	92	Image Colt L.Gun	45	45	0	2296,-		B
			7,5x19	2	Nitro Sapphire FF	45	45	0	4572,-		B
			8x19	16	Advanti Inizio DST	45	45	0	4412,-		B
			8,5x19	9	Nitro Sabre G.Blk	45	45	0	4292,-		B
			8,5x19	36	Image Colt	45	45	0	3028,-		B
			8,5x19	92	Image Colt L.Gun	45	45	0	2876,-		B
			8x20	2	Nitro Sapphire FF	45	45	0	5096,-		B
			8,5x20	36	Image Colt	45	45	0	3432,-		B
			8,5x20	92	Image Colt L.Gun	45	45	0	3276,-		B,M
KIA			PCD: **5-114,3** Bolt - Mutter: **12x1,50** CB: **67,1**								
e-Niro (DE)	12.18-	17-19	7x17	17	BM Drive M.Gun	50	50	0	1736,-	**OE-fit**	B,D
e-Soul (SK3)	01.19-	17-19	7x17	34	CSP 16	50	50	0	1836,-	**OE-fit**	B,D
			7x17	35	CSP 16 M.Gun	50	50	0	1836,-	**OE-fit**	B,D
			7x17	40	Image Spirit	45	50	10	1476,-	**OE-fit**	B,D
			7x17	46	Image Stella	50	50	0	1812,-	**OE-fit**	B,D
			7x17	47	Image Stella M.Blk	50	50	0	1812,-	**OE-fit**	B,D
			7x17	48	Image Motion	45	50	10	1736,-	**OE-fit**	B,D
			7x17	49	Image Motion G.Gun	45	50	10	1736,-	**OE-fit**	B,D
			7,5x17	9	Nitro Sabre G.Blk	45	50	10	3052,-		B
			7,5x17	36	Image Colt	45	50	10	1956,-		B

Forts. neste side »

Bilmerke - Bilmodell	Årsmodell	Dimensjon	Felgdim.	Bilde	Felgmodell	ET Felg	ET Bil	Avvik ET	Veil. Pris eks. MVA	Merknader	B,C D, M
KIA (forts.)				PCD: **5-114,3**	Bolt - Mutter: **12x1,50**		CB: **67,1**				
			7,5x17	50	Image Legend	45	50	10	1812,-	**OE-fit**	B,D
			7,5x17	92	Image Colt L.Gun	45	50	10	1876,-		B
			7,5x18	2	Nitro Sapphire FF	45	50	10	3944,-		B
			7,5x18	34	CSP 16	48	50	4	2444,-	**OE-fit**	B,D
			7,5x18	35	CSP 16 M.Gun	48	50	4	2444,-	**OE-fit**	B,D
			7,5x18	46	Image Stella	45	50	10	2276,-	**OE-fit**	B,D
			7,5x18	47	Image Stella M.Blk	45	50	10	2276,-	**OE-fit**	B,D
			8x18	7	Nitro Spark G.Blk/Grey	45	50	10	3476,-		B
			8x18	8	Nitro Spark G.Blk/Red	45	50	10	3476,-		B
			8x18	9	Nitro Sabre G.Blk	45	50	10	3496,-		B
			8x18	11	Nitro Demon	48	50	4	2784,-		B
			8x18	16	Advanti Inizio DST	45	50	10	3828,-		B
			8x18	36	Image Colt	45	50	10	2412,-		B
			8x18	48	Image Motion	45	50	10	2204,-	**OE-fit**	B,D
			8x18	49	Image Motion G.Gun	45	50	10	2204,-	**OE-fit**	B,D
			8x18	50	Image Legend	45	50	10	2276,-	**OE-fit**	B,D
			8x18	92	Image Colt L.Gun	45	50	10	2296,-		B
			7,5x19	2	Nitro Sapphire FF	45	50	10	4572,-		B
			8x19	16	Advanti Inizio DST	45	50	10	4412,-		B
			8,5x19	5	Nitro Volcano G.Gun	45	50	10	4388,-		B,M
			8,5x19	6	Nitro Volcano	45	50	10	4632,-		B,M
			8,5x19	36	Image Colt	45	50	10	3028,-		B,M
			8,5x19	92	Image Colt L.Gun	45	50	10	2876,-		B,M
KIA				PCD: **5-114,3**	Bolt - Mutter: **12x1,50**		CB: **67,1**				
Sportage (SL)	02.14-11.15	16-20	6,5x16	36	Image Colt	35	36	2	1624,-		B
(Facelift)			6,5x16	92	Image Colt L.Gun	35	36	2	1548,-		B
			7,5x17	9	Nitro Sabre G.Blk	35	36	2	3052,-		B
			7,5x17	36	Image Colt	35	36	2	1956,-		B
			7,5x17	92	Image Colt L.Gun	35	36	2	1876,-		B
			7,5x18	2	Nitro Sapphire FF	35	36	2	3944,-		B
			8x18	7	Nitro Spark G.Blk/Grey	35	36	2	3476,-		B
			8x18	8	Nitro Spark G.Blk/Red	35	36	2	3476,-		B
			8x18	9	Nitro Sabre G.Blk	35	36	2	3496,-		B
			8x18	16	Advanti Inizio DST	35	36	2	3828,-		B
			8x18	36	Image Colt	35	36	2	2412,-		B
			8x18	92	Image Colt L.Gun	35	36	2	2296,-		B
			7,5x19	2	Nitro Sapphire FF	35	36	2	4572,-		B
			8x19	11	Nitro Demon	38	36	-4	3376,-		
			8x19	16	Advanti Inizio DST	35	36	2	4412,-		B
			8,5x19	5	Nitro Volcano G.Gun	35	36	2	4388,-		B
			8,5x19	6	Nitro Volcano	35	36	2	4632,-		B
			8,5x19	9	Nitro Sabre G.Blk	35	36	2	4292,-		B
			8,5x19	36	Image Colt	35	36	2	3028,-		B
			8,5x19	92	Image Colt L.Gun	35	36	2	2876,-		B
			8x20	2	Nitro Sapphire FF	35	36	2	5096,-		B
			8,5x20	1	Nitro Throne FF	40	36	-8	5060,-		B,M
			8,5x20	5	Nitro Volcano G.Gun	35	36	2	4824,-		B
			8,5x20	6	Nitro Volcano	35	36	2	5164,-		B
			8,5x20	7	Nitro Spark G.Blk/Grey	35	36	2	4660,-		B
			8,5x20	8	Nitro Spark G.Blk/Red	35	36	2	4660,-		B
			8,5x20	9	Nitro Sabre G.Blk	35	36	2	4800,-		B
			8,5x20	11	Nitro Demon	38	36	-4	3808,-		
			8,5x20	36	Image Colt	35	36	2	3432,-		B
			8,5x20	92	Image Colt L.Gun	35	36	2	3276,-		B
KIA				PCD: **5-114,3**	Bolt - Mutter: **12x1,50**		CB: **67,1**				
Opirus (LD)	10.07-12.10	17-20	6,5x16	36	Image Colt	35	41	12	1624,-		B
Optima (TF)	12.11-10.15	17-20	6,5x16	92	Image Colt L.Gun	35	41	12	1548,-		B
Sorento (XM)	10.09-11.12	17-22	7,5x17	9	Nitro Sabre G.Blk	35	41	12	3052,-		B
Sportage (SLS)	08.10-01.14	16-20	7,5x17	36	Image Colt	35	41	12	1956,-		B
			7,5x17	92	Image Colt L.Gun	35	41	12	1876,-		B
			7,5x18	2	Nitro Sapphire FF	35	41	12	3944,-		B
			8x18	7	Nitro Spark G.Blk/Grey	35	41	12	3476,-		B
			8x18	8	Nitro Spark G.Blk/Red	35	41	12	3476,-		B
			8x18	9	Nitro Sabre G.Blk	35	41	12	3496,-		B
			8x18	16	Advanti Inizio DST	35	41	12	3828,-		B
			8x18	36	Image Colt	35	41	12	2412,-		B
			8x18	92	Image Colt L.Gun	35	41	12	2296,-		B
			7,5x19	2	Nitro Sapphire FF	35	41	12	4572,-		B
			8x19	11	Nitro Demon	38	41	6	3376,-		
			8x19	16	Advanti Inizio DST	35	41	12	4412,-		B
			8,5x19	5	Nitro Volcano G.Gun	35	41	12	4388,-		B
			8,5x19	6	Nitro Volcano	35	41	12	4632,-		B
			8,5x19	9	Nitro Sabre G.Blk	35	41	12	4292,-		B
			8,5x19	36	Image Colt	35	41	12	3028,-		B
			8,5x19	92	Image Colt L.Gun	35	41	12	2876,-		B
			8x20	2	Nitro Sapphire FF	35	41	12	5096,-		B
			8,5x20	1	Nitro Throne FF	40	41	2	5060,-		B
			8,5x20	5	Nitro Volcano G.Gun	35	41	12	4824,-		B
			8,5x20	6	Nitro Volcano	35	41	12	5164,-		B
			8,5x20	7	Nitro Spark G.Blk/Grey	35	41	12	4660,-		B,M
			8,5x20	8	Nitro Spark G.Blk/Red	35	41	12	4660,-		B,M
			8,5x20	9	Nitro Sabre G.Blk	35	41	12	4800,-		B
			8,5x20	11	Nitro Demon	38	41	6	3808,-		
			8,5x20	36	Image Colt	35	41	12	3432,-		B
			8,5x20	92	Image Colt L.Gun	35	41	12	3276,-		B
			9x21	5	Nitro Volcano G.Gun	35	41	12	5540,-		B,M
			9x21	6	Nitro Volcano	35	41	12	5996,-		B,M

Bilmerke - Bilmodell	Årsmodell	Dimensjon	Felgdim.	Bilde	Felgmodell	ET Felg	ET Bil	Avvik ET	Veil. Pris eks. MVA	Merknader	B,C D, M
LADA			PCD: **4-100** Bolt - Mutter: **12x1,50B**		CB: **60,1**						
Vesta (GF)	09.15-	15-18	6x15	19	ATS Streetrallye Slv	38	50	24	1960,-		
			6x15	37	Image Comet	45	50	10	1316,-	**OE-fit**	B,D
			6x15	42	Image Brio	40	50	20	1304,-		B
			6x15	45	Image Ride	38	50	24	1552,-		
			6x16	37	Image Comet	40	50	20	1536,-	**OE-fit**	B,D
			6x16	38	Image Comet Slv	40	50	20	1536,-	**OE-fit**	B,D
			6,5x16	19	ATS Streetrallye Slv	40	50	20	2240,-		
			6,5x16	34	CSP 16	40	50	20	1468,-		D
			6,5x16	42	Image Brio	38	50	24	1524,-		B
			7x17	18	ATS Streetrallye Blk	45	50	10	3344,-		
			7x17	42	Image Brio	40	50	20	1832,-		B
			7,5x18	18	ATS Streetrallye Blk	38	50	24	4180,-		M
LANCIA			PCD: **4-98** Bolt - Mutter: **12x1,25B**		CB: **58,1**						
Musa (350)	09.04-	14-18	5,5x14	37	Image Comet	35	40	10	1264,-	**OE-fit**	B,D
			5,5x14	38	Image Comet Slv	35	40	10	1264,-	**OE-fit**	B,D
			6x15	19	ATS Streetrallye Slv	35	40	10	1960,-		D
			6x15	34	CSP 16	40	40	0	1228,-	**OE-fit**	B,D
			6x15	37	Image Comet	40	40	0	1316,-	**OE-fit**	B,D
			6x15	38	Image Comet Slv	40	40	0	1316,-	**OE-fit**	B,D
			6x15	45	Image Ride	38	40	4	1552,-	Eksenterbolter	
			6x16	37	Image Comet	40	40	0	1536,-	**OE-fit**	B,D
			6x16	38	Image Comet Slv	40	40	0	1536,-	**OE-fit**	B,D
			6,5x16	19	ATS Streetrallye Slv	35	40	10	2240,-		D
LANCIA			PCD: **4-98** Bolt - Mutter: **12x1,25B**		CB: **58,1**						
Ypsilon	07.11-12.16	15-17	6x15	19	ATS Streetrallye Slv	35	30	-10	1960,-		D
			6x15	45	Image Ride	38	30	-16	1552,-	Eksenterbolter	
			6,5x16	19	ATS Streetrallye Slv	35	30	-10	2240,-		D
LANCIA			PCD: **5-114,3** Bolt - Mutter: **12x1,50**		CB: **67,1**						
Flavia (JS)	09.11-	17-20	7,5x17	9	Nitro Sabre G.Blk	35	40	10	3052,-		
			7,5x17	36	Image Colt	35	40	10	1956,-		
			7,5x17	92	Image Colt L.Gun	35	40	10	1876,-		
			7,5x18	2	Nitro Sapphire FF	35	40	10	3944,-		
			8x18	7	Nitro Spark G.Blk/Grey	35	40	10	3476,-		
			8x18	8	Nitro Spark G.Blk/Red	35	40	10	3476,-		
			8x18	9	Nitro Sabre G.Blk	35	40	10	3496,-		
			8x18	16	Advanti Inizio DST	35	40	10	3828,-		
			8x18	36	Image Colt	35	40	10	2412,-		
			8x18	92	Image Colt L.Gun	35	40	10	2296,-		
			7,5x19	2	Nitro Sapphire FF	35	40	10	4572,-		
			8x19	11	Nitro Demon	38	40	4	3376,-		
			8x19	16	Advanti Inizio DST	35	40	10	4412,-		
			8,5x19	5	Nitro Volcano G.Gun	35	40	10	4388,-		
			8,5x19	6	Nitro Volcano	35	40	10	4632,-		
			8,5x19	9	Nitro Sabre G.Blk	35	40	10	4292,-		
			8,5x19	36	Image Colt	35	40	10	3028,-		M
			8,5x19	92	Image Colt L.Gun	35	40	10	2876,-		M
			8x20	2	Nitro Sapphire FF	35	40	10	5096,-		
			8,5x20	1	Nitro Throne FF	40	40	0	5060,-		M
			8,5x20	5	Nitro Volcano G.Gun	35	40	10	4824,-		
			8,5x20	6	Nitro Volcano	35	40	10	5164,-		
			8,5x20	7	Nitro Spark G.Blk/Grey	35	40	10	4660,-		
			8,5x20	8	Nitro Spark G.Blk/Red	35	40	10	4660,-		
			8,5x20	9	Nitro Sabre G.Blk	35	40	10	4800,-		
			8,5x20	11	Nitro Demon	38	40	4	3808,-		
			8,5x20	36	Image Colt	35	40	10	3432,-		M
			8,5x20	92	Image Colt L.Gun	35	40	10	3276,-		M
LANCIA			PCD: **5-127** Bolt - Mutter: **12x1,50**		CB: **71,5**						
Voyager (RT)	09.11-	17-22	8x18	68	BM Macho	40	40	0	3300,-		D
			8x18	69	BM Macho M.Blk	40	40	0	3300,-		D
			9x20	12	Nitro Edge M.Blk	40	40	0	4220,-		D,M
			9x22	12	Nitro Edge M.Blk	40	40	0	4888,-		D,M
LAND ROVER			PCD: **5-114,3** Bolt - Mutter: **12x1,50**		CB: **64,1**						
Freelander (LN)	03.98-11.06	15-20	6,5x16	36	Image Colt	45	46	2	1624,-		
			6,5x16	92	Image Colt L.Gun	45	46	2	1548,-		
			7,5x17	9	Nitro Sabre G.Blk	45	46	2	3052,-		
			7,5x17	36	Image Colt	45	46	2	1956,-		
			7,5x17	92	Image Colt L.Gun	45	46	2	1876,-		
			7,5x18	2	Nitro Sapphire FF	45	46	2	3944,-		
			8x18	7	Nitro Spark G.Blk/Grey	45	46	2	3476,-		
			8x18	8	Nitro Spark G.Blk/Red	45	46	2	3476,-		
			8x18	9	Nitro Sabre G.Blk	45	46	2	3496,-		
			7,5x19	2	Nitro Sapphire FF	45	46	2	4572,-		
			8x20	2	Nitro Sapphire FF	45	46	2	5096,-		
			8,5x20	7	Nitro Spark G.Blk/Grey	45	46	2	4660,-		
			8,5x20	8	Nitro Spark G.Blk/Red	45	46	2	4660,-		
LAND ROVER			PCD: **5-108** Bolt - Mutter: **14x1,50**		CB: **63,4**						
Discovery (LC) sport	02.15-	17-22	7x17	46	Image Stella	40	45	10	1812,-		D
Evoque (LV)	04.11-01.19	17-22	7x17	47	Image Stella M.Blk	40	45	10	1812,-		D
Evoque (LZ)	02.19-	17-22	7x17	48	Image Motion	40	45	10	1736,-		D
D240, P250, P300 18"			7x17	49	Image Motion G.Gun	40	45	10	1736,-		D
Velar (LY)	06.17-	18-22	7,5x17	36	Image Colt	40	45	10	1956,-		
			7,5x17	46	Image Stella	42	45	6	1812,-		D
			7,5x17	47	Image Stella M.Blk	42	45	6	1812,-		D
			7,5x17	50	Image Legend	45	45	0	1812,-		D
			7,5x17	92	Image Colt L.Gun	40	45	10	1876,-		

Forts. neste side »

Bilmerke - Bilmodell	Årsmodell	Dimensjon	Felgdim.	Bilde	Felgmodell	ET Felg	ET Bil	Avvik ET	Veil. Pris eks. MVA	Merknader	B,C D, M
LAND ROVER (forts.)				PCD: **5-108** Bolt - Mutter: **14x1,50** CB: **63,4**							
			8x17	9	Nitro Sabre G.Blk	42	45	6	3108,-		D
			8x17	17	BM Drive M.Gun	42	45	6	1736,-		D
			8x17	22	ATS Evolution	42	45	6	2268,-		D
			8x17	23	ATS Evolution G.Grey	42	45	6	2340,-		D
			8x17	40	Image Spirit	42	45	6	1476,-	**OE-fit**	B,D
			8x17	48	Image Motion	42	45	6	1736,-		D
			8x17	49	Image Motion G.Gun	42	45	6	1736,-		D
			8x18	2	Nitro Sapphire FF	42	45	6	4036,-		D
			8x18	7	Nitro Spark G.Blk/Grey	42	45	6	3476,-		D
			8x18	8	Nitro Spark G.Blk/Red	45	45	0	3476,-		
			8x18	9	Nitro Sabre G.Blk	42	45	6	3496,-		D
			8x18	10	Nitro Demon H.Slv	40	45	10	2972,-		D
			8x18	11	Nitro Demon	40	45	10	2784,-		D
			8x18	16	Advanti Inizio DST	42	45	6	3828,-		D
			8x18	17	BM Drive M.Gun	42	45	6	2296,-		D
			8x18	22	ATS Evolution	42	45	6	3016,-		D
			8x18	23	ATS Evolution G.Grey	42	45	6	3116,-		D
			8x18	36	Image Colt	42	45	6	2412,-		
			8x18	40	Image Spirit	42	45	6	1912,-		D
			8x18	41	Image Thor	42	45	6	2412,-		D
			8x18	46	Image Stella	42	45	6	2276,-		D
			8x18	47	Image Stella M.Blk	42	45	6	2276,-		D
			8x18	48	Image Motion	42	45	6	2204,-		D
			8x18	49	Image Motion G.Gun	42	45	6	2204,-		D
			8x18	50	Image Legend	42	45	6	2276,-		D
			8x18	92	Image Colt L.Gun	42	45	6	2296,-		
			8x19	2	Nitro Sapphire FF	42	45	6	4684,-		D
			8x19	3	Nitro Turismo FF	42	45	6	4492,-		D
			8x19	4	Nitro Turismo FF G.Gun/Pol	42	45	6	4644,-		D
			8x19	10	Nitro Demon H.Slv	40	45	10	3624,-		D
			8x19	11	Nitro Demon	40	45	10	3376,-		D
			8x19	16	Advanti Inizio DST	42	45	6	4412,-		D
			8x19	22	ATS Evolution	42	45	6	3892,-		D
			8x19	23	ATS Evolution G.Grey	42	45	6	4008,-		D
			8x19	48	Image Motion	42	45	6	2532,-		D
			8x19	49	Image Motion G.Gun	42	45	6	2532,-		D
			8,5x19	3	Nitro Turismo FF	45	45	0	4492,-		D
			8,5x19	4	Nitro Turismo FF G.Gun/Pol	45	45	0	4644,-		D
			8,5x19	5	Nitro Volcano G.Gun	40	45	10	4388,-		D
			8,5x19	6	Nitro Volcano	40	45	10	4632,-		D
			8,5x19	9	Nitro Sabre G.Blk	40	45	10	4292,-		D
			8,5x19	36	Image Colt	42	45	6	3028,-		
			8,5x19	41	Image Thor	40	45	10	3048,-		
			8,5x19	92	Image Colt L.Gun	42	45	6	2876,-		
			9x19	12	Nitro Edge M.Blk	38	45	14	3884,-		D,M
			8x20	2	Nitro Sapphire FF	45	45	0	5096,-		D
			8,5x20	1	Nitro Throne FF	40	45	10	5060,-		D
			8,5x20	3	Nitro Turismo FF	45	45	0	4812,-		D
			8,5x20	4	Nitro Turismo FF G.Gun/Pol	45	45	0	4964,-		D
			8,5x20	5	Nitro Volcano G.Gun	45	45	0	4824,-		D
			8,5x20	6	Nitro Volcano	45	45	0	5164,-		D
			8,5x20	7	Nitro Spark G.Blk/Grey	42	45	6	4660,-		D
			8,5x20	8	Nitro Spark G.Blk/Red	45	45	0	4660,-		
			8,5x20	9	Nitro Sabre G.Blk	40	45	10	4800,-		D
			8,5x20	10	Nitro Demon H.Slv	38	45	14	4104,-		D
			8,5x20	11	Nitro Demon	38	45	14	3808,-		D
			8,5x20	36	Image Colt	42	45	6	3432,-		
			8,5x20	92	Image Colt L.Gun	42	45	6	3276,-		
			9x20	1	Nitro Throne FF	40	45	10	5060,-		D
			9x20	5	Nitro Volcano G.Gun	40	45	10	4824,-		D,M
			9x20	6	Nitro Volcano	40	45	10	5164,-		D,M
			9x20	12	Nitro Edge M.Blk	38	45	14	4220,-		D,M
			9x20	15	Nitro Magnum	38	45	14	4572,-		D,M
			9,5x20	5	Nitro Volcano G.Gun	40	45	10	4824,-		D,M
			9,5x20	6	Nitro Volcano	40	45	10	5164,-		D,M
			9x21	5	Nitro Volcano G.Gun	40	45	10	5540,-		D,M
			9x21	6	Nitro Volcano	40	45	10	5996,-		D,M
			9,5x21	5	Nitro Volcano G.Gun	40	45	10	5540,-		D,M
			9,5x21	6	Nitro Volcano	40	45	10	5996,-		D,M
			9x22	12	Nitro Edge M.Blk	38	45	14	4888,-		D,M
			9x22	15	Nitro Magnum	38	45	14	5420,-		D,M
			9,5x22	1	Nitro Throne FF	42	45	6	6276,-		D,M
			10,5x22	15	Nitro Magnum	40	45	10	5420,-	Kun bak	D,M
LAND ROVER				PCD: **5-108** Bolt - Mutter: **14x1,50** CB: **63,4**							
Freelander (LF)	12.06-01.15	16-20	6,5x16	36	Image Colt	45	50	10	1624,-		D
2.2D (140kW) & 3.2 17"			6,5x16	92	Image Colt L.Gun	45	50	10	1548,-		D
			7x16	17	BM Drive M.Gun	50	50	0	1476,-		D
			7x16	40	Image Spirit	45	50	10	1264,-		D
			7x16	46	Image Stella	40	50	20	1548,-		
			7x16	47	Image Stella M.Blk	40	50	20	1548,-		
			7,5x17	9	Nitro Sabre G.Blk	45	50	10	3052,-		D
			7,5x17	36	Image Colt	47	50	6	1956,-		D
			7,5x17	46	Image Stella	42	50	16	1812,-		D
			7,5x17	47	Image Stella M.Blk	42	50	16	1812,-		D
			7,5x17	50	Image Legend	45	50	10	1812,-		D
			7,5x17	92	Image Colt L.Gun	47	50	6	1876,-		D

Forts. neste side »

Bilmerke - Bilmodell	Årsmodell	Dimensjon	Felgdim.	Bilde	Felgmodell	ET Felg	ET Bil	Avvik ET	Veil. Pris eks. MVA	Merknader	B,C D, M
LAND ROVER (forts.)			PCD: **5-108** Bolt - Mutter: **14x1,50** CB: **63,4**								
			8x17	17	BM Drive M.Gun	48	50	4	1736,-		D
			8x17	48	Image Motion	50	50	0	1736,-		D
			8x17	49	Image Motion G.Gun	50	50	0	1736,-		D
			7,5x18	2	Nitro Sapphire FF	50	50	0	3944,-		D
			7,5x18	46	Image Stella	50	50	0	2276,-		D
			7,5x18	47	Image Stella M.Blk	50	50	0	2276,-		D
			8x18	7	Nitro Spark G.Blk/Grey	47	50	6	3476,-		D
			8x18	8	Nitro Spark G.Blk/Red	45	50	10	3476,-		
			8x18	9	Nitro Sabre G.Blk	47	50	6	3496,-		D
			8x18	10	Nitro Demon H.Slv	48	50	4	2972,-		D
			8x18	11	Nitro Demon	48	50	4	2784,-		D
			8x18	17	BM Drive M.Gun	48	50	4	2296,-		D
			8x18	36	Image Colt	47	50	6	2412,-		D
			8x18	41	Image Thor	42	50	16	2412,-		D
			8x18	48	Image Motion	50	50	0	2204,-		D
			8x18	49	Image Motion G.Gun	50	50	0	2204,-		D
			8x18	50	Image Legend	50	50	0	2276,-		D
			8x18	92	Image Colt L.Gun	47	50	6	2296,-		D
			7,5x19	2	Nitro Sapphire FF	50	50	0	4572,-		D
			8x19	3	Nitro Turismo FF	50	50	0	4492,-		D
			8x19	4	Nitro Turismo FF G.Gun/Pol	50	50	0	4644,-		D
			8x19	10	Nitro Demon H.Slv	48	50	4	3624,-		D
			8x19	11	Nitro Demon	48	50	4	3376,-		D
			8x19	48	Image Motion	50	50	0	2532,-		D
			8x19	49	Image Motion G.Gun	50	50	0	2532,-		D
			8,5x19	5	Nitro Volcano G.Gun	45	50	10	4388,-		D
			8,5x19	6	Nitro Volcano	45	50	10	4632,-		D
			8,5x19	36	Image Colt	47	50	6	3028,-		D
			8,5x19	41	Image Thor	47	50	6	3048,-		D
			8,5x19	92	Image Colt L.Gun	47	50	6	2876,-		D
			8x20	2	Nitro Sapphire FF	50	50	0	5096,-		D
			8x20	3	Nitro Turismo FF	45	50	10	4812,-		D
			8x20	4	Nitro Turismo FF G.Gun/Pol	45	50	10	4964,-		D
			8,5x20	2	Nitro Sapphire FF	47	50	6	5216,-		D
			8,5x20	5	Nitro Volcano G.Gun	45	50	10	4824,-		D,M
			8,5x20	6	Nitro Volcano	45	50	10	5164,-		D,M
			8,5x20	7	Nitro Spark G.Blk/Grey	47	50	6	4660,-		D,M
			8,5x20	8	Nitro Spark G.Blk/Red	45	50	10	4660,-		M
			8,5x20	10	Nitro Demon H.Slv	45	50	10	4104,-		D,M
			8,5x20	11	Nitro Demon	45	50	10	3808,-		D,M
			8,5x20	36	Image Colt	47	50	6	3432,-		D
			8,5x20	92	Image Colt L.Gun	47	50	6	3276,-		D
LAND ROVER			PCD: **5-120** Bolt - Mutter: **14x1,50** CB: **70,1**								
Discovery II	98-05	16-22	9x20	15	Nitro Magnum	40	57	34	4572,-		
Range Rover II	12.94-02.02	16-22	9x22	15	Nitro Magnum	40	57	34	5420,-		
LAND ROVER			PCD: **5-120** Bolt - Mutter: **14x1,50** CB: **72,5**								
Discovery III	01.05-09.09	17-22	9x19	11	Nitro Demon	45	57	24	3376,-		D
TdV6 3.0 18"			9x19	12	Nitro Edge M.Blk	40	57	34	3884,-		
V8 18"			9x20	12	Nitro Edge M.Blk	40	57	34	4220,-		
Discovery IV	10.09-04.17	18-22	9x20	15	Nitro Magnum	40	57	34	4572,-		
TdV6 3.0 19"			9,5x20	11	Nitro Demon	45	57	24	3808,-		D
			10x20	12	Nitro Edge M.Blk	40	57	34	4220,-		M
			9x22	12	Nitro Edge M.Blk	40	57	34	4888,-		
			9x22	15	Nitro Magnum	40	57	34	5420,-		
			10x22	12	Nitro Edge M.Blk	40	57	34	4888,-		M
LAND ROVER			PCD: **5-120** Bolt - Mutter: **14x1,50** CB: **72,5**								
Discovery (LR) V	05.17-	19-22	9x19	10	Nitro Demon H.Slv	40	49	18	3624,-		
			9x19	12	Nitro Edge M.Blk	40	49	18	3884,-		
			9x19	26	CSP 18 G.Blk/pol	40	49	18	3596,-		D
			9x19	27	CSP 18	40	49	18	3444,-		D
			9x19	28	CSP 18 G.Blk	40	49	18	3444,-		D
			9x20	12	Nitro Edge M.Blk	40	49	18	4220,-		
			9x20	15	Nitro Magnum	40	49	18	4572,-		
			9,5x20	10	Nitro Demon H.Slv	40	49	18	4104,-		
			9,5x20	11	Nitro Demon	45	49	8	3808,-		D
			10x20	12	Nitro Edge M.Blk	40	49	18	4220,-		
			9x22	12	Nitro Edge M.Blk	40	49	18	4888,-		
			9x22	15	Nitro Magnum	40	49	18	5420,-		
			10x22	12	Nitro Edge M.Blk	40	49	18	4888,-		
			10,5x22	15	Nitro Magnum	42	49	14	5420,-		M
LAND ROVER			PCD: **5-120** Bolt - Mutter: **14x1,50** CB: **72,5**								
Range Rover (LS) Sport	03.05-09.09	17-22	9x19	11	Nitro Demon	45	57	24	3376,-		D
V8 18"			9x19	12	Nitro Edge M.Blk	40	57	34	3884,-		
TdV8, V8 S/C 19"			9x20	12	Nitro Edge M.Blk	40	57	34	4220,-		
Range Rover (LS) Sport facelift	10.09-06.13	19-22	9x20	15	Nitro Magnum	40	57	34	4572,-		
V8 S/C 20"			9,5x20	11	Nitro Demon	45	57	24	3808,-		D
			10x20	12	Nitro Edge M.Blk	40	57	34	4220,-		M
			9x22	12	Nitro Edge M.Blk	40	57	34	4888,-		
			9x22	15	Nitro Magnum	40	57	34	5420,-		
			10x22	12	Nitro Edge M.Blk	40	57	34	4888,-		M

Bilmerke - Bilmodell	Årsmodell	Dimensjon	Felgdim.	Bilde	Felgmodell	ET Felg	ET Bil	Avvik ET	Veil. Pris eks. MVA	Merknader	B,C D, M
LAND ROVER				PCD: **5-120** Bolt - Mutter: **14x1,50** CB: **72,5**							
Range Rover (LM)	03.02-09.09	18-22	9x19	11	Nitro Demon	45	57	24	3376,-		D
TdV8 19"			9x19	12	Nitro Edge M.Blk	40	57	34	3884,-		
V8 S/C 19"			9x19	26	CSP 18 G.Blk/pol	40	57	34	3596,-		D
Range Rover (LM) facelift	10.09-10.12	19-22	9x19	27	CSP 18	40	57	34	3444,-		D
V8 S/C 20"			9x19	28	CSP 18 G.Blk	40	57	34	3444,-		D
			9x20	12	Nitro Edge M.Blk	40	57	34	4220,-		
			9x20	15	Nitro Magnum	40	57	34	4572,-		
			9,5x20	11	Nitro Demon	45	57	24	3808,-		D
			10x20	12	Nitro Edge M.Blk	40	57	34	4220,-		M
			9x22	12	Nitro Edge M.Blk	40	57	34	4888,-		
			9x22	15	Nitro Magnum	40	57	34	5420,-		
			10x22	12	Nitro Edge M.Blk	40	57	34	4888,-		M
LAND ROVER				PCD: **5-120** Bolt - Mutter: **14x1,50** CB: **72,5**							
Range Rover (LG) IV	11.12-	19-22	9x19	11	Nitro Demon	45	47	4	3376,-		D
SDV6 (215kW) 20"			9x19	12	Nitro Edge M.Blk	40	47	14	3884,-		
SDV8, V8 S/C 20"			9x19	26	CSP 18 G.Blk/pol	40	47	14	3596,-		D
Range Rover (LW) Sport	07.13-	19-22	9x19	27	CSP 18	40	47	14	3444,-		D
SDV6 (215kW) 20"			9x19	28	CSP 18 G.Blk	40	47	14	3444,-		D
SDV8, V8 S/C 20"			9x20	12	Nitro Edge M.Blk	40	47	14	4220,-		
			9x20	15	Nitro Magnum	40	47	14	4572,-		
			9,5x20	11	Nitro Demon	45	47	4	3808,-		D
			10x20	12	Nitro Edge M.Blk	40	47	14	4220,-		
			9x22	12	Nitro Edge M.Blk	40	47	14	4888,-		
			9x22	15	Nitro Magnum	40	47	14	5420,-		
			10x22	12	Nitro Edge M.Blk	40	47	14	4888,-		
			10,5x22	15	Nitro Magnum	42	47	10	5420,-		M
LEXUS				PCD: **5-100** Bolt - Mutter: **12x1,50** CB: **54,1**							
CT (A10)	01.11-	16-20	6,5x16	34	CSP 16	39	45	12	1468,-	**OE-fit**, Lexus OE-mutter	B,D
			6,5x16	35	CSP 16 M.Gun	39	45	12	1468,-	**OE-fit**, Lexus OE-mutter	B,D
			6,5x16	36	Image Colt	40	45	10	1624,-		
			6,5x16	92	Image Colt L.Gun	40	45	10	1548,-		
			7,5x17	16	Advanti Inizio DST	42	45	6	3324,-		
			7,5x17	36	Image Colt	43	45	4	1956,-		
			7,5x17	92	Image Colt L.Gun	43	45	4	1876,-		
			8x18	16	Advanti Inizio DST	42	45	6	3828,-		
LEXUS				PCD: **5-114,3** Bolt - Mutter: **12x1,50** CB: **60,1**							
GS (S1)	10.91-08.98	16-20	6,5x16	34	CSP 16	45	50	10	1468,-	**OE-fit**, Lexus OE-mutter	B,D
GS (S16)	09.98-06.05	16-20	6,5x16	35	CSP 16 M.Gun	45	50	10	1468,-	**OE-fit**, Lexus OE-mutter	B,D
IS (XE1)	10.98-12.05	16-20	6,5x16	36	Image Colt	35	50	30	1624,-		
IS (XE2)	01.06-04.13	16-20	6,5x16	46	Image Stella	39	50	22	1548,-	**OE-fit**	B,D
IS (XE2) cab	07.09-	17-20	6,5x16	47	Image Stella M.Blk	39	50	22	1548,-	**OE-fit**	B,D
			6,5x16	48	Image Motion	39	50	22	1468,-	**OE-fit**, Lexus OE-mutter	B,D
			6,5x16	49	Image Motion G.Gun	39	50	22	1468,-	**OE-fit**	B,D
			6,5x16	50	Image Legend	39	50	22	1544,-	**OE-fit**	B,D
			6,5x16	92	Image Colt L.Gun	35	50	30	1548,-		
			7x16	17	BM Drive M.Gun	39	50	22	1476,-	**OE-fit**, Lexus OE-mutter	B,D
			7x16	34	CSP 16	40	50	20	1468,-	**OE-fit**	B,D
			7x16	35	CSP 16 M.Gun	40	50	20	1468,-	**OE-fit**	B,D
			7x16	40	Image Spirit	40	50	20	1264,-	**OE-fit**	B,D
			7x17	17	BM Drive M.Gun	40	50	20	1736,-	**OE-fit**, Lexus OE-mutter	B,D
			7x17	34	CSP 16	45	50	10	1836,-	**OE-fit**, Lexus OE-mutter	B,D
			7x17	35	CSP 16 M.Gun	45	50	10	1836,-	**OE-fit**, Lexus OE-mutter	B,D
			7x17	40	Image Spirit	45	50	10	1476,-	**OE-fit**	B,D
			7x17	46	Image Stella	45	50	10	1812,-	**OE-fit**	B,D
			7x17	47	Image Stella M.Blk	45	50	10	1812,-	**OE-fit**	B,D
			7x17	48	Image Motion	45	50	10	1736,-	**OE-fit**, Lexus OE-mutter	B,D
			7x17	49	Image Motion G.Gun	45	50	10	1736,-	**OE-fit**	B,D
			7,5x17	9	Nitro Sabre G.Blk	45	50	10	3052,-		
			7,5x17	36	Image Colt	45	50	10	1956,-		
			7,5x17	50	Image Legend	45	50	10	1812,-	**OE-fit**	B,D
			7,5x17	92	Image Colt L.Gun	45	50	10	1876,-		
			7,5x18	2	Nitro Sapphire FF	45	50	10	3944,-		
			7,5x18	34	CSP 16	45	50	10	2444,-	**OE-fit**, Lexus OE-mutter	B,D
			7,5x18	35	CSP 16 M.Gun	45	50	10	2444,-	**OE-fit**, Lexus OE-mutter	B,D
			7,5x18	46	Image Stella	45	50	10	2276,-	**OE-fit**	B,D
			7,5x18	47	Image Stella M.Blk	45	50	10	2276,-	**OE-fit**	B,D
			8x18	7	Nitro Spark G.Blk/Grey	45	50	10	3476,-		
			8x18	8	Nitro Spark G.Blk/Red	45	50	10	3476,-		
			8x18	9	Nitro Sabre G.Blk	45	50	10	3496,-		
			8x18	11	Nitro Demon	48	50	4	2784,-		
			8x18	16	Advanti Inizio DST	45	50	10	3828,-		
			8x18	36	Image Colt	45	50	10	2412,-		
			8x18	48	Image Motion	45	50	10	2204,-		
			8x18	49	Image Motion G.Gun	45	50	10	2204,-		
			8x18	50	Image Legend	45	50	10	2276,-	**OE-fit**	B,D
			8x18	92	Image Colt L.Gun	45	50	10	2296,-		
			7,5x19	2	Nitro Sapphire FF	45	50	10	4572,-		
			8x19	16	Advanti Inizio DST	45	50	10	4412,-		
			8,5x19	5	Nitro Volcano G.Gun	45	50	10	4388,-		
			8,5x19	6	Nitro Volcano	45	50	10	4632,-		
			8,5x19	9	Nitro Sabre G.Blk	45	50	10	4292,-		
			8,5x19	36	Image Colt	45	50	10	3028,-		
			8,5x19	92	Image Colt L.Gun	45	50	10	2876,-		
			9x19	11	Nitro Demon	45	50	10	3376,-	Kun bak	
			8x20	2	Nitro Sapphire FF	45	50	10	5096,-		

Forts. neste side »

Bilmerke - Bilmodell	Årsmodell	Dimensjon	Felgdim.	Bilde	Felgmodell	ET Felg	ET Bil	Avvik ET	Veil. Pris eks. MVA	Merknader	B,C D, M
LEXUS (forts.)			PCD: **5-114,3** Bolt - Mutter: **12x1,50** CB: **60,1**								
			8,5x20	5	Nitro Volcano G.Gun	45	50	10	4824,-		
			8,5x20	6	Nitro Volcano	45	50	10	5164,-		
			8,5x20	7	Nitro Spark G.Blk/Grey	45	50	10	4660,-		
			8,5x20	8	Nitro Spark G.Blk/Red	45	50	10	4660,-		
			8,5x20	9	Nitro Sabre G.Blk	45	50	10	4800,-		
			8,5x20	36	Image Colt	45	50	10	3432,-		
			8,5x20	92	Image Colt L.Gun	45	50	10	3276,-		
LEXUS			PCD: **5-114,3** Bolt - Mutter: **12x1,50** CB: **60,1**								
IS (XE2) F	02.08-01.13	18-20	9x19	11	Nitro Demon	45	45	0	3376,-	Kun bak	
LEXUS			PCD: **5-114,3** Bolt - Mutter: **12x1,50** CB: **60,1**								
IS (XE3)	05.13-	16-20	7,5x17	9	Nitro Sabre G.Blk	45	45	0	3052,-		
			7,5x17	36	Image Colt	45	45	0	1956,-		
			7,5x17	92	Image Colt L.Gun	45	45	0	1876,-		
			7,5x18	2	Nitro Sapphire FF	45	45	0	3944,-		
			7,5x18	34	CSP 16	45	45	0	2444,-	**OE-fit**, Lexus OE-mutter	B,D
			7,5x18	35	CSP 16 M.Gun	45	45	0	2444,-	**OE-fit**, Lexus OE-mutter	B,D
			7,5x18	46	Image Stella	45	45	0	2276,-	**OE-fit**	B,D
			7,5x18	47	Image Stella M.Blk	45	45	0	2276,-	**OE-fit**	B,D
			8x18	7	Nitro Spark G.Blk/Grey	45	45	0	3476,-		
			8x18	8	Nitro Spark G.Blk/Red	45	45	0	3476,-		
			8x18	9	Nitro Sabre G.Blk	45	45	0	3496,-		
			8x18	16	Advanti Inizio DST	45	45	0	3828,-		
			8x18	36	Image Colt	45	45	0	2412,-		
			8x18	48	Image Motion	45	45	0	2204,-		
			8x18	49	Image Motion G.Gun	45	45	0	2204,-		
			8x18	92	Image Colt L.Gun	45	45	0	2296,-		
			7,5x19	2	Nitro Sapphire FF	45	45	0	4572,-		
			8x19	16	Advanti Inizio DST	45	45	0	4412,-		
			8,5x19	5	Nitro Volcano G.Gun	45	45	0	4388,-		
			8,5x19	6	Nitro Volcano	45	45	0	4632,-		
			8,5x19	9	Nitro Sabre G.Blk	45	45	0	4292,-		
			8,5x19	36	Image Colt	45	45	0	3028,-		
			8,5x19	92	Image Colt L.Gun	45	45	0	2876,-		
			8x20	2	Nitro Sapphire FF	45	45	0	5096,-		
			8,5x20	1	Nitro Throne FF	40	45	10	5060,-		
			8,5x20	5	Nitro Volcano G.Gun	45	45	0	4824,-		
			8,5x20	6	Nitro Volcano	45	45	0	5164,-		
			8,5x20	7	Nitro Spark G.Blk/Grey	45	45	0	4660,-		
			8,5x20	8	Nitro Spark G.Blk/Red	45	45	0	4660,-		
			8,5x20	9	Nitro Sabre G.Blk	45	45	0	4800,-		
			8,5x20	36	Image Colt	45	45	0	3432,-		
			8,5x20	92	Image Colt L.Gun	45	45	0	3276,-		
LEXUS			PCD: **5-114,3** Bolt - Mutter: **12x1,50** CB: **60,1**								
ES (XZ1L)	08.18-	17-21	7,5x17	9	Nitro Sabre G.Blk	35	41	12	3052,-		
			7,5x17	34	CSP 16	40	41	2	1836,-	**OE-fit**	B,D
			7,5x17	35	CSP 16 M.Gun	40	41	2	1836,-	**OE-fit**	B,D
			7,5x17	36	Image Colt	35	41	12	1956,-		
			7,5x17	92	Image Colt L.Gun	35	41	12	1876,-		
			7,5x18	2	Nitro Sapphire FF	35	41	12	3944,-		
			8x18	7	Nitro Spark G.Blk/Grey	35	41	12	3476,-		
			8x18	8	Nitro Spark G.Blk/Red	35	41	12	3476,-		
			8x18	9	Nitro Sabre G.Blk	35	41	12	3496,-		
			8x18	16	Advanti Inizio DST	35	41	12	3828,-		
			8x18	36	Image Colt	35	41	12	2412,-		
			8x18	92	Image Colt L.Gun	35	41	12	2296,-		
			7,5x19	2	Nitro Sapphire FF	35	41	12	4572,-		
			8x19	11	Nitro Demon	38	41	6	3376,-		
			8x19	16	Advanti Inizio DST	45	41	-8	4412,-		
			8,5x19	5	Nitro Volcano G.Gun	35	41	12	4388,-		
			8,5x19	6	Nitro Volcano	35	41	12	4632,-		
			8,5x19	9	Nitro Sabre G.Blk	35	41	12	4292,-		
			8,5x19	36	Image Colt	35	41	12	3028,-		
			8,5x19	92	Image Colt L.Gun	35	41	12	2876,-		
			8x20	2	Nitro Sapphire FF	35	41	12	5096,-		
			8,5x20	1	Nitro Throne FF	40	41	2	5060,-		
			8,5x20	5	Nitro Volcano G.Gun	35	41	12	4824,-		
			8,5x20	6	Nitro Volcano	35	41	12	5164,-		
			8,5x20	7	Nitro Spark G.Blk/Grey	35	41	12	4660,-		
			8,5x20	8	Nitro Spark G.Blk/Red	35	41	12	4660,-		
			8,5x20	9	Nitro Sabre G.Blk	35	41	12	4800,-		
			8,5x20	11	Nitro Demon	38	41	6	3808,-		
			8,5x20	36	Image Colt	35	41	12	3432,-		
			8,5x20	92	Image Colt L.Gun	35	41	12	3276,-		
LEXUS			PCD: **5-114,3** Bolt - Mutter: **12x1,50** CB: **60,1**								
GS (S19)	06.05-11.11	17-20	7,5x17	9	Nitro Sabre G.Blk	35	45	20	3052,-		
			7,5x17	34	CSP 16	40	45	10	1836,-	**OE-fit**	B,D
			7,5x17	35	CSP 16 M.Gun	40	45	10	1836,-	**OE-fit**	B,D
			7,5x17	36	Image Colt	35	45	20	1956,-		
			7,5x17	92	Image Colt L.Gun	35	45	20	1876,-		
			7,5x18	2	Nitro Sapphire FF	35	45	20	3944,-		
			8x18	7	Nitro Spark G.Blk/Grey	35	45	20	3476,-		
			8x18	8	Nitro Spark G.Blk/Red	35	45	20	3476,-		
			8x18	9	Nitro Sabre G.Blk	35	45	20	3496,-		
			8x18	16	Advanti Inizio DST	35	45	20	3828,-		
			8x18	36	Image Colt	35	45	20	2412,-		

Forts. neste side »

Bilmerke - Bilmodell	Årsmodell	Dimensjon	Felgdim.	Bilde	Felgmodell	ET Felg	ET Bil	Avvik ET	Veil. Pris eks. MVA	Merknader	B,C D, M
LEXUS (forts.)				PCD: **5-114,3** Bolt - Mutter: **12x1,50** CB: **60,1**							
			8x18	92	Image Colt L.Gun	35	45	20	2296,-		
			7,5x19	2	Nitro Sapphire FF	35	45	20	4572,-		
			8x19	11	Nitro Demon	38	45	14	3376,-		
			8x19	16	Advanti Inizio DST	35	45	20	4412,-		
			8,5x19	9	Nitro Sabre G.Blk	35	45	20	4292,-		
			8,5x19	36	Image Colt	35	45	20	3028,-		
			8,5x19	92	Image Colt L.Gun	35	45	20	2876,-		
			8x20	2	Nitro Sapphire FF	35	45	20	5096,-		
			8,5x20	7	Nitro Spark G.Blk/Grey	35	45	20	4660,-		
			8,5x20	8	Nitro Spark G.Blk/Red	35	45	20	4660,-		
			8,5x20	9	Nitro Sabre G.Blk	35	45	20	4800,-		
			8,5x20	11	Nitro Demon	38	45	14	3808,-		
			8,5x20	36	Image Colt	35	45	20	3432,-		
			8,5x20	92	Image Colt L.Gun	35	45	20	3276,-		
LEXUS				PCD: **5-114,3** Bolt - Mutter: **12x1,50** CB: **60,1**							
GS (L10)	12.11-	17-21	7,5x17	9	Nitro Sabre G.Blk	35	43	16	3052,-		
GS450h 18"			7,5x17	34	CSP 16	40	43	6	1836,-	**OE-fit**	B,D
			7,5x17	35	CSP 16 M.Gun	40	43	6	1836,-	**OE-fit**	B,D
			7,5x17	36	Image Colt	35	43	16	1956,-		
			7,5x17	92	Image Colt L.Gun	35	43	16	1876,-		
			7,5x18	2	Nitro Sapphire FF	35	43	16	3944,-		
			8x18	7	Nitro Spark G.Blk/Grey	35	43	16	3476,-		
			8x18	8	Nitro Spark G.Blk/Red	35	43	16	3476,-		
			8x18	9	Nitro Sabre G.Blk	35	43	16	3496,-		
			8x18	16	Advanti Inizio DST	35	43	16	3828,-		
			8x18	36	Image Colt	35	43	16	2412,-		
			8x18	92	Image Colt L.Gun	35	43	16	2296,-		
			7,5x19	2	Nitro Sapphire FF	35	43	16	4572,-		
			8x19	11	Nitro Demon	38	43	10	3376,-		
			8x19	16	Advanti Inizio DST	35	43	16	4412,-		
			8,5x19	5	Nitro Volcano G.Gun	35	43	16	4388,-		
			8,5x19	6	Nitro Volcano	35	43	16	4632,-		
			8,5x19	9	Nitro Sabre G.Blk	35	43	16	4292,-		
			8,5x19	36	Image Colt	35	43	16	3028,-		
			8,5x19	92	Image Colt L.Gun	35	43	16	2876,-		
			9x19	11	Nitro Demon	45	43	-4	3376,-	Kun bak	
			8x20	2	Nitro Sapphire FF	35	43	16	5096,-		
			8,5x20	1	Nitro Throne FF	40	43	6	5060,-		
			8,5x20	5	Nitro Volcano G.Gun	35	43	16	4824,-		
			8,5x20	6	Nitro Volcano	35	43	16	5164,-		
			8,5x20	7	Nitro Spark G.Blk/Grey	35	43	16	4660,-		
			8,5x20	8	Nitro Spark G.Blk/Red	35	43	16	4660,-		
			8,5x20	9	Nitro Sabre G.Blk	35	43	16	4800,-		
			8,5x20	11	Nitro Demon	38	43	10	3808,-		
			8,5x20	36	Image Colt	35	43	16	3432,-		
			8,5x20	92	Image Colt L.Gun	35	43	16	3276,-		
			9x21	5	Nitro Volcano G.Gun	45	43	-4	5540,-		M
			9x21	6	Nitro Volcano	45	43	-4	5996,-		M
LEXUS				PCD: **5-114,3** Bolt - Mutter: **12x1,50** CB: **60,1**							
GS (L10) F	01.16-	19-20	7,5x17	34	CSP 16	40	45	10	1836,-	**OE-fit**	B,D
RC (UXC1)	10.15-	17-21	9x19	11	Nitro Demon	45	45	0	3376,-		
RC (UXC1) F	10.14-	19-21									
LEXUS				PCD: **5-114,3** Bolt - Mutter: **12x1,50** CB: **60,1**							
LS (F2)	01.95-12.00	16-20	7,5x17	34	CSP 16	40	50	20	1836,-	**OE-fit**	B,D
LS (F3)	01.01-04.07	17-21	7,5x17	35	CSP 16 M.Gun	40	50	20	1836,-	**OE-fit**	B,D
SC (Z4) 430	12.01-	17-20	8x18	10	Nitro Demon H.Slv	30	50	40	2972,-	**OE-fit**, Lexus OE-mutter	B,D
(orig. Et 45)			8x18	11	Nitro Demon	30	50	40	2784,-	**OE-fit**, Lexus OE-mutter	B,D
			8,5x20	11	Nitro Demon	30	50	40	3808,-	**OE-fit**, Lexus OE-mutter	B,D
LEXUS				PCD: **5-120** Bolt - Mutter: **14x1,50** CB: **60,1**							
LS (F4)	12.06-12.17	18-21	8x18	11	Nitro Demon	30	35	10	2784,-		
LS600h 19"			8x18	46	Image Stella	30	35	10	2276,-		
			8x18	47	Image Stella M.Blk	30	35	10	2276,-		
			8x19	11	Nitro Demon	30	35	10	3376,-		
			8,5x20	11	Nitro Demon	30	35	10	3808,-		
			9x20	5	Nitro Volcano G.Gun	32	35	6	4824,-		
			9x20	6	Nitro Volcano	32	35	6	5164,-		
			9x21	5	Nitro Volcano G.Gun	32	35	6	5540,-		
			9x21	6	Nitro Volcano	32	35	6	5996,-		
LEXUS				PCD: **5-120** Bolt - Mutter: **14x1,50** CB: **60,1**							
LS (F5)	01.18-	19-22	9x19	3	Nitro Turismo FF	25	25	0	4660,-		
LS500 20"			9x19	4	Nitro Turismo FF G.Gun/Pol	25	25	0	4812,-		
LEXUS				PCD: **5-114,3** Bolt - Mutter: **12x1,50** CB: **60,1**							
UX (ZA1)	01.19-	17-21	7x17	17	BM Drive M.Gun	40	45	10	1736,-	**OE-fit**	B,D
			7x17	34	CSP 16	45	45	0	1836,-	**OE-fit**	B,D
			7x17	35	CSP 16 M.Gun	45	45	0	1836,-	**OE-fit**	B,D
			7x17	40	Image Spirit	45	45	0	1476,-		D
			7x17	46	Image Stella	45	45	0	1812,-	**OE-fit**	B,D
			7x17	47	Image Stella M.Blk	45	45	0	1812,-	**OE-fit**	B,D
			7x17	48	Image Motion	45	45	0	1736,-	**OE-fit**	B,D
			7x17	49	Image Motion G.Gun	45	45	0	1736,-	**OE-fit**	B,D
			7,5x17	9	Nitro Sabre G.Blk	45	45	0	3052,-		
			7,5x17	50	Image Legend	45	45	0	1812,-	**OE-fit**	B,D
			7,5x18	34	CSP 16	45	45	0	2444,-	**OE-fit**	B,D
			7,5x18	35	CSP 16 M.Gun	45	45	0	2444,-	**OE-fit**	B,D
			7,5x18	46	Image Stella	45	45	0	2276,-	**OE-fit**	B,D

Forts. neste side »

Bilmerke - Bilmodell	Årsmodell	Dimensjon	Felgdim.	Bilde	Felgmodell	ET Felg	ET Bil	Avvik ET	Veil. Pris eks. MVA	Merknader	B,C D, M
LEXUS (forts.)			PCD: **5-114,3** Bolt - Mutter: **12x1,50**			CB: **60,1**					
			7,5x18	47	Image Stella M.Blk	45	45	0	2276,-	**OE-fit**	B,D
			8x18	7	Nitro Spark G.Blk/Grey	45	45	0	3476,-		
			8x18	8	Nitro Spark G.Blk/Red	45	45	0	3476,-		
			8x18	9	Nitro Sabre G.Blk	45	45	0	3496,-		
			8x18	50	Image Legend	45	45	0	2276,-	**OE-fit**	B,D
			8,5x19	5	Nitro Volcano G.Gun	45	45	0	4388,-		
			8,5x19	6	Nitro Volcano	45	45	0	4632,-		
			8,5x20	1	Nitro Throne FF	40	45	10	5060,-		M
			8,5x20	5	Nitro Volcano G.Gun	45	45	0	4824,-		
			8,5x20	6	Nitro Volcano	45	45	0	5164,-		
LEXUS			PCD: **5-114,3** Bolt - Mutter: **12x1,50**			CB: **60,1**					
NX (AZ1)	09.14-	17-22	7x17	34	CSP 16	35	39	8	1836,-	**OE-fit**, Lexus OE-mutter	B,D
			7x17	35	CSP 16 M.Gun	35	39	8	1836,-	**OE-fit**, Lexus OE-mutter	B,D
			7x17	46	Image Stella	38	39	2	1812,-		B
			7x17	47	Image Stella M.Blk	38	39	2	1812,-		B
			7,5x17	9	Nitro Sabre G.Blk	35	39	8	3052,-		
			7,5x17	36	Image Colt	35	39	8	1956,-		
			7,5x17	92	Image Colt L.Gun	35	39	8	1876,-		
			7,5x18	2	Nitro Sapphire FF	35	39	8	3944,-		
			7,5x18	34	CSP 16	35	39	8	2444,-	**OE-fit**, Lexus OE-mutter	B,D
			7,5x18	35	CSP 16 M.Gun	35	39	8	2444,-	**OE-fit**, Lexus OE-mutter	B,D
			7,5x18	46	Image Stella	38	39	2	2276,-		B
			7,5x18	47	Image Stella M.Blk	38	39	2	2276,-		B
			8x18	7	Nitro Spark G.Blk/Grey	35	39	8	3476,-		
			8x18	8	Nitro Spark G.Blk/Red	35	39	8	3476,-		
			8x18	9	Nitro Sabre G.Blk	35	39	8	3496,-		
			8x18	10	Nitro Demon H.Slv	30	39	18	2972,-	**OE-fit**, Lexus OE-mutter	B,D
			8x18	11	Nitro Demon	30	39	18	2784,-	**OE-fit**, Lexus OE-mutter	B,D
			8x18	16	Advanti Inizio DST	35	39	8	3828,-		
			8x18	36	Image Colt	35	39	8	2412,-		
			8x18	92	Image Colt L.Gun	35	39	8	2296,-		
			7,5x19	2	Nitro Sapphire FF	35	39	8	4572,-		
			8x19	16	Advanti Inizio DST	35	39	8	4412,-		
			8,5x19	5	Nitro Volcano G.Gun	35	39	8	4388,-		
			8,5x19	6	Nitro Volcano	35	39	8	4632,-		
			8,5x19	9	Nitro Sabre G.Blk	35	39	8	4292,-		
			8,5x19	36	Image Colt	35	39	8	3028,-		
			8,5x19	92	Image Colt L.Gun	35	39	8	2876,-		
			8x20	2	Nitro Sapphire FF	35	39	8	5096,-		
			8,5x20	1	Nitro Throne FF	40	39	-2	5060,-		
			8,5x20	5	Nitro Volcano G.Gun	35	39	8	4824,-		
			8,5x20	6	Nitro Volcano	35	39	8	5164,-		
			8,5x20	7	Nitro Spark G.Blk/Grey	35	39	8	4660,-		
			8,5x20	8	Nitro Spark G.Blk/Red	35	39	8	4660,-		
			8,5x20	9	Nitro Sabre G.Blk	35	39	8	4800,-		
			8,5x20	11	Nitro Demon	30	39	18	3808,-	**OE-fit**, Lexus OE-mutter	B,D
			8,5x20	36	Image Colt	35	39	8	3432,-		
			8,5x20	92	Image Colt L.Gun	35	39	8	3276,-		
			9x21	5	Nitro Volcano G.Gun	35	39	8	5540,-		M
			9x21	6	Nitro Volcano	35	39	8	5996,-		M
LEXUS			PCD: **5-114,3** Bolt - Mutter: **12x1,50**			CB: **60,1**					
RX (AL1)	06.09-12.15	18-22	6,5x16	36	Image Colt	35	35	0	1624,-		
RX (XU1)	01.98-01.03	16-20	6,5x16	92	Image Colt L.Gun	35	35	0	1548,-		
RX (XU1)	02.03-06.06	17-20	7x17	34	CSP 16	35	35	0	1836,-	**OE-fit**, Lexus OE-mutter	B,D
RX (XU3)	06.06-05.09	17-22	7x17	35	CSP 16 M.Gun	35	35	0	1836,-	**OE-fit**, Lexus OE-mutter	B,D
			7x17	46	Image Stella	38	35	-6	1812,-		B
			7x17	47	Image Stella M.Blk	38	35	-6	1812,-		B
			7,5x17	9	Nitro Sabre G.Blk	35	35	0	3052,-		
			7,5x17	36	Image Colt	35	35	0	1956,-		
			7,5x17	92	Image Colt L.Gun	35	35	0	1876,-		
			7,5x18	2	Nitro Sapphire FF	35	35	0	3944,-		
			7,5x18	34	CSP 16	35	35	0	2444,-	**OE-fit**, Lexus OE-mutter	B,D
			7,5x18	35	CSP 16 M.Gun	35	35	0	2444,-	**OE-fit**, Lexus OE-mutter	B,D
			7,5x18	46	Image Stella	38	35	-6	2276,-		B
			7,5x18	47	Image Stella M.Blk	38	35	-6	2276,-		B
			8x18	7	Nitro Spark G.Blk/Grey	35	35	0	3476,-		
			8x18	8	Nitro Spark G.Blk/Red	35	35	0	3476,-		
			8x18	9	Nitro Sabre G.Blk	35	35	0	3496,-		
			8x18	10	Nitro Demon H.Slv	30	35	10	2972,-	**OE-fit**, Lexus OE-mutter	B,D
			8x18	11	Nitro Demon	30	35	10	2784,-	**OE-fit**, Lexus OE-mutter	B,D
			8x18	16	Advanti Inizio DST	35	35	0	3828,-		
			8x18	36	Image Colt	35	35	0	2412,-		
			8x18	92	Image Colt L.Gun	35	35	0	2296,-		
			7,5x19	2	Nitro Sapphire FF	35	35	0	4572,-		
			8x19	16	Advanti Inizio DST	35	35	0	4412,-		
			8,5x19	5	Nitro Volcano G.Gun	35	35	0	4388,-		
			8,5x19	6	Nitro Volcano	35	35	0	4632,-		
			8,5x19	9	Nitro Sabre G.Blk	35	35	0	4292,-		
			8,5x19	36	Image Colt	35	35	0	3028,-		
			8,5x19	92	Image Colt L.Gun	35	35	0	2876,-		
			8x20	2	Nitro Sapphire FF	35	35	0	5096,-		
			8,5x20	5	Nitro Volcano G.Gun	35	35	0	4824,-		
			8,5x20	6	Nitro Volcano	35	35	0	5164,-		
			8,5x20	7	Nitro Spark G.Blk/Grey	35	35	0	4660,-		
			8,5x20	8	Nitro Spark G.Blk/Red	35	35	0	4660,-		
			8,5x20	9	Nitro Sabre G.Blk	35	35	0	4800,-		

Forts. neste side »

Bilmerke - Bilmodell	Årsmodell	Dimensjon	Felgdim.	Bilde	Felgmodell	ET Felg	ET Bil	Avvik ET	Veil. Pris eks. MVA	Merknader	B,C D, M
LEXUS (forts.)				PCD: **5-114,3** Bolt - Mutter: **12x1,50** CB: **60,1**							
			8,5x20	11	Nitro Demon	30	35	10	3808,-	**OE-fit**, Lexus OE-mutter	B,D
			8,5x20	36	Image Colt	35	35	0	3432,-		
			8,5x20	92	Image Colt L.Gun	35	35	0	3276,-		
			9x21	5	Nitro Volcano G.Gun	35	35	0	5540,-		M
			9x21	6	Nitro Volcano	35	35	0	5996,-		M
LEXUS				PCD: **5-114,3** Bolt - Mutter: **12x1,50** CB: **60,1**							
RX (AL2)	01.16-	18-22	7,5x18	2	Nitro Sapphire FF	35	30	-10	3944,-		
			8x18	7	Nitro Spark G.Blk/Grey	35	30	-10	3476,-		
			8x18	8	Nitro Spark G.Blk/Red	35	30	-10	3476,-		
			8x18	9	Nitro Sabre G.Blk	35	30	-10	3496,-		
			8x18	10	Nitro Demon H.Slv	30	30	0	2972,-	**OE-fit**, Lexus OE-mutter	B,D
			8x18	11	Nitro Demon	30	30	0	2784,-	**OE-fit**, Lexus OE-mutter	B,D
			8x18	16	Advanti Inizio DST	35	30	-10	3828,-		
			8x18	36	Image Colt	35	30	-10	2412,-		
			8x18	92	Image Colt L.Gun	35	30	-10	2296,-		
			7,5x19	2	Nitro Sapphire FF	35	30	-10	4572,-		
			8x19	16	Advanti Inizio DST	35	30	-10	4412,-		
			8,5x19	5	Nitro Volcano G.Gun	35	30	-10	4388,-		
			8,5x19	6	Nitro Volcano	35	30	-10	4632,-		
			8,5x19	9	Nitro Sabre G.Blk	35	30	-10	4292,-		
			8,5x19	36	Image Colt	35	30	-10	3028,-		
			8,5x19	92	Image Colt L.Gun	35	30	-10	2876,-		
			8x20	2	Nitro Sapphire FF	35	30	-10	5096,-		
			8,5x20	5	Nitro Volcano G.Gun	35	30	-10	4824,-		
			8,5x20	6	Nitro Volcano	35	30	-10	5164,-		
			8,5x20	7	Nitro Spark G.Blk/Grey	35	30	-10	4660,-		
			8,5x20	8	Nitro Spark G.Blk/Red	35	30	-10	4660,-		
			8,5x20	9	Nitro Sabre G.Blk	35	30	-10	4800,-		
			8,5x20	11	Nitro Demon	30	30	0	3808,-	**OE-fit**, Lexus OE-mutter	B,D
			8,5x20	36	Image Colt	35	30	-10	3432,-		
			8,5x20	92	Image Colt L.Gun	35	30	-10	3276,-		
			9x21	5	Nitro Volcano G.Gun	35	30	-10	5540,-		M
			9x21	6	Nitro Volcano	35	30	-10	5996,-		M
LEXUS				PCD: **6-139,7** Bolt - Mutter: **12x1,50** CB: **106,0**							
GX (J120) 470	11.02-10.09	17-26	7,5x17	69	BM Macho M.Blk	25	30	10	2756,-		
GX (J150) 460	11.09-	18-24	9x17	74	Ballistic Morax	12	30	36	4020,-		
			8x18	68	BM Macho	20	30	20	3300,-		
			8x18	69	BM Macho M.Blk	20	30	20	3300,-		
			9x18	74	Ballistic Morax	12	30	36	4276,-		
			9x20	68	BM Macho	20	30	20	4288,-		
			9x20	69	BM Macho M.Blk	20	30	20	4288,-		
			9x20	72	Ballistic Dakota	25	30	10	4624,-		
			9x20	74	Ballistic Morax	12	30	36	4740,-		
			9x22	72	Ballistic Dakota	25	30	10	5128,-		
LINCOLN				PCD: **5-108** Bolt - Mutter: **12x1,50** CB: **63,4**							
Continental	88-01	15-18	6,5x16	36	Image Colt	40	42	4	1624,-		
LS	00-07	15-18	6,5x16	92	Image Colt L.Gun	40	42	4	1548,-		
Mark VIII	93-98	15-18									
LINCOLN				PCD: **6-135** Bolt - Mutter: **14x2** CB: **87,1**							
Mark LT	01.05-12.08	18-24	8x18	68	BM Macho	40	44	8	3300,-		D
Navigator	01.02-	17-26	8x18	69	BM Macho M.Blk	40	44	8	3300,-		D
			9x20	69	BM Macho M.Blk	40	44	8	4288,-		D
			9x20	72	Ballistic Dakota	38	44	12	4624,-		D
			9x22	72	Ballistic Dakota	38	44	12	5128,-		D
MAN				PCD: **5-120** Bolt - Mutter: **14x1,50B** CB: **65,1**							
TGE (SY1NE) 30/35	06.17-	16-22	6,5x16	58	Image Strong	60	60	0	2500,-	**OE-fit**	B,D
			6,5x16	59	Image Strong M.Gun	60	60	0	2500,-	**OE-fit**	B,D
			6,5x16	61	Image Solid	60	60	0	2552,-	**OE-fit**, Maks bel. 1400 kg	B,D
			6,5x17	58	Image Strong	60	60	0	2884,-	**OE-fit**	B,D
			6,5x17	59	Image Strong M.Gun	60	60	0	2884,-	**OE-fit**	B,D
			7,5x18	58	Image Strong	55	60	10	3524,-	**OE-fit**, Maks bel. 1400 kg	B,D
			7,5x18	59	Image Strong M.Gun	55	60	10	3524,-	**OE-fit**, Maks bel. 1400 kg	B,D
			9x20	72	Ballistic Dakota	45	60	30	4624,-	Maks bel. 955 kg	D
			9x22	72	Ballistic Dakota	45	60	30	5128,-	Maks bel. 955 kg	D
MASERATI				PCD: **5-114** Bolt - Mutter: **14x1,50B** CB: **67,1**							
Levante (M156)	10.16-	19-22	8x19	11	Nitro Demon	38	44	12	3376,-		
S 19"			8,5x20	11	Nitro Demon	38	44	12	3808,-		
MAZDA				PCD: **4-108** Bolt - Mutter: **12x1,50** CB: **63,4**							
2	04.03-09.07	14-18	5,5x14	37	Image Comet	37	48	21	1264,-		D
			5,5x14	45	Image Ride	38	48	19	1392,-		D
			6x15	19	ATS Streetrallye Slv	38	48	19	1960,-		D
			6x15	37	Image Comet	45	48	5	1316,-		D
			6x15	42	Image Brio	38	48	19	1304,-		D
			6x15	45	Image Ride	38	48	19	1552,-		D
			6x16	19	ATS Streetrallye Slv	35	48	25	2240,-		D
			6x16	37	Image Comet	40	48	15	1536,-		D
			6x16	38	Image Comet Slv	40	48	15	1536,-		D
			6,5x16	42	Image Brio	38	48	19	1524,-		D
			7x17	42	Image Brio	38	48	19	1832,-		D

Bilmerke - Bilmodell	Årsmodell	Dimensjon	Felgdim.	Bilde	Felgmodell	ET Felg	ET Bil	Avvik ET	Veil. Pris eks. MVA	Merknader	B,C D, M
MAZDA				PCD: **4-100** Bolt - Mutter: **12x1,50**	CB: **54,1**						
121	03.91-02.96	13-14	5x13	45	Image Ride	38	45	14	1336,-		
2 (DE)	10.07-05.14	14-18	5x14	34	CSP 16	35	45	20	1176,-		D
323	10.89-08.94	13-17	5x14	35	CSP 16 M.Gun	35	45	20	1176,-		D
323	09.94-08.98	13-17	5,5x14	37	Image Comet	45	45	0	1264,-		D
323	09.98-01.01	14-18	5,5x14	45	Image Ride	38	45	14	1392,-		
323	02.01-08.03	14-18	5,5x15	34	CSP 16	36	45	18	1228,-	**OE-fit**	B,D
Demio	10.98-03.03	13-15	6x15	19	ATS Streetrallye Slv	38	45	14	1960,-		
MX-3	08.91-01.99	14-18	6x15	37	Image Comet	45	45	0	1316,-	**OE-fit**	B,D
MX-5 (ND) cab	09.15-	16-18	6x15	42	Image Brio	40	45	10	1304,-		B
MX-5 Miata	03.90-09.05	14-18	6x15	45	Image Ride	38	45	14	1552,-		
			6x16	37	Image Comet	40	45	10	1536,-		B
			6x16	38	Image Comet Slv	40	45	10	1536,-		B
			6,5x16	19	ATS Streetrallye Slv	40	45	10	2240,-		
			6,5x16	34	CSP 16	40	45	10	1468,-		
			6,5x16	42	Image Brio	38	45	14	1524,-		B
			7x17	18	ATS Streetrallye Blk	45	45	0	3344,-		
			7x17	42	Image Brio	40	45	10	1832,-		B
			7,5x18	18	ATS Streetrallye Blk	38	45	14	4180,-		M
MAZDA				PCD: **4-100** Bolt - Mutter: **12x1,50**	CB: **54,1**						
2 (DJ1)	06.14-	15-19	5,5x15	34	CSP 16	36	40	8	1228,-	**OE-fit**	B,D
			6x15	19	ATS Streetrallye Slv	38	40	4	1960,-		
			6x15	37	Image Comet	40	40	0	1316,-		B
			6x15	38	Image Comet Slv	40	40	0	1316,-		B
			6x15	42	Image Brio	40	40	0	1304,-		B
			6x15	45	Image Ride	38	40	4	1552,-		
			6x16	37	Image Comet	40	40	0	1536,-		B
			6x16	38	Image Comet Slv	40	40	0	1536,-		B
			6,5x16	19	ATS Streetrallye Slv	40	40	0	2240,-		
			6,5x16	34	CSP 16	40	40	0	1468,-		
			6,5x16	42	Image Brio	38	40	4	1524,-		B
			7x17	42	Image Brio	40	40	0	1832,-		B
			7,5x18	18	ATS Streetrallye Blk	38	40	4	4180,-		M
MAZDA				PCD: **5-114,3** Bolt - Mutter: **12x1,50**	CB: **67,1**						
3 (BK)	09.03-04.09	15-20	6x15	34	CSP 16	48	50	4	1228,-	**OE-fit**	B,D
2.0 16"			6x15	48	Image Motion	45	50	10	1224,-	**OE-fit**	B,D
3 (BL)	05.09-09.13	15-20	6,5x16	34	CSP 16	50	50	0	1468,-	**OE-fit**	B,D
2.0, 2.2D 16"			6,5x16	35	CSP 16 M.Gun	50	50	0	1468,-	**OE-fit**	B,D
3 (BL)	10.13-01.19	16-20	6,5x16	36	Image Colt	45	50	10	1624,-		
3 (BL) MPS	09.09-09.13	17-20	6,5x16	40	Image Spirit	45	50	10	1264,-	**OE-fit**	B,D
3 MPS	12.06-04.09	17-20	6,5x16	46	Image Stella	45	50	10	1548,-	**OE-fit**	B,D
323 5-bult	09.94-08.98	15-18	6,5x16	47	Image Stella M.Blk	45	50	10	1548,-	**OE-fit**	B,D
323 5-bult	10.00-08.03	15-18	6,5x16	48	Image Motion	45	50	10	1468,-	**OE-fit**	B,D
5 (CR1)	08.05-08.10	15-20	6,5x16	49	Image Motion G.Gun	45	50	10	1468,-	**OE-fit**	B,D
2.0, 2.0D 16"			6,5x16	50	Image Legend	45	50	10	1544,-	**OE-fit**	B,D
5 (CW)	09.10-	16-20	6,5x16	92	Image Colt L.Gun	45	50	10	1548,-		
6 (GG)	06.02-01.08	15-20	7x16	17	BM Drive M.Gun	45	50	10	1476,-		D
6 (GH)	02.08-01.13	16-20	7x17	17	BM Drive M.Gun	50	50	0	1736,-		D
6 MPS	03.06-01.08	17-20	7x17	34	CSP 16	50	50	0	1836,-	**OE-fit**	B,D
626	09.97-05.02	14-19	7x17	35	CSP 16 M.Gun	50	50	0	1836,-	**OE-fit**	B,D
MPV	09.99-08.02	15-20	7x17	40	Image Spirit	45	50	10	1476,-	**OE-fit**	B,D
MPV	09.02-06.06	16-20	7x17	46	Image Stella	45	50	10	1812,-	**OE-fit**	B,D
MX-5 Miata	10.05-08.15	16-19	7x17	47	Image Stella M.Blk	45	50	10	1812,-	**OE-fit**	B,D
Premacy	06.99-07.05	14-18	7x17	48	Image Motion	45	50	10	1736,-	**OE-fit**	B,D
RX-8	09.03-06.12	17-20	7x17	49	Image Motion G.Gun	45	50	10	1736,-	**OE-fit**	B,D
Xedos 6 & 9	09.92-05.00	15-18	7,5x17	9	Nitro Sabre G.Blk	45	50	10	3052,-		
			7,5x17	36	Image Colt	45	50	10	1956,-		
			7,5x17	50	Image Legend	45	50	10	1812,-	**OE-fit**	B,D
			7,5x17	92	Image Colt L.Gun	45	50	10	1876,-		
			7,5x18	2	Nitro Sapphire FF	45	50	10	3944,-		
			7,5x18	34	CSP 16	48	50	4	2444,-	**OE-fit**	B,D
			7,5x18	35	CSP 16 M.Gun	48	50	4	2444,-	**OE-fit**	B,D
			7,5x18	46	Image Stella	45	50	10	2276,-		D
			7,5x18	47	Image Stella M.Blk	45	50	10	2276,-		D
			8x18	7	Nitro Spark G.Blk/Grey	45	50	10	3476,-		
			8x18	8	Nitro Spark G.Blk/Red	45	50	10	3476,-		
			8x18	9	Nitro Sabre G.Blk	45	50	10	3496,-		
			8x18	11	Nitro Demon	48	50	4	2784,-		
			8x18	16	Advanti Inizio DST	45	50	10	3828,-		
			8x18	36	Image Colt	45	50	10	2412,-		
			8x18	48	Image Motion	45	50	10	2204,-	**OE-fit**	B,D
			8x18	49	Image Motion G.Gun	45	50	10	2204,-	**OE-fit**	B,D
			8x18	50	Image Legend	45	50	10	2276,-	**OE-fit**	B,D
			8x18	92	Image Colt L.Gun	45	50	10	2296,-		
			7,5x19	2	Nitro Sapphire FF	45	50	10	4572,-		
			8x19	16	Advanti Inizio DST	45	50	10	4412,-		
			8,5x19	5	Nitro Volcano G.Gun	45	50	10	4388,-		B,M
			8,5x19	6	Nitro Volcano	45	50	10	4632,-		B,M
			8,5x19	9	Nitro Sabre G.Blk	45	50	10	4292,-		M
			8,5x19	36	Image Colt	45	50	10	3028,-		M
			8,5x19	92	Image Colt L.Gun	45	50	10	2876,-		M
			8x20	2	Nitro Sapphire FF	45	50	10	5096,-		
			8,5x20	5	Nitro Volcano G.Gun	45	50	10	4824,-		B,M
			8,5x20	6	Nitro Volcano	45	50	10	5164,-		B,M
			8,5x20	7	Nitro Spark G.Blk/Grey	45	50	10	4660,-		M
			8,5x20	8	Nitro Spark G.Blk/Red	45	50	10	4660,-		M
			8,5x20	9	Nitro Sabre G.Blk	45	50	10	4800,-		M

Forts. neste side »

Bilmerke - Bilmodell	Årsmodell	Dimensjon	Felgdim.	Bilde	Felgmodell	ET Felg	ET Bil	Avvik ET	Veil. Pris eks. MVA	Merknader	B,C D, M
MAZDA (forts.)				PCD: **5-114,3**	Bolt - Mutter: **12x1,50**	CB: **67,1**					
			8,5x20	36	Image Colt	45	50	10	3432,-		M
			8,5x20	92	Image Colt L.Gun	45	50	10	3276,-		M
MAZDA				PCD: **5-114,3**	Bolt - Mutter: **12x1,50**	CB: **67,1**					
3 (BP)	02.19-	16-20	6,5x16	34	CSP 16	45	45	0	1468,-	**OE-fit**	B,D
CX-30 (DM)	06.19-	16-20	6,5x16	35	CSP 16 M.Gun	45	45	0	1468,-	**OE-fit**	B,D
AWD 17"			6,5x16	36	Image Colt	45	45	0	1624,-		
			6,5x16	40	Image Spirit	45	45	0	1264,-	**OE-fit**	B,D
			6,5x16	46	Image Stella	45	45	0	1548,-	**OE-fit**	B,D
			6,5x16	47	Image Stella M.Blk	45	45	0	1548,-	**OE-fit**	B,D
			6,5x16	48	Image Motion	45	45	0	1468,-	**OE-fit**	B,D
			6,5x16	49	Image Motion G.Gun	45	45	0	1468,-	**OE-fit**	B,D
			6,5x16	50	Image Legend	45	45	0	1544,-	**OE-fit**	B,D
			6,5x16	92	Image Colt L.Gun	45	45	0	1548,-		
			7x16	17	BM Drive M.Gun	45	45	0	1476,-	**OE-fit**	B,D
			7x17	34	CSP 16	45	45	0	1836,-	**OE-fit**	B,D
			7x17	40	Image Spirit	45	45	0	1476,-	**OE-fit**	B,D
			7x17	46	Image Stella	45	45	0	1812,-	**OE-fit**	B,D
			7x17	47	Image Stella M.Blk	45	45	0	1812,-	**OE-fit**	B,D
			7x17	48	Image Motion	45	45	0	1736,-	**OE-fit**	B,D
			7x17	49	Image Motion G.Gun	45	45	0	1736,-	**OE-fit**	B,D
			7,5x17	9	Nitro Sabre G.Blk	45	45	0	3052,-		
			7,5x17	36	Image Colt	45	45	0	1956,-		
			7,5x17	50	Image Legend	45	45	0	1812,-	**OE-fit**	B,D
			7,5x17	92	Image Colt L.Gun	45	45	0	1876,-		
			7,5x18	2	Nitro Sapphire FF	45	45	0	3944,-		
			7,5x18	46	Image Stella	45	45	0	2276,-	**OE-fit**	B,D
			7,5x18	47	Image Stella M.Blk	45	45	0	2276,-	**OE-fit**	B,D
			8x18	7	Nitro Spark G.Blk/Grey	45	45	0	3476,-		
			8x18	8	Nitro Spark G.Blk/Red	45	45	0	3476,-		
			8x18	9	Nitro Sabre G.Blk	45	45	0	3496,-		
			8x18	16	Advanti Inizio DST	45	45	0	3828,-		
			8x18	36	Image Colt	45	45	0	2412,-		
			8x18	48	Image Motion	45	45	0	2204,-	**OE-fit**	B,D
			8x18	49	Image Motion G.Gun	45	45	0	2204,-	**OE-fit**	B,D
			8x18	50	Image Legend	45	45	0	2276,-	**OE-fit**	B,D
			8x18	92	Image Colt L.Gun	45	45	0	2296,-		
			7,5x19	2	Nitro Sapphire FF	45	45	0	4572,-		
			8x19	16	Advanti Inizio DST	45	45	0	4412,-		
			8,5x19	5	Nitro Volcano G.Gun	45	45	0	4388,-		B,M
			8,5x19	6	Nitro Volcano	45	45	0	4632,-		B,M
			8,5x19	9	Nitro Sabre G.Blk	45	45	0	4292,-		M
			8,5x19	36	Image Colt	45	45	0	3028,-		M
			8,5x19	92	Image Colt L.Gun	45	45	0	2876,-		M
			8x20	2	Nitro Sapphire FF	45	45	0	5096,-		
			8,5x20	5	Nitro Volcano G.Gun	45	45	0	4824,-		B,M
			8,5x20	6	Nitro Volcano	45	45	0	5164,-		B,M
			8,5x20	7	Nitro Spark G.Blk/Grey	45	45	0	4660,-		M
			8,5x20	8	Nitro Spark G.Blk/Red	45	45	0	4660,-		M
			8,5x20	9	Nitro Sabre G.Blk	45	45	0	4800,-		M
			8,5x20	36	Image Colt	45	45	0	3432,-		M
			8,5x20	92	Image Colt L.Gun	45	45	0	3276,-		M
MAZDA				PCD: **5-114,3**	Bolt - Mutter: **12x1,50**	CB: **67,1**					
6 (GJ)	02.13-08.16	16-21	6,5x16	34	CSP 16	50	50	0	1468,-	**OE-fit**	B,D
6 (GJ) facelift	09.16-	17-21	6,5x16	35	CSP 16 M.Gun	50	50	0	1468,-	**OE-fit**	B,D
CX-3 (DJ1)	06.15-	16-20	6,5x16	36	Image Colt	45	50	10	1624,-		
			6,5x16	40	Image Spirit	45	50	10	1264,-	**OE-fit**	B,D
			6,5x16	46	Image Stella	45	50	10	1548,-	**OE-fit**	B,D
			6,5x16	47	Image Stella M.Blk	45	50	10	1548,-	**OE-fit**	B,D
			6,5x16	48	Image Motion	45	50	10	1468,-	**OE-fit**	B,D
			6,5x16	49	Image Motion G.Gun	45	50	10	1468,-	**OE-fit**	B,D
			6,5x16	50	Image Legend	45	50	10	1544,-	**OE-fit**	B,D
			6,5x16	92	Image Colt L.Gun	45	50	10	1548,-		
			7x16	17	BM Drive M.Gun	45	50	10	1476,-		D
			7x17	17	BM Drive M.Gun	50	50	0	1736,-		D
			7x17	34	CSP 16	50	50	0	1836,-	**OE-fit**	B,D
			7x17	35	CSP 16 M.Gun	50	50	0	1836,-	**OE-fit**	B,D
			7x17	40	Image Spirit	45	50	10	1476,-	**OE-fit**	B,D
			7x17	46	Image Stella	50	50	0	1812,-	**OE-fit**	B,D
			7x17	47	Image Stella M.Blk	50	50	0	1812,-	**OE-fit**	B,D
			7x17	48	Image Motion	45	50	10	1736,-	**OE-fit**	B,D
			7x17	49	Image Motion G.Gun	45	50	10	1736,-	**OE-fit**	B,D
			7,5x17	9	Nitro Sabre G.Blk	45	50	10	3052,-		
			7,5x17	36	Image Colt	45	50	10	1956,-		
			7,5x17	50	Image Legend	45	50	10	1812,-	**OE-fit**	B,D
			7,5x17	92	Image Colt L.Gun	45	50	10	1876,-		
			7,5x18	2	Nitro Sapphire FF	45	50	10	3944,-		
			7,5x18	34	CSP 16	48	50	4	2444,-	**OE-fit**	B,D
			7,5x18	35	CSP 16 M.Gun	48	50	4	2444,-	**OE-fit**	B,D
			7,5x18	46	Image Stella	45	50	10	2276,-	**OE-fit**	B,D
			7,5x18	47	Image Stella M.Blk	45	50	10	2276,-	**OE-fit**	B,D
			8x18	7	Nitro Spark G.Blk/Grey	45	50	10	3476,-		
			8x18	8	Nitro Spark G.Blk/Red	45	50	10	3476,-		
			8x18	9	Nitro Sabre G.Blk	45	50	10	3496,-		
			8x18	11	Nitro Demon	48	50	4	2784,-		
			8x18	16	Advanti Inizio DST	45	50	10	3828,-		
			8x18	36	Image Colt	45	50	10	2412,-		

Forts. neste side »

Bilmerke - Bilmodell	Årsmodell	Dimensjon	Felgdim.	Bilde	Felgmodell	ET Felg	ET Bil	Avvik ET	Veil. Pris eks. MVA	Merknader	B,C D, M
MAZDA (forts.)			PCD: **5-114,3** Bolt - Mutter: **12x1,50** CB: **67,1**								
			8x18	48	Image Motion	45	50	10	2204,-	**OE-fit**	B,D
			8x18	49	Image Motion G.Gun	45	50	10	2204,-	**OE-fit**	B,D
			8x18	50	Image Legend	45	50	10	2276,-	**OE-fit**	B,D
			8x18	92	Image Colt L.Gun	45	50	10	2296,-		
			7,5x19	2	Nitro Sapphire FF	45	50	10	4572,-		
			8x19	16	Advanti Inizio DST	45	50	10	4412,-		
			8,5x19	5	Nitro Volcano G.Gun	45	50	10	4388,-		B,M
			8,5x19	6	Nitro Volcano	45	50	10	4632,-		B,M
			8,5x19	9	Nitro Sabre G.Blk	45	50	10	4292,-		M
			8,5x19	36	Image Colt	45	50	10	3028,-		M
			8,5x19	92	Image Colt L.Gun	45	50	10	2876,-		M
			8x20	2	Nitro Sapphire FF	45	50	10	5096,-		
			8,5x20	5	Nitro Volcano G.Gun	45	50	10	4824,-		B,M
			8,5x20	6	Nitro Volcano	45	50	10	5164,-		B,M
			8,5x20	7	Nitro Spark G.Blk/Grey	45	50	10	4660,-		M
			8,5x20	8	Nitro Spark G.Blk/Red	45	50	10	4660,-		M
			8,5x20	9	Nitro Sabre G.Blk	45	50	10	4800,-		M
			8,5x20	36	Image Colt	45	50	10	3432,-		M
			8,5x20	92	Image Colt L.Gun	45	50	10	3276,-		M
			9x21	5	Nitro Volcano G.Gun	45	50	10	5540,-		M
			9x21	6	Nitro Volcano	45	50	10	5996,-		M
MAZDA			PCD: **5-114,3** Bolt - Mutter: **12x1,50** CB: **67,1**								
CX-5 (KE)	02.12-02.17	17-20	7x17	17	BM Drive M.Gun	50	50	0	1736,-		D
CX-5 (KF)	03.17-	17-22	7x17	34	CSP 16	50	50	0	1836,-	**OE-fit**	B,D
CX-7 (ER)	08.07-	17-20	7x17	35	CSP 16 M.Gun	50	50	0	1836,-	**OE-fit**	B,D
CX-9	01.07-10.15	17-20	7x17	40	Image Spirit	45	50	10	1476,-	**OE-fit**	B,D
Facelift 13- 18"			7x17	46	Image Stella	45	50	10	1812,-	**OE-fit**	B,D
CX-9	11.15-	18-22	7x17	47	Image Stella M.Blk	45	50	10	1812,-	**OE-fit**	B,D
			7x17	48	Image Motion	45	50	10	1736,-	**OE-fit**	B,D
			7x17	49	Image Motion G.Gun	45	50	10	1736,-	**OE-fit**	B,D
			7,5x17	9	Nitro Sabre G.Blk	45	50	10	3052,-		
			7,5x17	36	Image Colt	45	50	10	1956,-		
			7,5x17	50	Image Legend	45	50	10	1812,-	**OE-fit**	B,D
			7,5x17	92	Image Colt L.Gun	45	50	10	1876,-		
			7,5x18	2	Nitro Sapphire FF	45	50	10	3944,-		
			7,5x18	34	CSP 16	48	50	4	2444,-	**OE-fit**	B,D
			7,5x18	35	CSP 16 M.Gun	48	50	4	2444,-	**OE-fit**	B,D
			7,5x18	46	Image Stella	45	50	10	2276,-	**OE-fit**	B,D
			7,5x18	47	Image Stella M.Blk	45	50	10	2276,-	**OE-fit**	B,D
			8x18	7	Nitro Spark G.Blk/Grey	45	50	10	3476,-		
			8x18	8	Nitro Spark G.Blk/Red	45	50	10	3476,-		
			8x18	9	Nitro Sabre G.Blk	45	50	10	3496,-		
			8x18	11	Nitro Demon	48	50	4	2784,-		
			8x18	16	Advanti Inizio DST	45	50	10	3828,-		
			8x18	36	Image Colt	45	50	10	2412,-		
			8x18	48	Image Motion	45	50	10	2204,-	**OE-fit**	B,D
			8x18	49	Image Motion G.Gun	45	50	10	2204,-	**OE-fit**	B,D
			8x18	50	Image Legend	45	50	10	2276,-	**OE-fit**	B,D
			8x18	92	Image Colt L.Gun	45	50	10	2296,-		
			7,5x19	2	Nitro Sapphire FF	45	50	10	4572,-		
			8x19	16	Advanti Inizio DST	45	50	10	4412,-		
			8,5x19	5	Nitro Volcano G.Gun	45	50	10	4388,-		B
			8,5x19	6	Nitro Volcano	45	50	10	4632,-		B
			8,5x19	9	Nitro Sabre G.Blk	45	50	10	4292,-		
			8,5x19	36	Image Colt	45	50	10	3028,-		
			8,5x19	92	Image Colt L.Gun	45	50	10	2876,-		
			8x20	2	Nitro Sapphire FF	45	50	10	5096,-		
			8,5x20	1	Nitro Throne FF	40	50	20	5060,-		M
			8,5x20	5	Nitro Volcano G.Gun	45	50	10	4824,-		B
			8,5x20	6	Nitro Volcano	45	50	10	5164,-		B
			8,5x20	7	Nitro Spark G.Blk/Grey	45	50	10	4660,-		M
			8,5x20	8	Nitro Spark G.Blk/Red	45	50	10	4660,-		M
			8,5x20	9	Nitro Sabre G.Blk	45	50	10	4800,-		
			8,5x20	36	Image Colt	45	50	10	3432,-		
			8,5x20	92	Image Colt L.Gun	45	50	10	3276,-		
			9x21	5	Nitro Volcano G.Gun	45	50	10	5540,-		B,M
			9x21	6	Nitro Volcano	45	50	10	5996,-		B,M
MAZDA			PCD: **5-114,3** Bolt - Mutter: **12x1,50** CB: **67,1**								
Tribute (EP)	09.01-06.06	16-20	6,5x16	48	Image Motion	45	50	10	1468,-	**OE-fit**	B,D
			6,5x16	49	Image Motion G.Gun	45	50	10	1468,-	**OE-fit**	B,D
			6,5x16	50	Image Legend	45	50	10	1544,-	**OE-fit**	B,D
			7x17	48	Image Motion	45	50	10	1736,-	**OE-fit**	B,D
			7x17	49	Image Motion G.Gun	45	50	10	1736,-	**OE-fit**	B,D
MAZDA			PCD: **6-139,7** Bolt - Mutter: **12x1,50** CB: **93,1**								
E 2000/2200	-12.99	14-16	6x15	65	CSP Work	27	50	46	2196,-	Maks bel. 955 kg	
(orig. Et 40)											
E 2000/2200	01.00-	14-16									
MAZDA			PCD: **6-139,7** Bolt - Mutter: **12x1,50** CB: **93,1**								
Pick-up 2wd	-06	14-16	6x15	65	CSP Work	27	25	-4	2196,-		
MAZDA			PCD: **6-139,7** Bolt - Mutter: **12x1,50** CB: **93,1**								
Pick-up 4wd	-98	15-20	8x16	78	Advanti Peak	5	30	50	2692,-		M

Bilmerke - Bilmodell	Årsmodell	Dimensjon	Felgdim.	Bilde	Felgmodell	ET Felg	ET Bil	Avvik ET	Veil. Pris eks. MVA	Merknader	B,C D, M
MAZDA				PCD: **6-139,7** Bolt - Mutter: **12x1,50**	CB: **93,1**						
Pick-up B2500 4wd	99-06	15-24	7x16	68	BM Macho	25	30	10	2396,-		
Pick-up B2600 4wd	99-06	15-24	7x16	69	BM Macho M.Blk	25	30	10	2396,-		
			8x16	78	Advanti Peak	5	30	50	2692,-		M
			7,5x17	68	BM Macho	25	30	10	2756,-		
			7,5x17	69	BM Macho M.Blk	25	30	10	2756,-		
			9x17	74	Ballistic Morax	12	30	36	4020,-		M
			8x18	68	BM Macho	20	30	20	3300,-		
			8x18	69	BM Macho M.Blk	20	30	20	3300,-		
			9x18	74	Ballistic Morax	12	30	36	4276,-		M
			9x20	68	BM Macho	20	30	20	4288,-		
			9x20	69	BM Macho M.Blk	20	30	20	4288,-		
			9x20	74	Ballistic Morax	12	30	36	4740,-		M
MAZDA				PCD: **6-139,7** Bolt - Mutter: **12x1,50**	CB: **93,1**						
Pick-up BT-50 2wd	01.07-	15-20	7x16	68	BM Macho	25	25	0	2396,-		
Pick-up BT-50 4wd	01.07-	15-24	7x16	69	BM Macho M.Blk	25	25	0	2396,-		
			8x16	78	Advanti Peak	5	25	40	2692,-		M
			7,5x17	67	Image Rock	20	25	10	2796,-		
			7,5x17	68	BM Macho	25	25	0	2756,-		
			7,5x17	69	BM Macho M.Blk	25	25	0	2756,-		
			9x17	74	Ballistic Morax	12	25	26	4020,-		M
			7,5x18	67	Image Rock	20	25	10	3324,-		
			8x18	68	BM Macho	20	25	10	3300,-		
			8x18	69	BM Macho M.Blk	20	25	10	3300,-		
			9x18	74	Ballistic Morax	12	25	26	4276,-		M
			9x20	68	BM Macho	20	25	10	4288,-		
			9x20	69	BM Macho M.Blk	20	25	10	4288,-		
			9x20	72	Ballistic Dakota	25	25	0	4624,-		
			9x20	74	Ballistic Morax	12	25	26	4740,-		M
			9x22	72	Ballistic Dakota	25	25	0	5128,-		
MERCEDES				PCD: **5-112** Bolt - Mutter: **12x1,50B**	CB: **66,6**						
A-Class (W168)	08.98-08.04	15-18	6,5x16	24	ATS Mizar	49	54	10	1812,-		C,D
A190, A210 16"			6,5x16	25	ATS Mizar G.Blk	49	54	10	1880,-		C,D
			6,5x16	26	CSP 18 G.Blk/pol	46	54	16	1896,-		D
			6,5x16	27	CSP 18	46	54	16	1760,-		D
			6,5x16	28	CSP 18 G.Blk	46	54	16	1760,-		D
			6,5x16	36	Image Colt	45	54	18	1624,-		D
			6,5x16	92	Image Colt L.Gun	45	54	18	1548,-		D
			7x16	17	BM Drive M.Gun	45	54	18	1476,-		D
			7x16	48	Image Motion	45	54	18	1468,-		D
			7x16	50	Image Legend	45	54	18	1544,-		D
			7,5x17	9	Nitro Sabre G.Blk	45	54	18	3052,-		D
			7,5x17	36	Image Colt	45	54	18	1956,-		D
			7,5x17	92	Image Colt L.Gun	45	54	18	1876,-		D
			8x18	7	Nitro Spark G.Blk/Grey	45	54	18	3476,-		C,D,M
			8x18	8	Nitro Spark G.Blk/Red	45	54	18	3476,-		C,D,M
			8x18	10	Nitro Demon H.Slv	47	54	14	2972,-		D,M
			8x18	11	Nitro Demon	47	54	14	2784,-		D,M
MERCEDES				PCD: **5-112** Bolt - Mutter: **14x1,50B**	CB: **66,6**						
A-Class (W169)	09.04-07.12	15-19	6,5x16	24	ATS Mizar	49	44	-10	1812,-	**OE-fit**	B,C,D
A200, A200CDI 16"			6,5x16	25	ATS Mizar G.Blk	49	44	-10	1880,-	**OE-fit**	B,C,D
A200 Turbo 16"			6,5x16	26	CSP 18 G.Blk/pol	46	44	-4	1896,-		D
B-Class (T245)	06.05-09.11	15-20	6,5x16	27	CSP 18	46	44	-4	1760,-		D
B180CDI, B200CDI 16"			6,5x16	28	CSP 18 G.Blk	46	44	-4	1760,-		D
B200, B200 Turbo 16"			6,5x16	36	Image Colt	45	44	-2	1624,-		D
			6,5x16	92	Image Colt L.Gun	45	44	-2	1548,-		D
			7x16	17	BM Drive M.Gun	45	44	-2	1476,-		D
			7x16	46	Image Stella	47	44	-6	1548,-		D
			7x16	47	Image Stella M.Blk	47	44	-6	1548,-		D
			7x16	48	Image Motion	45	44	-2	1468,-		D
			7x16	50	Image Legend	45	44	-2	1544,-		D
			7x17	24	ATS Mizar	48	44	-8	2268,-		D
			7x17	25	ATS Mizar G.Blk	48	44	-8	2340,-		D
			7,5x17	9	Nitro Sabre G.Blk	45	44	-2	3052,-		D
			7,5x17	16	Advanti Inizio DST	42	44	4	3324,-		D
			7,5x17	24	ATS Mizar	47	44	-6	2268,-	**OE-fit**	B,C,D
			7,5x17	25	ATS Mizar G.Blk	47	44	-6	2340,-	**OE-fit**	B,C,D
			7,5x17	36	Image Colt	45	44	-2	1956,-		D
			7,5x17	92	Image Colt L.Gun	45	44	-2	1876,-		D
			8x17	17	BM Drive M.Gun	45	44	-2	1736,-		D
			8x17	48	Image Motion	45	44	-2	1736,-		D
			7,5x18	2	Nitro Sapphire FF	48	44	-8	3944,-		D
			8x18	7	Nitro Spark G.Blk/Grey	45	44	-2	3476,-		C,D
			8x18	8	Nitro Spark G.Blk/Red	45	44	-2	3476,-		C,D
			8x18	9	Nitro Sabre G.Blk	45	44	-2	3496,-		D
			8x18	10	Nitro Demon H.Slv	47	44	-6	2972,-		D
			8x18	11	Nitro Demon	47	44	-6	2784,-		D
			8x18	16	Advanti Inizio DST	45	44	-2	3828,-		D
			8x18	17	BM Drive M.Gun	45	44	-2	2296,-		D
			8x18	26	CSP 18 G.Blk/pol	47	44	-6	2956,-		D
			8x18	27	CSP 18	47	44	-6	2972,-		D
			8x18	28	CSP 18 G.Blk	47	44	-6	2972,-		D
			8x18	36	Image Colt	45	44	-2	2412,-		D
			8x18	48	Image Motion	45	44	-2	2204,-		D
			8x18	92	Image Colt L.Gun	45	44	-2	2296,-		D
			7,5x19	2	Nitro Sapphire FF	48	44	-8	4572,-		D

Forts. neste side »

Bilmerke - Bilmodell	Årsmodell	Dimensjon	Felgdim.	Bilde	Felgmodell	ET Felg	ET Bil	Avvik ET	Veil. Pris eks. MVA	Merknader	B,C D, M
MERCEDES (forts.)			PCD: **5-112** Bolt - Mutter: **14x1,50B**			CB: **66,6**					
			8x19	10	Nitro Demon H.Slv	47	44	-6	3624,-		D
			8x19	11	Nitro Demon	47	44	-6	3376,-		D
			8x19	16	Advanti Inizio DST	45	44	-2	4412,-		D
			8x19	26	CSP 18 G.Blk/pol	47	44	-6	3596,-		D
			8x19	27	CSP 18	47	44	-6	3444,-		D
			8x19	28	CSP 18 G.Blk	47	44	-6	3444,-		D
			8x19	48	Image Motion	45	44	-2	2532,-		D
			8,5x19	9	Nitro Sabre G.Blk	45	44	-2	4292,-		D,M
			8,5x19	36	Image Colt	45	44	-2	3028,-	Kun B-Klass	D,M
			8,5x19	92	Image Colt L.Gun	45	44	-2	2876,-	Kun B-Klass	D,M
			8x20	2	Nitro Sapphire FF	48	44	-8	5096,-		D
			8,5x20	7	Nitro Spark G.Blk/Grey	45	44	-2	4660,-	Kun B-Klass	D,M
			8,5x20	8	Nitro Spark G.Blk/Red	45	44	-2	4660,-	Kun B-Klass	D,M
			8,5x20	9	Nitro Sabre G.Blk	45	44	-2	4800,-		D,M
			8,5x20	10	Nitro Demon H.Slv	45	44	-2	4104,-	Kun B-Klass	D,M
			8,5x20	11	Nitro Demon	45	44	-2	3808,-	Kun B-Klass	D,M
			8,5x20	36	Image Colt	45	44	-2	3432,-	Kun B-Klass	D,M
			8,5x20	92	Image Colt L.Gun	45	44	-2	3276,-	Kun B-Klass	M
MERCEDES			PCD: **5-112** Bolt - Mutter: **14x1,50B**			CB: **66,6**					
A-Class (W176)	08.12-04.18	15-20	6,5x16	24	ATS Mizar	49	49	0	1812,-	**OE-fit**	B,C,D
A200, A200CDI, A220CDI 16"			6,5x16	25	ATS Mizar G.Blk	49	49	0	1880,-	**OE-fit**	B,C,D
A250 17"			6,5x16	26	CSP 18 G.Blk/pol	46	49	6	1896,-		D
B-Class (W246)	10.11-11.18	15-20	6,5x16	27	CSP 18	46	49	6	1760,-		D
B200, B200CDI, B220CDI 16"			6,5x16	28	CSP 18 G.Blk	46	49	6	1760,-		D
B250 17"			6,5x16	36	Image Colt	45	49	8	1624,-		D
CLA (C117)	04.13-03.19	16-20	6,5x16	92	Image Colt L.Gun	45	49	8	1548,-		D
CLA220CDI, 250 17"			7x16	17	BM Drive M.Gun	45	49	8	1476,-		D
CLA (X117) shooting break	03.15-03.19	16-20	7x16	46	Image Stella	47	49	4	1548,-		D
CLA220CDI, 250 17"			7x16	47	Image Stella M.Blk	47	49	4	1548,-		D
			7x16	48	Image Motion	45	49	8	1468,-		D
			7x16	50	Image Legend	45	49	8	1544,-		D
			6,5x17	93	Image Star FF L.Gun	44	49	10	2216,-	**OE-fit**	B,C,D
			6,5x17	95	Image Star FF G.Blk/Pol	44	49	10	2336,-	**OE-fit**	B,C,D
			7x17	24	ATS Mizar	48	49	2	2268,-	**OE-fit**	B,C,D
			7x17	25	ATS Mizar G.Blk	48	49	2	2340,-	**OE-fit**	B,C,D
			7,5x17	9	Nitro Sabre G.Blk	45	49	8	3052,-		D
			7,5x17	16	Advanti Inizio DST	42	49	14	3324,-		D
			7,5x17	24	ATS Mizar	47	49	4	2268,-	**OE-fit**	B,C,D
			7,5x17	25	ATS Mizar G.Blk	47	49	4	2340,-	**OE-fit**	B,C,D
			7,5x17	36	Image Colt	45	49	8	1956,-		D
			7,5x17	92	Image Colt L.Gun	45	49	8	1876,-		D
			8x17	17	BM Drive M.Gun	45	49	8	1736,-		D
			8x17	48	Image Motion	45	49	8	1736,-		D
			7,5x18	2	Nitro Sapphire FF	48	49	2	3944,-		D
			7,5x18	93	Image Star FF L.Gun	49	49	0	2936,-	**OE-fit**	B,C,D
			7,5x18	95	Image Star FF G.Blk/Pol	49	49	0	3076,-	**OE-fit**	B,C,D
			8x18	7	Nitro Spark G.Blk/Grey	45	49	8	3476,-		C,D
			8x18	8	Nitro Spark G.Blk/Red	45	49	8	3476,-		C,D
			8x18	9	Nitro Sabre G.Blk	45	49	8	3496,-		D
			8x18	10	Nitro Demon H.Slv	47	49	4	2972,-		D
			8x18	11	Nitro Demon	47	49	4	2784,-		D
			8x18	16	Advanti Inizio DST	45	49	8	3828,-		D
			8x18	17	BM Drive M.Gun	45	49	8	2296,-		D
			8x18	24	ATS Mizar	48	49	2	3016,-	**OE-fit**	B,C,D
			8x18	25	ATS Mizar G.Blk	48	49	2	3116,-		B,C
			8x18	26	CSP 18 G.Blk/pol	47	49	4	2956,-		D
			8x18	27	CSP 18	47	49	4	2972,-		D
			8x18	28	CSP 18 G.Blk	47	49	4	2972,-		D
			8x18	36	Image Colt	45	49	8	2412,-		D
			8x18	48	Image Motion	45	49	8	2204,-		D
			8x18	92	Image Colt L.Gun	45	49	8	2296,-		D
			7,5x19	2	Nitro Sapphire FF	48	49	2	4572,-		D
			8x19	10	Nitro Demon H.Slv	47	49	4	3624,-		D
			8x19	11	Nitro Demon	47	49	4	3376,-		D
			8x19	16	Advanti Inizio DST	45	49	8	4412,-		D
			8x19	24	ATS Mizar	52	49	-6	3720,-	**OE-fit**	B,C,D
			8x19	25	ATS Mizar G.Blk	52	49	-6	3868,-	**OE-fit**	B,C,D
			8x19	26	CSP 18 G.Blk/pol	47	49	4	3596,-		D
			8x19	27	CSP 18	47	49	4	3444,-		D
			8x19	28	CSP 18 G.Blk	47	49	4	3444,-		D
			8x19	48	Image Motion	45	49	8	2532,-		D
			8,5x19	5	Nitro Volcano G.Gun	45	49	8	4388,-		D
			8,5x19	6	Nitro Volcano	45	49	8	4632,-		D
			8,5x19	9	Nitro Sabre G.Blk	45	49	8	4292,-		D,M
			8,5x19	36	Image Colt	45	49	8	3028,-		D,M
			8,5x19	92	Image Colt L.Gun	45	49	8	2876,-		D,M
			8x20	2	Nitro Sapphire FF	48	49	2	5096,-		D
			8,5x20	3	Nitro Turismo FF	43	49	12	4812,-		D,M
			8,5x20	4	Nitro Turismo FF G.Gun/Pol	43	49	12	4964,-		D,M
			8,5x20	5	Nitro Volcano G.Gun	45	49	8	4824,-		D,M
			8,5x20	6	Nitro Volcano	45	49	8	5164,-		D,M
			8,5x20	7	Nitro Spark G.Blk/Grey	45	49	8	4660,-		D,M
			8,5x20	8	Nitro Spark G.Blk/Red	45	49	8	4660,-		D,M
			8,5x20	9	Nitro Sabre G.Blk	45	49	8	4800,-		D,M
			8,5x20	10	Nitro Demon H.Slv	45	49	8	4104,-		D,M
			8,5x20	11	Nitro Demon	45	49	8	3808,-		D,M

Forts. neste side »

Bilmerke - Bilmodell	Årsmodell	Dimensjon	Felgdim.	Bilde	Felgmodell	ET Felg	ET Bil	Avvik ET	Veil. Pris eks. MVA	Merknader	B,C D, M
MERCEDES (forts.)				PCD: **5-112** Bolt - Mutter: **14x1,50B**		CB: **66,6**					
			8,5x20	36	Image Colt	45	49	8	3432,-		D,M
			8,5x20	92	Image Colt L.Gun	45	49	8	3276,-		M
MERCEDES				PCD: **5-112** Bolt - Mutter: **14x1,50B**		CB: **66,5**					
A-Class (W177)	05.18-	16-20	6,5x16	24	ATS Mizar	44	49	10	1812,-	**OE-fit**	B,C,D
A220, A250 17"			6,5x16	25	ATS Mizar G.Blk	44	49	10	1880,-	**OE-fit**	B,C,D
(Biler med AMG sportpakke 17")			6,5x16	36	Image Colt	45	49	8	1624,-		D
A-Class (V177) sedan	09.18-	16-20	6,5x16	92	Image Colt L.Gun	45	49	8	1548,-		D
A220, A250 17"			6,5x17	24	ATS Mizar	44	49	10	2268,-	**OE-fit**	B,C,D
(Biler med AMG sportpakke 17")			6,5x17	25	ATS Mizar G.Blk	44	49	10	2340,-	**OE-fit**	B,C,D
B-Class (W247)	12.18-	16-20	6,5x17	93	Image Star FF L.Gun	44	49	10	2216,-	**OE-fit**	B,C,D
B220, B220d, B250 17"			6,5x17	95	Image Star FF G.Blk/Pol	44	49	10	2336,-	**OE-fit**	B,C,D
(Biler med AMG sportpakke 18")			7x17	24	ATS Mizar	48	49	2	2268,-	**OE-fit**	B,C,D
CLA (C118)	04.19-	16-20	7x17	25	ATS Mizar G.Blk	48	49	2	2340,-	**OE-fit**	B,C,D
CLA220CDI, CLA250 17"			7,5x17	9	Nitro Sabre G.Blk	45	49	8	3052,-		D
(Biler med AMG sportpakke 18")			7,5x17	16	Advanti Inizio DST	42	49	14	3324,-		D
CLA (X118) shooting break	05.19-	16-20	7,5x17	24	ATS Mizar	47	49	4	2268,-	**OE-fit**	B,C,D
CLA220d, CLA250 17"			7,5x17	25	ATS Mizar G.Blk	47	49	4	2340,-	**OE-fit**	B,C,D
(Biler med AMG sportpakke 18")			7,5x17	36	Image Colt	45	49	8	1956,-		D
			7,5x17	50	Image Legend	47	49	4	1812,-		D
			7,5x17	92	Image Colt L.Gun	45	49	8	1876,-		D
			8x17	17	BM Drive M.Gun	45	49	8	1736,-		D
			8x17	48	Image Motion	45	49	8	1736,-		D
			7,5x18	2	Nitro Sapphire FF	48	49	2	3944,-		D
			7,5x18	93	Image Star FF L.Gun	49	49	0	2936,-	**OE-fit**	B,C,D
			7,5x18	95	Image Star FF G.Blk/Pol	49	49	0	3076,-	**OE-fit**	B,C,D
			8x18	7	Nitro Spark G.Blk/Grey	45	49	8	3476,-		C,D
			8x18	8	Nitro Spark G.Blk/Red	45	49	8	3476,-		C,D
			8x18	9	Nitro Sabre G.Blk	45	49	8	3496,-		D
			8x18	10	Nitro Demon H.Slv	47	49	4	2972,-		D
			8x18	11	Nitro Demon	47	49	4	2784,-		D
			8x18	16	Advanti Inizio DST	45	49	8	3828,-		D
			8x18	17	BM Drive M.Gun	45	49	8	2296,-		D
			8x18	24	ATS Mizar	48	49	2	3016,-	**OE-fit**	B,C,D
			8x18	25	ATS Mizar G.Blk	48	49	2	3116,-	**OE-fit**	B,C,D
			8x18	26	CSP 18 G.Blk/pol	47	49	4	2956,-		D
			8x18	27	CSP 18	47	49	4	2972,-		D
			8x18	28	CSP 18 G.Blk	47	49	4	2972,-		D
			8x18	36	Image Colt	45	49	8	2412,-		D
			8x18	48	Image Motion	45	49	8	2204,-		D
			8x18	50	Image Legend	47	49	4	2276,-		D
			8x18	92	Image Colt L.Gun	45	49	8	2296,-		D
			7,5x19	2	Nitro Sapphire FF	48	49	2	4572,-		D
			8x19	10	Nitro Demon H.Slv	47	49	4	3624,-		D
			8x19	11	Nitro Demon	47	49	4	3376,-		D
			8x19	16	Advanti Inizio DST	45	49	8	4412,-		D
			8x19	24	ATS Mizar	48	49	2	3720,-	**OE-fit**	B,C,D
			8x19	25	ATS Mizar G.Blk	48	49	2	3868,-	**OE-fit**	B,C,D
			8x19	26	CSP 18 G.Blk/pol	47	49	4	3596,-		D
			8x19	27	CSP 18	47	49	4	3444,-		D
			8x19	28	CSP 18 G.Blk	47	49	4	3444,-		D
			8x19	48	Image Motion	45	49	8	2532,-		D
			8,5x19	5	Nitro Volcano G.Gun	45	49	8	4388,-		D,M
			8,5x19	6	Nitro Volcano	45	49	8	4632,-		D,M
			8,5x19	9	Nitro Sabre G.Blk	45	49	8	4292,-		D,M
			8,5x19	36	Image Colt	45	49	8	3028,-		D,M
			8,5x19	92	Image Colt L.Gun	45	49	8	2876,-		D,M
			8x20	2	Nitro Sapphire FF	48	49	2	5096,-		D
			8,5x20	5	Nitro Volcano G.Gun	45	49	8	4824,-		D,M
			8,5x20	6	Nitro Volcano	45	49	8	5164,-		D,M
			8,5x20	7	Nitro Spark G.Blk/Grey	45	49	8	4660,-		D,M
			8,5x20	8	Nitro Spark G.Blk/Red	45	49	8	4660,-		D,M
			8,5x20	9	Nitro Sabre G.Blk	45	49	8	4800,-		D,M
			8,5x20	10	Nitro Demon H.Slv	45	49	8	4104,-		D,M
			8,5x20	11	Nitro Demon	45	49	8	3808,-		D,M
			8,5x20	36	Image Colt	45	49	8	3432,-		D,M
			8,5x20	92	Image Colt L.Gun	45	49	8	3276,-		D,M
MERCEDES				PCD: **5-112** Bolt - Mutter: **14x1,50B**		CB: **66,5**					
A-Class (W177) 35 AMG	11.18-	18-20	8x18	7	Nitro Spark G.Blk/Grey	35	40	10	3476,-		C,D
			8x18	10	Nitro Demon H.Slv	40	40	0	2972,-		D
			8x18	11	Nitro Demon	40	40	0	2784,-		D
			8x18	17	BM Drive M.Gun	35	40	10	2296,-		D
			8x18	24	ATS Mizar	38	40	4	3016,-		C,D
			8x18	25	ATS Mizar G.Blk	38	40	4	3116,-		C,D
			8x18	46	Image Stella	35	40	10	2276,-		D
			8x18	47	Image Stella M.Blk	35	40	10	2276,-		D
			8x18	48	Image Motion	35	40	10	2204,-		D
			8x18	49	Image Motion G.Gun	35	40	10	2204,-		D
			8x18	50	Image Legend	35	40	10	2276,-		D
			8x19	10	Nitro Demon H.Slv	40	40	0	3624,-		D
			8x19	24	ATS Mizar	38	40	4	3720,-		C,D
			8x19	25	ATS Mizar G.Blk	38	40	4	3868,-		C,D
			8x19	48	Image Motion	35	40	10	2532,-		D
			8x19	49	Image Motion G.Gun	35	40	10	2532,-		D
			8,5x20	3	Nitro Turismo FF	43	40	-6	4812,-		D,M
			8,5x20	4	Nitro Turismo FF G.Gun/Pol	43	40	-6	4964,-		D,M
			8,5x20	10	Nitro Demon H.Slv	38	40	4	4104,-		D,M

Forts. neste side »

Bilmerke - Bilmodell	Årsmodell	Dimensjon	Felgdim.	Bilde	Felgmodell	ET Felg	ET Bil	Avvik ET	Veil. Pris eks. MVA	Merknader	B,C D, M
MERCEDES (forts.)			PCD: **5-112** Bolt - Mutter: **14x1,50B** CB: **66,5**								
			8,5x20	11	Nitro Demon	38	40	4	3808,-		D,M
			8,5x20	24	ATS Mizar	40	40	0	5948,-		C,D,M
			8,5x20	25	ATS Mizar G.Blk	40	40	0	6020,-		C,D,M
MERCEDES			PCD: **5-112** Bolt - Mutter: **14x1,50B** CB: **66,5**								
A-Class (W177) 45 AMG	09.19-	18-20	8,5x19	9	Nitro Sabre G.Blk	45	46	2	4292,-		D
			8,5x20	3	Nitro Turismo FF	43	46	6	4812,-		D
			8,5x20	4	Nitro Turismo FF G.Gun/Pol	43	46	6	4964,-		D
			8,5x20	9	Nitro Sabre G.Blk	45	46	2	4800,-		D
MERCEDES			PCD: **5-112** Bolt - Mutter: **14x1,50B** CB: **66,5**								
CLA (C118) 35 AMG	10.19-	18-20	8x18	9	Nitro Sabre G.Blk	45	55	20	3496,-		D
			8x18	16	Advanti Inizio DST	45	55	20	3828,-		D
			8x18	24	ATS Mizar	48	55	14	3016,-		C,D
			8x18	25	ATS Mizar G.Blk	48	55	14	3116,-		C,D
			8x18	26	CSP 18 G.Blk/pol	47	55	16	2956,-		D
			8x18	27	CSP 18	47	55	16	2972,-		D
			8x18	28	CSP 18 G.Blk	47	55	16	2972,-		D
			8x18	36	Image Colt	45	55	20	2412,-		D
			8x18	48	Image Motion	45	55	20	2204,-		D
			8x18	92	Image Colt L.Gun	45	55	20	2296,-		D
			8x19	4	Nitro Turismo FF G.Gun/Pol	47	55	16	4644,-		D
			8x19	16	Advanti Inizio DST	45	55	20	4412,-		D
			8x19	24	ATS Mizar	48	55	14	3720,-		C,D
			8x19	25	ATS Mizar G.Blk	48	55	14	3868,-		C,D
			8x19	26	CSP 18 G.Blk/pol	47	55	16	3596,-		D
			8x19	27	CSP 18	47	55	16	3444,-		D
			8x19	28	CSP 18 G.Blk	47	55	16	3444,-		D
			8x19	48	Image Motion	45	55	20	2532,-		D
			8,5x19	9	Nitro Sabre G.Blk	45	55	20	4292,-		D
			8x20	4	Nitro Turismo FF G.Gun/Pol	47	55	16	4964,-		D
			8,5x20	9	Nitro Sabre G.Blk	45	55	20	4800,-		D
			8,5x20	36	Image Colt	45	55	20	3432,-		D
MERCEDES			PCD: **5-112** Bolt - Mutter: **14x1,50B** CB: **66,5**								
CLA (C118) 45 AMG	10.19-	18-20	8,5x19	36	Image Colt	45	52	14	3028,-		D
			8,5x19	92	Image Colt L.Gun	45	52	14	2876,-		D
			9x19	3	Nitro Turismo FF	45	52	14	4660,-		D
			9x19	4	Nitro Turismo FF G.Gun/Pol	45	52	14	4812,-		D
			8,5x20	9	Nitro Sabre G.Blk	45	52	14	4800,-		D
			8,5x20	36	Image Colt	45	52	14	3432,-		D
			8,5x20	92	Image Colt L.Gun	45	52	14	3276,-		D
MERCEDES			PCD: **5-112** Bolt - Mutter: **14x1,50B** CB: **66,6**								
A-Class (W176) 45 AMG	04.13-12.18	18-20	8x18	17	BM Drive M.Gun	45	48	6	2296,-		D
CLA (C117) 45 AMG	07.13-03.19	18-20	8x19	24	ATS Mizar	48	48	0	3720,-	**OE-fit**	B,C,D
CLA (X117) 45 AMG shoting break	03.15-03.19	18-20	8x19	25	ATS Mizar G.Blk	48	48	0	3868,-	**OE-fit**	B,C,D
S 19"			8,5x20	3	Nitro Turismo FF	43	48	10	4812,-		D,M
			8,5x20	4	Nitro Turismo FF G.Gun/Pol	43	48	10	4964,-		D,M
MERCEDES			PCD: **5-112** Bolt - Mutter: **14x1,50B** CB: **66,5**								
GLA (W245G)	12.13-03.20	17-22	7x17	24	ATS Mizar	48	46	-4	2268,-	**OE-fit**	B,C,D
(Biler med AMG sportpakke 18")			7x17	25	ATS Mizar G.Blk	48	46	-4	2340,-	**OE-fit**	B,C,D
			7,5x17	9	Nitro Sabre G.Blk	45	46	2	3052,-		D
			7,5x17	16	Advanti Inizio DST	42	46	8	3324,-		D
			7,5x17	24	ATS Mizar	47	46	-2	2268,-	**OE-fit**	B,C,D
			7,5x17	25	ATS Mizar G.Blk	47	46	-2	2340,-	**OE-fit**	B,C,D
			7,5x17	36	Image Colt	45	46	2	1956,-		D
			7,5x17	92	Image Colt L.Gun	45	46	2	1876,-		D
			7,5x17	93	Image Star FF L.Gun	40	46	12	2216,-		C,D
			7,5x17	95	Image Star FF G.Blk/Pol	40	46	12	2336,-		C,D
			8x17	17	BM Drive M.Gun	45	46	2	1736,-		D
			8x17	48	Image Motion	45	46	2	1736,-		D
			8x18	2	Nitro Sapphire FF	39	46	14	4036,-		D
			8x18	7	Nitro Spark G.Blk/Grey	45	46	2	3476,-		C,D
			8x18	8	Nitro Spark G.Blk/Red	45	46	2	3476,-		C,D
			8x18	9	Nitro Sabre G.Blk	45	46	2	3496,-		D
			8x18	10	Nitro Demon H.Slv	47	46	-2	2972,-		D
			8x18	11	Nitro Demon	47	46	-2	2784,-		D
			8x18	16	Advanti Inizio DST	45	46	2	3828,-		D
			8x18	17	BM Drive M.Gun	45	46	2	2296,-		D
			8x18	36	Image Colt	45	46	2	2412,-		D
			8x18	48	Image Motion	45	46	2	2204,-		D
			8x18	92	Image Colt L.Gun	45	46	2	2296,-		D
			8x18	93	Image Star FF L.Gun	43	46	6	2936,-		C,D
			8x18	94	Image Star FF Slv	43	46	6	2936,-		C,D
			8x18	95	Image Star FF G.Blk/Pol	43	46	6	3076,-		C,D
			8x19	2	Nitro Sapphire FF	39	46	14	4684,-		D
			8x19	10	Nitro Demon H.Slv	47	46	-2	3624,-		D
			8x19	11	Nitro Demon	47	46	-2	3376,-		D
			8x19	16	Advanti Inizio DST	45	46	2	4412,-		D
			8x19	48	Image Motion	45	46	2	2532,-		D
			8,5x19	2	Nitro Sapphire FF	40	46	12	4684,-		D
			8,5x19	5	Nitro Volcano G.Gun	45	46	2	4388,-		D
			8,5x19	6	Nitro Volcano	45	46	2	4632,-		D
			8,5x19	9	Nitro Sabre G.Blk	45	46	2	4292,-		D
			8,5x20	2	Nitro Sapphire FF	40	46	12	5216,-		D
			8,5x20	3	Nitro Turismo FF	43	46	6	4812,-		D
			8,5x20	4	Nitro Turismo FF G.Gun/Pol	43	46	6	4964,-		D
			8,5x20	5	Nitro Volcano G.Gun	45	46	2	4824,-		D

Forts. neste side »

Bilmerke - Bilmodell	Årsmodell	Dimensjon	Felgdim.	Bilde	Felgmodell	ET Felg	ET Bil	Avvik ET	Veil. Pris eks. MVA	Merknader	B,C D, M
MERCEDES (forts.)				PCD: **5-112** Bolt - Mutter: **14x1,50B**		CB: **66,5**					
			8,5x20	6	Nitro Volcano	45	46	2	5164,-		D
			8,5x20	7	Nitro Spark G.Blk/Grey	45	46	2	4660,-		D
			8,5x20	8	Nitro Spark G.Blk/Red	45	46	2	4660,-		D
			8,5x20	9	Nitro Sabre G.Blk	45	46	2	4800,-		D
			8,5x20	10	Nitro Demon H.Slv	45	46	2	4104,-		D
			8,5x20	11	Nitro Demon	45	46	2	3808,-		D
			8,5x20	24	ATS Mizar	40	46	12	5948,-		C,D
			8,5x20	25	ATS Mizar G.Blk	40	46	12	6020,-		C,D
			9x21	5	Nitro Volcano G.Gun	40	46	12	5540,-		D,M
			9x21	6	Nitro Volcano	40	46	12	5996,-		D,M
			9x21	24	ATS Mizar	37	46	18	8276,-		C,D,M
			9x21	25	ATS Mizar G.Blk	37	46	18	8352,-		C,D,M
			9x22	12	Nitro Edge M.Blk	40	46	12	4888,-		D,M
MERCEDES				PCD: **5-112** Bolt - Mutter: **14x1,50B**		CB: **66,5**					
GLA (W245G) 45 AMG	10.14-03.20	18-22	8x18	17	BM Drive M.Gun	45	43	-4	2296,-		D
			8x19	24	ATS Mizar	43	43	0	3720,-		C,D
			8x19	25	ATS Mizar G.Blk	43	43	0	3868,-		C,D
			8,5x20	3	Nitro Turismo FF	43	43	0	4812,-		D,M
			8,5x20	4	Nitro Turismo FF G.Gun/Pol	43	43	0	4964,-		D,M
			8,5x20	24	ATS Mizar	40	43	6	5948,-		C,D
			8,5x20	25	ATS Mizar G.Blk	40	43	6	6020,-		C,D
			9x21	24	ATS Mizar	37	43	12	8276,-		C,D,M
			9x21	25	ATS Mizar G.Blk	37	43	12	8352,-		C,D,M
MERCEDES				PCD: **5-112** Bolt - Mutter: **14x1,50B**		CB: **66,5**					
GLA (H247)	04.20-	17-21	6,5x17	24	ATS Mizar	44	48	8	2268,-	**OE-fit**	B,C,D
(Biler med AMG sportpakke 18")			6,5x17	25	ATS Mizar G.Blk	44	48	8	2340,-	**OE-fit**	B,C,D
GLB (X247)	08.19-	17-21	6,5x17	93	Image Star FF L.Gun	44	48	8	2216,-	**OE-fit**	B,C,D
(Biler med AMG sportpakke 18")			6,5x17	95	Image Star FF G.Blk/Pol	44	48	8	2336,-	**OE-fit**	B,C,D
			7x17	48	Image Motion	47	48	2	1736,-		D
			7x17	49	Image Motion G.Gun	47	48	2	1736,-		D
			7,5x17	9	Nitro Sabre G.Blk	45	48	6	3052,-		D
			7,5x17	24	ATS Mizar	47	48	2	2268,-	**OE-fit**	B,C,D
			7,5x17	25	ATS Mizar G.Blk	47	48	2	2340,-	**OE-fit**	B,C,D
			7,5x17	36	Image Colt	45	48	6	1956,-		D
			7,5x17	50	Image Legend	47	48	2	1812,-		D
			7,5x17	92	Image Colt L.Gun	45	48	6	1876,-		D
			7,5x18	93	Image Star FF L.Gun	49	48	-2	2936,-	**OE-fit**	B,C,D
			7,5x18	95	Image Star FF G.Blk/Pol	49	48	-2	3076,-	**OE-fit**	B,C,D
			8x18	10	Nitro Demon H.Slv	47	48	2	2972,-		D
			8x18	11	Nitro Demon	47	48	2	2784,-		D
			8x18	17	BM Drive M.Gun	45	48	6	2296,-		D
			8x18	24	ATS Mizar	48	48	0	3016,-	**OE-fit**	B,C,D
			8x18	25	ATS Mizar G.Blk	48	48	0	3116,-	**OE-fit**	B,C,D
			8x18	26	CSP 18 G.Blk/pol	47	48	2	2956,-		D
			8x18	27	CSP 18	47	48	2	2972,-		D
			8x18	28	CSP 18 G.Blk	47	48	2	2972,-		D
			8x18	36	Image Colt	45	48	6	2412,-		D
			8x18	48	Image Motion	45	48	6	2204,-		D
			8x18	50	Image Legend	47	48	2	2276,-		D
			8x18	92	Image Colt L.Gun	45	48	6	2296,-		D
			8x19	4	Nitro Turismo FF G.Gun/Pol	47	48	2	4644,-		D
			8x19	10	Nitro Demon H.Slv	47	48	2	3624,-		D
			8x19	11	Nitro Demon	47	48	2	3376,-		D
			8x19	24	ATS Mizar	48	48	0	3720,-	**OE-fit**	B,C,D
			8x19	25	ATS Mizar G.Blk	48	48	0	3868,-	**OE-fit**	B,C,D
			8x19	26	CSP 18 G.Blk/pol	47	48	2	3596,-		D
			8x19	27	CSP 18	47	48	2	3444,-		D
			8x19	28	CSP 18 G.Blk	47	48	2	3444,-		D
			8x19	48	Image Motion	45	48	6	2532,-		D
			8,5x19	5	Nitro Volcano G.Gun	45	48	6	4388,-		D
			8,5x19	6	Nitro Volcano	45	48	6	4632,-		D
			8,5x19	9	Nitro Sabre G.Blk	45	48	6	4292,-		D
			8,5x19	36	Image Colt	45	48	6	3028,-		D
			8,5x19	92	Image Colt L.Gun	45	48	6	2876,-		D
			8x20	2	Nitro Sapphire FF	48	48	0	5096,-		D
			8x20	4	Nitro Turismo FF G.Gun/Pol	47	48	2	4964,-		D
			8,5x20	5	Nitro Volcano G.Gun	45	48	6	4824,-		D
			8,5x20	6	Nitro Volcano	45	48	6	5164,-		D
			8,5x20	7	Nitro Spark G.Blk/Grey	45	48	6	4660,-		D
			8,5x20	8	Nitro Spark G.Blk/Red	45	48	6	4660,-		D
			8,5x20	9	Nitro Sabre G.Blk	45	48	6	4800,-		D
			8,5x20	36	Image Colt	45	48	6	3432,-		D
			8,5x20	92	Image Colt L.Gun	45	48	6	3276,-		D
MERCEDES				PCD: **5-112** Bolt - Mutter: **12x1,50B**		CB: **66,6**					
Vaneo (W414)	02.02-06.06	15-18	6,5x16	24	ATS Mizar	38	42	8	1812,-		C,D
			6,5x16	25	ATS Mizar G.Blk	38	42	8	1880,-		C,D
			6,5x16	36	Image Colt	35	42	14	1624,-		D
			6,5x16	92	Image Colt L.Gun	35	42	14	1548,-		D
			7x16	50	Image Legend	35	42	14	1544,-		D
			7,5x17	36	Image Colt	35	42	14	1956,-		D
			7,5x17	92	Image Colt L.Gun	35	42	14	1876,-		D

Bilmerke - Bilmodell	Årsmodell	Dimensjon	Felgdim.	Bilde	Felgmodell	ET Felg	ET Bil	Avvik ET	Veil. Pris eks. MVA	Merknader	B,C D, M
MERCEDES				PCD: **5-112** Bolt - Mutter: **12x1,50B**		CB: **66,6**					
SLK (R171)	03.04-02.11	16-20	7x16	40	Image Spirit	35	37	4	1264,-		D
Biler med sportpkt & SLK350 17"			7x16	50	Image Legend	35	37	4	1544,-		D
SLK55 AMG 18"			7,5x17	36	Image Colt	35	37	4	1956,-		D
			7,5x17	46	Image Stella	35	37	4	1812,-		D
			7,5x17	47	Image Stella M.Blk	35	37	4	1812,-		D
			7,5x17	50	Image Legend	35	37	4	1812,-		D
			7,5x17	92	Image Colt L.Gun	35	37	4	1876,-		D
			8x17	9	Nitro Sabre G.Blk	35	37	4	3108,-		D
			8x17	40	Image Spirit	35	37	4	1476,-		D
			8x18	7	Nitro Spark G.Blk/Grey	35	37	4	3476,-		C,D
			8x18	9	Nitro Sabre G.Blk	35	37	4	3496,-		D
			8x18	36	Image Colt	35	37	4	2412,-		D
			8x18	40	Image Spirit	35	37	4	1912,-		D
			8x18	46	Image Stella	35	37	4	2276,-		D
			8x18	47	Image Stella M.Blk	35	37	4	2276,-		
			8x18	50	Image Legend	35	37	4	2276,-		D
			8x18	92	Image Colt L.Gun	35	37	4	2296,-		D
			8,5x19	9	Nitro Sabre G.Blk	35	37	4	4292,-		D
			8,5x19	36	Image Colt	35	37	4	3028,-		D
			8,5x19	92	Image Colt L.Gun	35	37	4	2876,-		D
			8,5x20	9	Nitro Sabre G.Blk	35	37	4	4800,-		D
			8,5x20	36	Image Colt	35	37	4	3432,-		D
			8,5x20	92	Image Colt L.Gun	35	37	4	3276,-		
MERCEDES				PCD: **5-112** Bolt - Mutter: **14x1,50B**		CB: **66,5**					
SLC (R172)	02.16-	16-20	7x16	50	Image Legend	35	42	14	1544,-		D
SLC300 17"			7,5x17	36	Image Colt	35	42	14	1956,-		D
(Biler med AMG sportpakke 17")			7,5x17	46	Image Stella	35	42	14	1812,-		D
SLK (R172)	03.11-01.16	16-20	7,5x17	47	Image Stella M.Blk	35	42	14	1812,-		D
SLK250, SLK350 17"			7,5x17	50	Image Legend	35	42	14	1812,-		D
(Biler med AMG sportpakke 17")			7,5x17	92	Image Colt L.Gun	35	42	14	1876,-		D
			8x17	9	Nitro Sabre G.Blk	35	42	14	3108,-		D
			8x18	7	Nitro Spark G.Blk/Grey	35	42	14	3476,-		C,D
			8x18	9	Nitro Sabre G.Blk	35	42	14	3496,-		D
			8x18	10	Nitro Demon H.Slv	35	42	14	2972,-		D
			8x18	11	Nitro Demon	35	42	14	2784,-		D
			8x18	36	Image Colt	35	42	14	2412,-		D
			8x18	46	Image Stella	35	42	14	2276,-		D
			8x18	47	Image Stella M.Blk	35	42	14	2276,-		D
			8x18	50	Image Legend	35	42	14	2276,-		D
			8x18	92	Image Colt L.Gun	35	42	14	2296,-		D
			8,5x18	24	ATS Mizar	34	42	16	3016,-	**OE-fit**	B,C,D
			8,5x18	25	ATS Mizar G.Blk	34	42	16	3116,-	**OE-fit**	B,C,D
			8x19	10	Nitro Demon H.Slv	35	42	14	3624,-		D
			8x19	11	Nitro Demon	35	42	14	3376,-		D
			8,5x19	3	Nitro Turismo FF	35	42	14	4492,-		D
			8,5x19	4	Nitro Turismo FF G.Gun/Pol	35	42	14	4644,-		D
			8,5x19	9	Nitro Sabre G.Blk	35	42	14	4292,-		D
			8,5x19	24	ATS Mizar	34	42	16	4176,-	**OE-fit**	B,C,D
			8,5x19	25	ATS Mizar G.Blk	34	42	16	4116,-	**OE-fit**	B,C,D
			8,5x19	36	Image Colt	35	42	14	3028,-		D
			8,5x19	92	Image Colt L.Gun	35	42	14	2876,-		D
			9,5x19	3	Nitro Turismo FF	40	36	-8	4660,-	Kun bak	D
			9,5x19	4	Nitro Turismo FF G.Gun/Pol	40	36	-8	4812,-	Kun bak	D
			8,5x20	7	Nitro Spark G.Blk/Grey	35	42	14	4660,-		D
			8,5x20	9	Nitro Sabre G.Blk	35	42	14	4800,-		D
			8,5x20	10	Nitro Demon H.Slv	38	42	8	4104,-		D
			8,5x20	11	Nitro Demon	38	42	8	3808,-		D
			8,5x20	36	Image Colt	35	42	14	3432,-		D
			8,5x20	92	Image Colt L.Gun	35	42	14	3276,-		D
MERCEDES				PCD: **5-112** Bolt - Mutter: **14x1,50B**		CB: **66,5**					
SLC (R172) 43 AMG	02.16-	18-20	8,5x19	3	Nitro Turismo FF	35	43	16	4492,-		D
SLK (R172) SLK55 AMG	02.12-01.16	18-20	8,5x19	4	Nitro Turismo FF G.Gun/Pol	35	43	16	4644,-		D
			9,5x19	3	Nitro Turismo FF	40	42	4	4660,-	Kun bak	D
			9,5x19	4	Nitro Turismo FF G.Gun/Pol	40	42	4	4812,-	Kun bak	D
MERCEDES				PCD: **5-112** Bolt - Mutter: **12x1,50B**		CB: **66,6**					
C-Class (W202)	06.93-04.00	15-20	7x16	17	BM Drive M.Gun	35	37	4	1476,-		D
C-Class (W202) t-modell	05.96-02.01	15-20	7x16	40	Image Spirit	35	37	4	1264,-		D
C-Class (W203)	05.00-03.04	15-20	7x16	48	Image Motion	35	37	4	1468,-		D
C230K, C240, C270CDI 16"			7x16	50	Image Legend	35	37	4	1544,-		D
C280, C320 16"			7,5x17	46	Image Stella	35	37	4	1812,-		D
C-Class (W203) Facelift	04.04-03.07	16-20	7,5x17	47	Image Stella M.Blk	35	37	4	1812,-		D
C320CDI, C350 17"			7,5x17	50	Image Legend	35	37	4	1812,-		D
C-Class (W203) t-modell	05.00-03.04	15-20	8x17	9	Nitro Sabre G.Blk	35	37	4	3108,-		D
C230K, C240, C270CDI 16"			8x17	17	BM Drive M.Gun	35	37	4	1736,-		D
C280, C320 16"			8x17	40	Image Spirit	35	37	4	1476,-		D
CLC-Class (CL203)	03.08-02.11	16-20	8x18	9	Nitro Sabre G.Blk	35	37	4	3496,-		D
CLC350 17"			8x18	17	BM Drive M.Gun	35	37	4	2296,-		D
CLK (W208)	06.97-05.02	15-20	8x18	40	Image Spirit	35	37	4	1912,-		D
CLK320 16"			8x18	46	Image Stella	35	37	4	2276,-		D
CLK (W209)	06.02-02.09	16-20	8x18	47	Image Stella M.Blk	35	37	4	2276,-		
CLK320CDI, CLK350 17"											
(Biler med sportpakke 17")											
E-Class (W210)	06.95-02.02	15-20									
270CDI, 280, 300TD 16"											
320, 320CDI 16"											

Forts. neste side »

Bilmerke - Bilmodell	Årsmodell	Dimensjon	Felgdim.	Bilde	Felgmodell	ET Felg	ET Bil	Avvik ET	Veil. Pris eks. MVA	Merknader	B,C D, M
MERCEDES (forts.)				PCD: **5-112** Bolt - Mutter: **12x1,50B** CB: **66,6**							
E-Class (W210) t-modell	06.95-02.02	15-20									
270CDI, 280, 300TD 16"											
320, 320CDI 16"											
SLK (R170)	09.96-02.04	15-19									
SLK230K 16"											
SLK320 16"											
MERCEDES				PCD: **5-112** Bolt - Mutter: **12x1,50B** CB: **66,6**							
C-Class (W202) C36 AMG	95-98	16-19	7,5x17	46	Image Stella	35	37	4	1812,-		D
C-Class (W202) C43 AMG	98-00	17-19	7,5x17	47	Image Stella M.Blk	35	37	4	1812,-		D
C-Class (W203) C30CDI AMG	04.00-12.04	17-20	8x17	9	Nitro Sabre G.Blk	35	37	4	3108,-		D
C-Class (W203) C32 AMG	04.00-05.06	17-20	8x18	9	Nitro Sabre G.Blk	35	37	4	3496,-		D
C-Class (W203) C55 AMG	05.06-03.07	18-20	8x18	46	Image Stella	35	37	4	2276,-		D
CLK (W208) CLK430	06.97-06.02	17-20	8x18	47	Image Stella M.Blk	35	37	4	2276,-		
CLK (W208) CLK55 AMG	06.97-06.02	17-20									
CLK (W209) CLK500	07.02-02.09	17-20									
CLK (W209) CLK55 AMG	07.02-08.06	18-20									
CLK (W209) CLK63 AMG	08.06-02.09	18-20									
E-Class (W124) 420E, 500E	91-95	16-20									
E-Class (W210) E420	05.96-04.03	16-20									
E430 17"											
E-Class (W210) E50 AMG	05.96-04.03	17-20									
E55 AMG 17"											
SLK (R170) SLK32 AMG 17"	09.96-04.04	17-19									
MERCEDES				PCD: **5-112** Bolt - Mutter: **12x1,50B** CB: **66,6**							
C-Class (W203)	03-04	17-19	7,5x17	46	Image Stella	35	37	4	1812,-		D
(sportpakke)			7,5x17	47	Image Stella M.Blk	35	37	4	1812,-		D
			8x17	9	Nitro Sabre G.Blk	35	37	4	3108,-		D
			8x18	9	Nitro Sabre G.Blk	35	37	4	3496,-		D
			8x18	46	Image Stella	35	37	4	2276,-		D
			8x18	47	Image Stella M.Blk	35	37	4	2276,-		
MERCEDES				PCD: **5-112** Bolt - Mutter: **14x1,50B** CB: **66,6**							
C-Class (C204) coupe	03.11-09.15	16-20	6,5x16	24	ATS Mizar	38	47	18	1812,-	**OE-fit**	B,C,D
C350 17"			6,5x16	25	ATS Mizar G.Blk	38	47	18	1880,-	**OE-fit**	B,C,D
(Biler med AMG sportpakke 17")			6,5x16	36	Image Colt	35	47	24	1624,-		D
C-Class (W204) sedan	03.07-11.13	16-20	6,5x16	92	Image Colt L.Gun	35	47	24	1548,-		D
C320CDI, C350 17"			7x16	17	BM Drive M.Gun	45	47	4	1476,-		D
(Biler med AMG sportpakke 17")			7x16	48	Image Motion	45	47	4	1468,-		D
C-Class (W204) t-modell	10.07-08.14	16-20	7x16	50	Image Legend	45	47	4	1544,-		D
C320CDI, C350 17"			7x17	24	ATS Mizar	48	47	-2	2268,-	**OE-fit**	B,C,D
(Biler med AMG sportpakke 17")			7x17	25	ATS Mizar G.Blk	48	47	-2	2340,-	**OE-fit**	B,C,D
			7x17	93	Image Star FF L.Gun	48	47	-2	2216,-	**OE-fit**	B,C,D
			7x17	95	Image Star FF G.Blk/Pol	48	47	-2	2336,-	**OE-fit**	B,C,D
			7,5x17	9	Nitro Sabre G.Blk	45	47	4	3052,-		D
			7,5x17	16	Advanti Inizio DST	42	47	10	3324,-		D
			7,5x17	24	ATS Mizar	47	47	0	2268,-	**OE-fit**	B,C,D
			7,5x17	25	ATS Mizar G.Blk	47	47	0	2340,-	**OE-fit**	B,C,D
			7,5x17	36	Image Colt	45	47	4	1956,-		D
			7,5x17	92	Image Colt L.Gun	45	47	4	1876,-		D
			8x17	17	BM Drive M.Gun	45	47	4	1736,-		D
			8x17	24	ATS Mizar	48	47	-2	2268,-	**OE-fit**	B,C,D
			8x17	25	ATS Mizar G.Blk	48	47	-2	2340,-	**OE-fit**	B,C,D
			8x17	48	Image Motion	45	47	4	1736,-		D
			7,5x18	2	Nitro Sapphire FF	48	47	-2	3944,-		D
			7,5x18	93	Image Star FF L.Gun	44	47	6	2936,-	**OE-fit**	B,C,D
			7,5x18	94	Image Star FF Slv	44	47	6	2936,-	**OE-fit**	B,C,D
			7,5x18	95	Image Star FF G.Blk/Pol	44	47	6	3076,-	**OE-fit**	B,C,D
			8x18	7	Nitro Spark G.Blk/Grey	45	47	4	3476,-		C,D
			8x18	8	Nitro Spark G.Blk/Red	45	47	4	3476,-		C,D
			8x18	9	Nitro Sabre G.Blk	45	47	4	3496,-		D
			8x18	10	Nitro Demon H.Slv	47	47	0	2972,-		D
			8x18	11	Nitro Demon	47	47	0	2784,-		D
			8x18	16	Advanti Inizio DST	45	47	4	3828,-		D
			8x18	17	BM Drive M.Gun	45	47	4	2296,-		D
			8x18	26	CSP 18 G.Blk/pol	47	47	0	2956,-		D
			8x18	27	CSP 18	47	47	0	2972,-		D
			8x18	28	CSP 18 G.Blk	47	47	0	2972,-		D
			8x18	36	Image Colt	45	47	4	2412,-		D
			8x18	48	Image Motion	45	47	4	2204,-		D
			8x18	92	Image Colt L.Gun	45	47	4	2296,-		D
			8,5x18	24	ATS Mizar	48	47	-2	3016,-	**OE-fit**	B,C,D
			8,5x18	25	ATS Mizar G.Blk	48	47	-2	3116,-	**OE-fit**	B,C,D
			8,5x18	93	Image Star FF L.Gun	56	54	-4	2936,-	**OE-fit**, kun bak	B,C,D
			8,5x18	94	Image Star FF Slv	56	54	-4	2936,-	**OE-fit**, kun bak	B,C,D
			8,5x18	95	Image Star FF G.Blk/Pol	56	54	-4	3076,-	**OE-fit**, kun bak	B,C,D
			9x18	16	Advanti Inizio DST	45	54	18	3828,-	Kun bak	D,M
			7,5x19	2	Nitro Sapphire FF	48	47	-2	4572,-		D
			8x19	10	Nitro Demon H.Slv	47	47	0	3624,-		D
			8x19	11	Nitro Demon	47	47	0	3376,-		D
			8x19	16	Advanti Inizio DST	45	47	4	4412,-		D
			8x19	24	ATS Mizar	48	47	-2	3720,-	**OE-fit**	B,C,D
			8x19	25	ATS Mizar G.Blk	48	47	-2	3868,-	**OE-fit**	B,C,D
			8x19	26	CSP 18 G.Blk/pol	47	47	0	3596,-		D
			8x19	27	CSP 18	47	47	0	3444,-		D
			8x19	28	CSP 18 G.Blk	47	47	0	3444,-		D
			8x19	48	Image Motion	45	47	4	2532,-		D

Forts. neste side »

Bilmerke - Bilmodell	Årsmodell	Dimensjon	Felgdim.	Bilde	Felgmodell	ET Felg	ET Bil	Avvik ET	Veil. Pris eks. MVA	Merknader	B,C D, M
MERCEDES (forts.)			PCD: **5-112** Bolt - Mutter: **14x1,50B**			CB: **66,6**					
			8,5x19	5	Nitro Volcano G.Gun	45	47	4	4388,-		D
			8,5x19	6	Nitro Volcano	45	47	4	4632,-		D
			8,5x19	9	Nitro Sabre G.Blk	45	47	4	4292,-		D
			8,5x19	36	Image Colt	45	47	4	3028,-		D
			8,5x19	92	Image Colt L.Gun	45	47	4	2876,-		D
			9x19	10	Nitro Demon H.Slv	45	54	18	3624,-	Kun bak	D,M
			9x19	11	Nitro Demon	45	54	18	3376,-	Kun bak	D,M
			9,5x19	5	Nitro Volcano G.Gun	50	54	8	4388,-	Kun bak	D
			9,5x19	6	Nitro Volcano	50	54	8	4632,-	Kun bak	D
			8x20	2	Nitro Sapphire FF	48	47	-2	5096,-		D
			8,5x20	3	Nitro Turismo FF	43	47	8	4812,-		D
			8,5x20	4	Nitro Turismo FF G.Gun/Pol	43	47	8	4964,-		D
			8,5x20	5	Nitro Volcano G.Gun	45	47	4	4824,-		D
			8,5x20	6	Nitro Volcano	45	47	4	5164,-		D
			8,5x20	7	Nitro Spark G.Blk/Grey	45	47	4	4660,-		D
			8,5x20	8	Nitro Spark G.Blk/Red	45	47	4	4660,-		D
			8,5x20	9	Nitro Sabre G.Blk	45	47	4	4800,-		D
			8,5x20	10	Nitro Demon H.Slv	45	47	4	4104,-		D
			8,5x20	11	Nitro Demon	45	47	4	3808,-		D
			8,5x20	24	ATS Mizar	40	47	14	5948,-		C,D
			8,5x20	25	ATS Mizar G.Blk	40	47	14	6020,-		C,D
			8,5x20	36	Image Colt	45	47	4	3432,-		D
			8,5x20	92	Image Colt L.Gun	45	47	4	3276,-		
			9x20	10	Nitro Demon H.Slv	48	54	12	4104,-	Kun bak	D,M
			9,5x20	5	Nitro Volcano G.Gun	50	54	8	4824,-	Kun bak	D,M
			9,5x20	6	Nitro Volcano	50	54	8	5164,-	Kun bak	D,M
			10x20	3	Nitro Turismo FF	50	54	8	5116,-	Kun bak	D,M
			10x20	4	Nitro Turismo FF G.Gun/Pol	50	54	8	5288,-	Kun bak	D,M
MERCEDES			PCD: **5-112** Bolt - Mutter: **14x1,50B**			CB: **66,6**					
C-Class (C204) 63 AMG coupe	03.11-09.15	18-20	8x18	10	Nitro Demon H.Slv	40	45	10	2972,-		D
C-Class (W204) 63 AMG	03.08-12.13	18-20	8x18	11	Nitro Demon	40	45	10	2784,-		D
			8x18	17	BM Drive M.Gun	45	45	0	2296,-		D
			8x19	10	Nitro Demon H.Slv	40	45	10	3624,-		D
			8,5x19	5	Nitro Volcano G.Gun	45	45	0	4388,-		D
			8,5x19	6	Nitro Volcano	45	45	0	4632,-		D
			9x19	10	Nitro Demon H.Slv	45	54	18	3624,-	Kun bak	D
			9x19	11	Nitro Demon	45	54	18	3376,-	Kun bak	D
			9,5x19	5	Nitro Volcano G.Gun	50	54	8	4388,-	Kun bak	D
			9,5x19	6	Nitro Volcano	50	54	8	4632,-	Kun bak	D
			8,5x20	5	Nitro Volcano G.Gun	45	45	0	4824,-		D
			8,5x20	6	Nitro Volcano	45	45	0	5164,-		D
			8,5x20	10	Nitro Demon H.Slv	45	45	0	4104,-		D
			8,5x20	11	Nitro Demon	45	45	0	3808,-		D
			9,5x20	5	Nitro Volcano G.Gun	50	54	8	4824,-	Kun bak	D
			9,5x20	6	Nitro Volcano	50	54	8	5164,-	Kun bak	D
MERCEDES			PCD: **5-112** Bolt - Mutter: **14x1,50B**			CB: **66,5**					
C-Class (C205) cab	11.16-	17-20	6,5x16	24	ATS Mizar	38	48	20	1812,-	**OE-fit**	B,C,D
C-Class (C205) coupe	10.15-	17-20	6,5x16	25	ATS Mizar G.Blk	38	48	20	1880,-	**OE-fit**	B,C,D
C-Class (W205) sedan	12.13-	16-20	6,5x16	36	Image Colt	35	48	26	1624,-		D
C250CDI 4-M, C350e, C400 17"			6,5x16	92	Image Colt L.Gun	35	48	26	1548,-		D
(Biler med AMG sportpakke 17")			7x16	17	BM Drive M.Gun	45	48	6	1476,-		D
C-Class (W205) t-modell	09.14-	16-20	7x16	48	Image Motion	45	48	6	1468,-		D
C250CDI 4-matic, C400 17"			7x16	50	Image Legend	45	48	6	1544,-		D
(Biler med AMG sportpakke 17")			7,5x16	24	ATS Mizar	45	48	6	1812,-	**OE-fit**	B,C,D
			7,5x16	25	ATS Mizar G.Blk	45	48	6	1880,-	**OE-fit**	B,C,D
			7x17	24	ATS Mizar	48	48	0	2268,-	**OE-fit**	B,C,D
			7x17	25	ATS Mizar G.Blk	48	48	0	2340,-	**OE-fit**	B,C,D
			7x17	93	Image Star FF L.Gun	48	48	0	2216,-	**OE-fit**	B,C,D
			7x17	95	Image Star FF G.Blk/Pol	48	48	0	2336,-	**OE-fit**	B,C,D
			7,5x17	9	Nitro Sabre G.Blk	45	48	6	3052,-		D
			7,5x17	16	Advanti Inizio DST	42	48	12	3324,-		D
			7,5x17	24	ATS Mizar	47	48	2	2268,-	**OE-fit**	B,C,D
			7,5x17	25	ATS Mizar G.Blk	47	48	2	2340,-	**OE-fit**	B,C,D
			7,5x17	36	Image Colt	45	48	6	1956,-		D
			7,5x17	92	Image Colt L.Gun	45	48	6	1876,-		D
			8x17	17	BM Drive M.Gun	45	48	6	1736,-		D
			8x17	24	ATS Mizar	48	48	0	2268,-	**OE-fit**	B,C,D
			8x17	25	ATS Mizar G.Blk	48	48	0	2340,-	**OE-fit**	B,C,D
			8x17	48	Image Motion	45	48	6	1736,-		D
			7,5x18	2	Nitro Sapphire FF	48	48	0	3944,-		D
			7,5x18	93	Image Star FF L.Gun	44	48	8	2936,-	**OE-fit**	B,C,D
			7,5x18	94	Image Star FF Slv	44	48	8	2936,-	**OE-fit**	B,C,D
			7,5x18	95	Image Star FF G.Blk/Pol	44	48	8	3076,-	**OE-fit**	B,C,D
			8x18	7	Nitro Spark G.Blk/Grey	45	48	6	3476,-		C,D
			8x18	8	Nitro Spark G.Blk/Red	45	48	6	3476,-		C,D
			8x18	9	Nitro Sabre G.Blk	45	48	6	3496,-		D
			8x18	10	Nitro Demon H.Slv	47	48	2	2972,-		D
			8x18	11	Nitro Demon	47	48	2	2784,-		D
			8x18	16	Advanti Inizio DST	45	48	6	3828,-		D
			8x18	17	BM Drive M.Gun	45	48	6	2296,-		D
			8x18	26	CSP 18 G.Blk/pol	47	48	2	2956,-		D
			8x18	27	CSP 18	47	48	2	2972,-		D
			8x18	28	CSP 18 G.Blk	47	48	2	2972,-		D
			8x18	36	Image Colt	45	48	6	2412,-		D
			8x18	48	Image Motion	45	48	6	2204,-		D
			8x18	92	Image Colt L.Gun	45	48	6	2296,-		D

Forts. neste side »

Bilmerke - Bilmodell	Årsmodell	Dimensjon	Felgdim.	Bilde	Felgmodell	ET Felg	ET Bil	Avvik ET	Veil. Pris eks. MVA	Merknader	B,C D, M
MERCEDES (forts.)				PCD: **5-112** Bolt - Mutter: **14x1,50B**		CB: **66,5**					
			8,5x18	24	ATS Mizar	48	48	0	3016,-	**OE-fit**	B,C,D
			8,5x18	25	ATS Mizar G.Blk	48	48	0	3116,-	**OE-fit**	B,C,D
			8,5x18	93	Image Star FF L.Gun	56	56	0	2936,-	**OE-fit**, kun bak	B,C,D
			8,5x18	94	Image Star FF Slv	56	56	0	2936,-	**OE-fit**, kun bak	B,C,D
			8,5x18	95	Image Star FF G.Blk/Pol	56	56	0	3076,-	**OE-fit**, kun bak	B,C,D
			9x18	16	Advanti Inizio DST	45	56	22	3828,-	Kun bak	D,M
			7,5x19	2	Nitro Sapphire FF	48	48	0	4572,-		D
			8x19	10	Nitro Demon H.Slv	47	48	2	3624,-		D
			8x19	11	Nitro Demon	47	48	2	3376,-		D
			8x19	16	Advanti Inizio DST	45	48	6	4412,-		D
			8x19	24	ATS Mizar	48	48	0	3720,-	**OE-fit**	B,C,D
			8x19	25	ATS Mizar G.Blk	48	48	0	3868,-	**OE-fit**	B,C,D
			8x19	26	CSP 18 G.Blk/pol	47	48	2	3596,-		D
			8x19	27	CSP 18	47	48	2	3444,-		D
			8x19	28	CSP 18 G.Blk	47	48	2	3444,-		D
			8x19	48	Image Motion	45	48	6	2532,-		D
			8,5x19	5	Nitro Volcano G.Gun	45	48	6	4388,-		D
			8,5x19	6	Nitro Volcano	45	48	6	4632,-		D
			8,5x19	9	Nitro Sabre G.Blk	45	48	6	4292,-		D
			8,5x19	36	Image Colt	45	48	6	3028,-		D
			8,5x19	92	Image Colt L.Gun	45	48	6	2876,-		D
			9x19	10	Nitro Demon H.Slv	45	56	22	3624,-	Kun bak	D
			9x19	11	Nitro Demon	45	56	22	3376,-	Kun bak	D
			9,5x19	5	Nitro Volcano G.Gun	50	56	12	4388,-	Kun bak	D
			9,5x19	6	Nitro Volcano	50	56	12	4632,-	Kun bak	D
			8x20	2	Nitro Sapphire FF	48	48	0	5096,-		D
			8,5x20	3	Nitro Turismo FF	43	48	10	4812,-		D
			8,5x20	4	Nitro Turismo FF G.Gun/Pol	43	48	10	4964,-		D
			8,5x20	5	Nitro Volcano G.Gun	45	48	6	4824,-		D
			8,5x20	6	Nitro Volcano	45	48	6	5164,-		D
			8,5x20	7	Nitro Spark G.Blk/Grey	45	48	6	4660,-		D
			8,5x20	8	Nitro Spark G.Blk/Red	45	48	6	4660,-		D
			8,5x20	9	Nitro Sabre G.Blk	45	48	6	4800,-		D
			8,5x20	10	Nitro Demon H.Slv	45	48	6	4104,-		D
			8,5x20	11	Nitro Demon	45	48	6	3808,-		D
			8,5x20	24	ATS Mizar	40	48	16	5948,-		C,D
			8,5x20	25	ATS Mizar G.Blk	40	48	16	6020,-		C,D
			8,5x20	36	Image Colt	45	48	6	3432,-		D
			8,5x20	92	Image Colt L.Gun	45	48	6	3276,-		D
			9x20	10	Nitro Demon H.Slv	48	56	16	4104,-	Kun bak	D
			9,5x20	5	Nitro Volcano G.Gun	50	56	12	4824,-	Kun bak	D,M
			9,5x20	6	Nitro Volcano	50	56	12	5164,-	Kun bak	D,M
			10x20	3	Nitro Turismo FF	50	56	12	5116,-	Kun bak	D,M
			10x20	4	Nitro Turismo FF G.Gun/Pol	50	56	12	5288,-	Kun bak	D,M
MERCEDES				PCD: **5-112** Bolt - Mutter: **14x1,50B**		CB: **66,5**					
C-Class (W205) 300e sedan	09.19-	17-20	7,5x18	93	Image Star FF L.Gun	44	44	0	2936,-	**OE-fit**	B,C,D
(Biler med AMG sportpakke 18")			7,5x18	94	Image Star FF Slv	44	44	0	2936,-	**OE-fit**	B,C,D
C-Class (W205) 300e t-modell	09.19-	18-20	7,5x18	95	Image Star FF G.Blk/Pol	44	44	0	3076,-	**OE-fit**	B,C,D
C-Class (W205) C300de sedan	09.19-	17-20	8x18	24	ATS Mizar	48	44	-8	3016,-	**OE-fit**	B,C,D
(Biler med AMG sportpakke 18")			8x18	25	ATS Mizar G.Blk	48	44	-8	3116,-	**OE-fit**	B,C,D
C-Class (W205) C300de t-modell	09.19-	18-20	8,5x18	24	ATS Mizar	48	56	16	3016,-	**OE-fit**, kun bak	B,C,D
(Biler med AMG sportpakke 18")			8,5x18	25	ATS Mizar G.Blk	48	56	16	3116,-	**OE-fit**, kun bak	B,C,D
			8,5x18	93	Image Star FF L.Gun	56	56	0	2936,-	**OE-fit**, kun bak	B,C,D
			8,5x18	94	Image Star FF Slv	56	56	0	2936,-	**OE-fit**, kun bak	B,C,D
			8,5x18	95	Image Star FF G.Blk/Pol	56	56	0	3076,-	**OE-fit**, kun bak	B,C,D
MERCEDES				PCD: **5-112** Bolt - Mutter: **14x1,50B**		CB: **66,5**					
C-Class (C205) 43 AMG cab	08.16-	18-20	8x18	2	Nitro Sapphire FF	30	33	6	4036,-		D
C450 AMG			8x18	10	Nitro Demon H.Slv	30	33	6	2972,-		D
C-Class (C205) 43 AMG coupe	08.16-	18-20	8x18	16	Advanti Inizio DST	30	33	6	3828,-		D
C450 AMG			8x18	17	BM Drive M.Gun	30	33	6	2296,-		D
C-Class (W205) 43 AMG sedan	06.15-	18-20	8x18	46	Image Stella	30	33	6	2276,-		D
C450 AMG			8x18	47	Image Stella M.Blk	30	33	6	2276,-		D
C-Class (W205) 43 AMG t-modell	06.15-	18-20	8x18	48	Image Motion	35	33	-4	2204,-		D
C450 AMG			8x18	49	Image Motion G.Gun	35	33	-4	2204,-		D
			9x18	16	Advanti Inizio DST	40	49	18	3828,-	Kun bak	D,M
			8x19	2	Nitro Sapphire FF	30	33	6	4684,-		D
			8x19	3	Nitro Turismo FF	30	33	6	4492,-		D
			8x19	4	Nitro Turismo FF G.Gun/Pol	30	33	6	4644,-		D
			8x19	10	Nitro Demon H.Slv	30	33	6	3624,-		D
			8x19	16	Advanti Inizio DST	30	33	6	4412,-		D
			8x19	48	Image Motion	35	33	-4	2532,-		D
			8x19	49	Image Motion G.Gun	35	33	-4	2532,-		D
			9x19	3	Nitro Turismo FF	45	49	8	4660,-	Kun bak	D
			9x19	4	Nitro Turismo FF G.Gun/Pol	45	49	8	4812,-	Kun bak	D
			9,5x19	3	Nitro Turismo FF	50	49	-2	4660,-	Kun bak	D
			9,5x19	4	Nitro Turismo FF G.Gun/Pol	50	49	-2	4812,-	Kun bak	D
			9,5x19	16	Advanti Inizio DST	40	49	18	4412,-	Kun bak	D
			8,5x20	2	Nitro Sapphire FF	30	33	6	5216,-		D
MERCEDES				PCD: **5-112** Bolt - Mutter: **14x1,50B**		CB: **66,5**					
C-Class (W205) 63 AMG	10.14-	18-20	8x18	10	Nitro Demon H.Slv	35	38	6	2972,-		D
C-Class (W205) 63 S AMG	10.14-	19-20	8x18	11	Nitro Demon	35	38	6	2784,-		D
(Keramiska bremser spør oss!)			8x18	17	BM Drive M.Gun	35	38	6	2296,-		D
			8x18	46	Image Stella	35	38	6	2276,-		D
			8x18	47	Image Stella M.Blk	35	38	6	2276,-		D
			8x18	48	Image Motion	35	38	6	2204,-		D

Forts. neste side »

Bilmerke - Bilmodell	Årsmodell	Dimensjon	Felgdim.	Bilde	Felgmodell	ET Felg	ET Bil	Avvik ET	Veil. Pris eks. MVA	Merknader	B,C D, M
MERCEDES (forts.)			PCD: **5-112** Bolt - Mutter: **14x1,50B**			CB: **66,5**					
			8x18	49	Image Motion G.Gun	35	38	6	2204,-		D
			8x19	10	Nitro Demon H.Slv	35	38	6	3624,-		D
			8x19	11	Nitro Demon	35	38	6	3376,-		D
			8x19	48	Image Motion	35	38	6	2532,-		D
			8x19	49	Image Motion G.Gun	35	38	6	2532,-		D
			8,5x19	3	Nitro Turismo FF	35	38	6	4492,-		D
			8,5x19	4	Nitro Turismo FF G.Gun/Pol	35	38	6	4644,-		D
			8,5x19	36	Image Colt	35	38	6	3028,-		D
			8,5x19	92	Image Colt L.Gun	35	38	6	2876,-		D
			9x19	10	Nitro Demon H.Slv	45	56	22	3624,-	Kun bak	D
			9x19	11	Nitro Demon	45	56	22	3376,-	Kun bak	D
			9,5x19	3	Nitro Turismo FF	50	56	12	4660,-	Kun bak	D
			9,5x19	4	Nitro Turismo FF G.Gun/Pol	50	56	12	4812,-	Kun bak	D
			8,5x20	3	Nitro Turismo FF	35	38	6	4812,-		D
			8,5x20	4	Nitro Turismo FF G.Gun/Pol	35	38	6	4964,-		D
			8,5x20	10	Nitro Demon H.Slv	38	38	0	4104,-		D
			8,5x20	11	Nitro Demon	38	38	0	3808,-		D
			8,5x20	36	Image Colt	35	38	6	3432,-		D
			8,5x20	92	Image Colt L.Gun	35	38	6	3276,-		D
			9x20	10	Nitro Demon H.Slv	48	56	16	4104,-	Kun bak	D
			10x20	3	Nitro Turismo FF	50	56	12	5116,-	Kun bak	D,M
			10x20	4	Nitro Turismo FF G.Gun/Pol	50	56	12	5288,-	Kun bak	D,M
MERCEDES			PCD: **5-112** Bolt - Mutter: **14x1,50B**			CB: **66,5**					
C-Class (C205) 63 AMG cab	11.16-	18-20	9x19	3	Nitro Turismo FF	20	25	10	4660,-		D
C-Class (C205) 63 AMG coupe	10.15-	18-20	9x19	4	Nitro Turismo FF G.Gun/Pol	20	25	10	4812,-		D
C-Class (C205) 63 S AMG cab	11.16-	19-20	10x19	3	Nitro Turismo FF	50	57	14	4812,-	Kun bak	D
C-Class (C205) 63 S AMG coupe	10.15-	19-20	10x19	4	Nitro Turismo FF G.Gun/Pol	50	57	14	4964,-	Kun bak	D
MERCEDES			PCD: **5-112** Bolt - Mutter: **14x1,50B**			CB: **66,6**					
E-Class (W211)	03.02-02.09	16-21	7x16	17	BM Drive M.Gun	35	37	4	1476,-		D
E-Class (W211) E400CDI	05.02-07.06	17-21	7x16	40	Image Spirit	35	37	4	1264,-		D
E-Class (W211) E420CDI	07.06-02.09	17-21	7x16	50	Image Legend	35	37	4	1544,-		D
E-Class (W211) E500	05.02-08.09	17-21	7,5x17	46	Image Stella	35	37	4	1812,-		D
(E400CDI, E420CDI og E500			7,5x17	47	Image Stella M.Blk	35	37	4	1812,-		D
minst 8x17, sedan og kombi)			7,5x17	50	Image Legend	35	37	4	1812,-		D
E-Class (W211) t-modell	03.02-10.09	16-21	8x17	17	BM Drive M.Gun	35	37	4	1736,-		D
			8x17	40	Image Spirit	35	37	4	1476,-		D
			8x18	7	Nitro Spark G.Blk/Grey	35	37	4	3476,-		C,D
			8x18	10	Nitro Demon H.Slv	35	37	4	2972,-		D
			8x18	11	Nitro Demon	35	37	4	2784,-		D
			8x18	17	BM Drive M.Gun	35	37	4	2296,-		D
			8x18	40	Image Spirit	35	37	4	1912,-		D
			8x18	46	Image Stella	35	37	4	2276,-		D
			8x18	47	Image Stella M.Blk	35	37	4	2276,-		
			8x18	50	Image Legend	35	37	4	2276,-		D
			8,5x18	24	ATS Mizar	34	37	6	3016,-		C,D
			8,5x18	25	ATS Mizar G.Blk	34	37	6	3116,-		C,D
			8x19	10	Nitro Demon H.Slv	35	37	4	3624,-		D
			8x19	11	Nitro Demon	35	37	4	3376,-		D
			8,5x19	9	Nitro Sabre G.Blk	35	37	4	4292,-		D
			8,5x19	24	ATS Mizar	34	37	6	4176,-		C,D
			8,5x19	25	ATS Mizar G.Blk	34	37	6	4116,-		C,D
			8,5x20	7	Nitro Spark G.Blk/Grey	35	37	4	4660,-		D
			8,5x20	9	Nitro Sabre G.Blk	35	37	4	4800,-		D
			8,5x20	10	Nitro Demon H.Slv	38	37	-2	4104,-		D
			8,5x20	11	Nitro Demon	38	37	-2	3808,-		D
			8,5x20	24	ATS Mizar	40	37	-6	5948,-		C,D
			8,5x20	25	ATS Mizar G.Blk	40	37	-6	6020,-		C,D
			9x20	10	Nitro Demon H.Slv	40	37	-6	4104,-		D
			9x20	11	Nitro Demon	40	37	-6	3808,-		D
			9x20	15	Nitro Magnum	35	37	4	4572,-		D
			9,5x20	10	Nitro Demon H.Slv	45	37	-16	4104,-	Kun bak	D
			9,5x20	11	Nitro Demon	45	37	-16	3808,-	Kun bak	D
MERCEDES			PCD: **5-112** Bolt - Mutter: **14x1,50B**			CB: **66,6**					
E-Class (W211) E55 AMG	10.02-06.06	18-21	8x18	46	Image Stella	35	38	6	2276,-		D
E-Class (W211) E63 AMG	07.06-08.09	18-21	8x18	47	Image Stella M.Blk	35	38	6	2276,-		
			8,5x19	3	Nitro Turismo FF	35	38	6	4492,-		D
			8,5x19	4	Nitro Turismo FF G.Gun/Pol	35	38	6	4644,-		D
			9,5x19	3	Nitro Turismo FF	40	44	8	4660,-	Kun bak	D
			9,5x19	4	Nitro Turismo FF G.Gun/Pol	40	44	8	4812,-	Kun bak	D
			8,5x20	3	Nitro Turismo FF	35	38	6	4812,-		D
			8,5x20	4	Nitro Turismo FF G.Gun/Pol	35	38	6	4964,-		D
			10,5x20	3	Nitro Turismo FF	40	44	8	5116,-	Kun bak	D,M
			10,5x20	4	Nitro Turismo FF G.Gun/Pol	40	44	8	5288,-	Kun bak	D,M
MERCEDES			PCD: **5-112** Bolt - Mutter: **14x1,50B**			CB: **66,5**					
E-Class (C207) coupe	03.09-12.16	16-20	6,5x16	36	Image Colt	35	45	20	1624,-		D
E350CDI, E350CGI, E500 17"			6,5x16	92	Image Colt L.Gun	35	45	20	1548,-		D
(Biler med AMG sportpakke 18")			7x16	17	BM Drive M.Gun	35	45	20	1476,-		D
E-Class (R207) cab	01.10-03.17	17-20	7x16	40	Image Spirit	35	45	20	1264,-		D
(Biler med AMG sportpakke 18")			7x16	48	Image Motion	35	45	20	1468,-		D
			7x16	50	Image Legend	35	45	20	1544,-		D
			7,5x16	24	ATS Mizar	45	45	0	1812,-	**OE-fit**	B,C,D
			7,5x16	25	ATS Mizar G.Blk	45	45	0	1880,-	**OE-fit**	B,C,D
			7,5x17	24	ATS Mizar	40	45	10	2268,-		C,D
			7,5x17	25	ATS Mizar G.Blk	40	45	10	2340,-		C,D
			7,5x17	36	Image Colt	35	45	20	1956,-		D

Forts. neste side »

Bilmerke - Bilmodell	Årsmodell	Dimensjon	Felgdim.	Bilde	Felgmodell	ET Felg	ET Bil	Avvik ET	Veil. Pris eks. MVA	Merknader	B,C D, M
MERCEDES (forts.)				PCD: **5-112** Bolt - Mutter: **14x1,50B**		CB: **66,5**					
			7,5x17	46	Image Stella	35	45	20	1812,-		D
			7,5x17	47	Image Stella M.Blk	35	45	20	1812,-		D
			7,5x17	50	Image Legend	35	45	20	1812,-		D
			7,5x17	92	Image Colt L.Gun	35	45	20	1876,-		D
			7,5x17	93	Image Star FF L.Gun	40	45	10	2216,-		C,D
			7,5x17	95	Image Star FF G.Blk/Pol	40	45	10	2336,-		C,D
			8x17	9	Nitro Sabre G.Blk	35	45	20	3108,-		D
			8x17	17	BM Drive M.Gun	35	45	20	1736,-		D
			8x17	40	Image Spirit	35	45	20	1476,-		D
			8x17	48	Image Motion	35	45	20	1736,-		D
			8x17	49	Image Motion G.Gun	35	45	20	1736,-		D
			8x18	2	Nitro Sapphire FF	39	45	12	4036,-		D
			8x18	7	Nitro Spark G.Blk/Grey	35	45	20	3476,-		C,D
			8x18	9	Nitro Sabre G.Blk	35	45	20	3496,-		D
			8x18	10	Nitro Demon H.Slv	35	45	20	2972,-		D
			8x18	11	Nitro Demon	35	45	20	2784,-		D
			8x18	16	Advanti Inizio DST	35	45	20	3828,-		D
			8x18	17	BM Drive M.Gun	35	45	20	2296,-		D
			8x18	36	Image Colt	35	45	20	2412,-		D
			8x18	40	Image Spirit	35	45	20	1912,-		D
			8x18	46	Image Stella	35	45	20	2276,-		D
			8x18	47	Image Stella M.Blk	35	45	20	2276,-		D
			8x18	48	Image Motion	35	45	20	2204,-		D
			8x18	49	Image Motion G.Gun	35	45	20	2204,-		D
			8x18	50	Image Legend	35	45	20	2276,-		D
			8x18	92	Image Colt L.Gun	35	45	20	2296,-		D
			8x18	93	Image Star FF L.Gun	38	45	14	2936,-		C,D
			8x18	95	Image Star FF G.Blk/Pol	38	45	14	3076,-		C,D
			8,5x18	24	ATS Mizar	34	45	22	3016,-	**OE-fit**	B,C,D
			8,5x18	25	ATS Mizar G.Blk	34	45	22	3116,-	**OE-fit**	B,C,D
			9x18	16	Advanti Inizio DST	45	49	8	3828,-	Kun bak	D
			8x19	2	Nitro Sapphire FF	39	45	12	4684,-		D
			8x19	10	Nitro Demon H.Slv	35	45	20	3624,-		D
			8x19	11	Nitro Demon	35	45	20	3376,-		D
			8x19	16	Advanti Inizio DST	35	45	20	4412,-		D
			8x19	48	Image Motion	35	45	20	2532,-		D
			8x19	49	Image Motion G.Gun	35	45	20	2532,-		D
			8,5x19	2	Nitro Sapphire FF	40	45	10	4684,-		D
			8,5x19	3	Nitro Turismo FF	35	45	20	4492,-		D
			8,5x19	4	Nitro Turismo FF G.Gun/Pol	35	45	20	4644,-		D
			8,5x19	5	Nitro Volcano G.Gun	45	45	0	4388,-		D
			8,5x19	6	Nitro Volcano	45	45	0	4632,-		D
			8,5x19	9	Nitro Sabre G.Blk	35	45	20	4292,-		D
			8,5x19	24	ATS Mizar	34	45	22	4176,-	**OE-fit**	B,C,D
			8,5x19	25	ATS Mizar G.Blk	34	45	22	4116,-	**OE-fit**	B,C,D
			8,5x19	36	Image Colt	35	45	20	3028,-		D
			8,5x19	92	Image Colt L.Gun	35	45	20	2876,-		D
			9x19	3	Nitro Turismo FF	45	49	8	4660,-	Kun bak	D
			9x19	4	Nitro Turismo FF G.Gun/Pol	45	49	8	4812,-	Kun bak	D
			9x19	10	Nitro Demon H.Slv	45	49	8	3624,-	Kun bak	D
			9x19	11	Nitro Demon	45	49	8	3376,-	Kun bak	D
			9,5x19	3	Nitro Turismo FF	40	49	18	4660,-	Kun bak	D
			9,5x19	4	Nitro Turismo FF G.Gun/Pol	40	49	18	4812,-	Kun bak	D
			9,5x19	5	Nitro Volcano G.Gun	40	49	18	4388,-	Kun bak	D,M
			9,5x19	6	Nitro Volcano	40	49	18	4632,-	Kun bak	D,M
			9,5x19	16	Advanti Inizio DST	45	49	8	4412,-	Kun bak	D
			8,5x20	2	Nitro Sapphire FF	40	45	10	5216,-		D
			8,5x20	3	Nitro Turismo FF	35	45	20	4812,-		D
			8,5x20	4	Nitro Turismo FF G.Gun/Pol	35	45	20	4964,-		D
			8,5x20	5	Nitro Volcano G.Gun	45	45	0	4824,-		D
			8,5x20	6	Nitro Volcano	45	45	0	5164,-		D
			8,5x20	7	Nitro Spark G.Blk/Grey	35	45	20	4660,-		D
			8,5x20	9	Nitro Sabre G.Blk	35	45	20	4800,-		D
			8,5x20	10	Nitro Demon H.Slv	38	45	14	4104,-		D
			8,5x20	11	Nitro Demon	38	45	14	3808,-		D
			8,5x20	36	Image Colt	35	45	20	3432,-		D
			8,5x20	92	Image Colt L.Gun	35	45	20	3276,-		D
			9x20	10	Nitro Demon H.Slv	40	49	18	4104,-	Kun bak	D
			9x20	11	Nitro Demon	40	49	18	3808,-	Kun bak	D
			9,5x20	5	Nitro Volcano G.Gun	40	49	18	4824,-	Kun bak	D,M
			9,5x20	6	Nitro Volcano	40	49	18	5164,-	Kun bak	D,M
			9,5x20	10	Nitro Demon H.Slv	45	49	8	4104,-	Kun bak	D
			9,5x20	11	Nitro Demon	45	49	8	3808,-	Kun bak	D
			10x20	3	Nitro Turismo FF	50	49	-2	5116,-	Kun bak	D,M
			10x20	4	Nitro Turismo FF G.Gun/Pol	50	49	-2	5288,-	Kun bak	D,M

Bilmerke - Bilmodell	Årsmodell	Dimensjon	Felgdim.	Bilde	Felgmodell	ET Felg	ET Bil	Avvik ET	Veil. Pris eks. MVA	Merknader	B,C D, M
MERCEDES				PCD: **5-112** Bolt - Mutter: **14x1,50B**		CB: **66,5**					
E-Class (S212) t-modell	11.09-07.16	16-21	6,5x16	36	Image Colt	35	48	26	1624,-		D
E400, E500 17"			6,5x16	92	Image Colt L.Gun	35	48	26	1548,-		D
(Biler med sportpakke 17")			7x16	17	BM Drive M.Gun	35	48	26	1476,-		D
E-Class (S212) t-modell 4-matic	11.09-07.16	17-21	7x16	40	Image Spirit	35	48	26	1264,-		D
E500 18"			7x16	48	Image Motion	35	48	26	1468,-		D
E-Class (W212) sedan	03.09-01.16	16-21	7,5x16	24	ATS Mizar	45	48	6	1812,-	**OE-fit**	B,C,D
E500 17"			7,5x16	25	ATS Mizar G.Blk	45	48	6	1880,-	**OE-fit**	B,C,D
(Biler med sportpakke 17")			7,5x17	9	Nitro Sabre G.Blk	45	48	6	3052,-		D
E-Class (W212) sedan 4-matic	03.09-01.16	17-21	7,5x17	24	ATS Mizar	47	48	2	2268,-	**OE-fit**	B,C,D
E500 18"			7,5x17	25	ATS Mizar G.Blk	47	48	2	2340,-	**OE-fit**	B,C,D
			7,5x17	36	Image Colt	45	48	6	1956,-		D
			7,5x17	46	Image Stella	35	48	26	1812,-		D
			7,5x17	47	Image Stella M.Blk	35	48	26	1812,-		D
			7,5x17	92	Image Colt L.Gun	45	48	6	1876,-		D
			7,5x17	93	Image Star FF L.Gun	40	48	16	2216,-		C,D
			7,5x17	95	Image Star FF G.Blk/Pol	40	48	16	2336,-		C,D
			8x17	17	BM Drive M.Gun	45	48	6	1736,-		D
			8x17	24	ATS Mizar	48	48	0	2268,-	**OE-fit**	B,C,D
			8x17	25	ATS Mizar G.Blk	48	48	0	2340,-	**OE-fit**	B,C,D
			8x17	40	Image Spirit	35	48	26	1476,-		D
			8x17	48	Image Motion	45	48	6	1736,-		D
			8x18	2	Nitro Sapphire FF	39	48	18	4036,-		D
			8x18	7	Nitro Spark G.Blk/Grey	45	48	6	3476,-		C,D
			8x18	8	Nitro Spark G.Blk/Red	45	48	6	3476,-		C,D
			8x18	9	Nitro Sabre G.Blk	45	48	6	3496,-		D
			8x18	10	Nitro Demon H.Slv	47	48	2	2972,-		D
			8x18	11	Nitro Demon	47	48	2	2784,-		D
			8x18	16	Advanti Inizio DST	45	48	6	3828,-		D
			8x18	17	BM Drive M.Gun	45	48	6	2296,-		D
			8x18	36	Image Colt	45	48	6	2412,-		D
			8x18	40	Image Spirit	35	48	26	1912,-		D
			8x18	46	Image Stella	35	48	26	2276,-		D
			8x18	47	Image Stella M.Blk	35	48	26	2276,-		D
			8x18	48	Image Motion	45	48	6	2204,-		D
			8x18	92	Image Colt L.Gun	45	48	6	2296,-		D
			8x18	93	Image Star FF L.Gun	43	48	10	2936,-		C,D
			8x18	94	Image Star FF Slv	43	48	10	2936,-		C,D
			8x18	95	Image Star FF G.Blk/Pol	43	48	10	3076,-		C,D
			8,5x18	24	ATS Mizar	48	48	0	3016,-	**OE-fit**	B,C,D
			8,5x18	25	ATS Mizar G.Blk	48	48	0	3116,-	**OE-fit**	B,C,D
			9x18	16	Advanti Inizio DST	45	54	18	3828,-	Kun bak	D
			9x18	93	Image Star FF L.Gun	53	54	2	2936,-	Kun bak	C,D
			9x18	94	Image Star FF Slv	53	54	2	2936,-	Kun bak	C,D
			9x18	95	Image Star FF G.Blk/Pol	53	54	2	3076,-	Kun bak	C,D
			8x19	2	Nitro Sapphire FF	39	48	18	4684,-		D
			8x19	10	Nitro Demon H.Slv	47	48	2	3624,-		D
			8x19	11	Nitro Demon	47	48	2	3376,-		D
			8x19	16	Advanti Inizio DST	45	48	6	4412,-		D
			8x19	24	ATS Mizar	43	48	10	3720,-	**OE-fit**	B,C,D
			8x19	25	ATS Mizar G.Blk	43	48	10	3868,-	**OE-fit**	B,C,D
			8x19	48	Image Motion	45	48	6	2532,-		D
			8,5x19	2	Nitro Sapphire FF	40	48	16	4684,-		D
			8,5x19	3	Nitro Turismo FF	35	48	26	4492,-		D
			8,5x19	4	Nitro Turismo FF G.Gun/Pol	35	48	26	4644,-		D
			8,5x19	5	Nitro Volcano G.Gun	40	48	16	4388,-		D
			8,5x19	6	Nitro Volcano	40	48	16	4632,-		D
			8,5x19	9	Nitro Sabre G.Blk	45	48	6	4292,-		D
			8,5x19	36	Image Colt	45	48	6	3028,-		D
			8,5x19	92	Image Colt L.Gun	45	48	6	2876,-		D
			9x19	10	Nitro Demon H.Slv	45	54	18	3624,-	Kun bak	D
			9x19	11	Nitro Demon	45	54	18	3376,-	Kun bak	D
			9x19	12	Nitro Edge M.Blk	48	48	0	3884,-		D
			9,5x19	3	Nitro Turismo FF	50	54	8	4660,-	Kun bak	D
			9,5x19	4	Nitro Turismo FF G.Gun/Pol	50	54	8	4812,-	Kun bak	D
			9,5x19	5	Nitro Volcano G.Gun	50	54	8	4388,-	Kun bak	D
			9,5x19	6	Nitro Volcano	50	54	8	4632,-	Kun bak	D
			9,5x19	16	Advanti Inizio DST	45	54	18	4412,-	Kun bak	D
			10x19	3	Nitro Turismo FF	50	54	8	4812,-	Kun bak	D
			10x19	4	Nitro Turismo FF G.Gun/Pol	50	54	8	4964,-	Kun bak	D
			8,5x20	2	Nitro Sapphire FF	40	48	16	5216,-		D
			8,5x20	3	Nitro Turismo FF	35	48	26	4812,-		D
			8,5x20	4	Nitro Turismo FF G.Gun/Pol	35	48	26	4964,-		D
			8,5x20	5	Nitro Volcano G.Gun	45	48	6	4824,-		D
			8,5x20	6	Nitro Volcano	45	48	6	5164,-		D
			8,5x20	7	Nitro Spark G.Blk/Grey	45	48	6	4660,-		D
			8,5x20	8	Nitro Spark G.Blk/Red	45	48	6	4660,-		D
			8,5x20	9	Nitro Sabre G.Blk	45	48	6	4800,-		D
			8,5x20	10	Nitro Demon H.Slv	45	48	6	4104,-		D
			8,5x20	11	Nitro Demon	45	48	6	3808,-		D
			8,5x20	24	ATS Mizar	40	48	16	5948,-		C,D
			8,5x20	25	ATS Mizar G.Blk	40	48	16	6020,-		C,D
			8,5x20	36	Image Colt	45	48	6	3432,-		D
			8,5x20	92	Image Colt L.Gun	45	48	6	3276,-		D
			9x20	5	Nitro Volcano G.Gun	40	48	16	4824,-		D
			9x20	6	Nitro Volcano	40	48	16	5164,-		D
			9x20	10	Nitro Demon H.Slv	48	48	0	4104,-		D

Forts. neste side »

Bilmerke - Bilmodell	Årsmodell	Dimensjon	Felgdim.	Bilde	Felgmodell	ET Felg	ET Bil	Avvik ET	Veil. Pris eks. MVA	Merknader	B,C D, M
MERCEDES (forts.)				PCD: **5-112** Bolt - Mutter: **14x1,50B**		CB: **66,5**					
			9x20	12	Nitro Edge M.Blk	48	48	0	4220,-		D
			9x20	15	Nitro Magnum	40	48	16	4572,-		D
			9,5x20	5	Nitro Volcano G.Gun	50	54	8	4824,-	Kun bak	D
			9,5x20	6	Nitro Volcano	50	54	8	5164,-	Kun bak	D
			10x20	3	Nitro Turismo FF	50	54	8	5116,-	Kun bak	D
			10x20	4	Nitro Turismo FF G.Gun/Pol	50	54	8	5288,-	Kun bak	D
			10x20	12	Nitro Edge M.Blk	50	54	8	4220,-	Kun bak	D
			10,5x20	5	Nitro Volcano G.Gun	42	54	24	4824,-	Kun bak	D,M
			10,5x20	6	Nitro Volcano	42	54	24	5164,-	Kun bak	D,M
			9x21	5	Nitro Volcano G.Gun	40	48	16	5540,-		D
			9x21	6	Nitro Volcano	40	48	16	5996,-		D
			9x21	24	ATS Mizar	37	48	22	8276,-		C,D
			9x21	25	ATS Mizar G.Blk	37	48	22	8352,-		C,D
			9,5x21	5	Nitro Volcano G.Gun	40	54	28	5540,-	Kun bak	D,M
			9,5x21	6	Nitro Volcano	40	54	28	5996,-	Kun bak	D,M
			10,5x21	5	Nitro Volcano G.Gun	42	54	24	5540,-	Kun bak	D,M
			10,5x21	6	Nitro Volcano	42	54	24	5996,-	Kun bak	D,M
MERCEDES				PCD: **5-112** Bolt - Mutter: **14x1,50B**		CB: **66,5**					
E-Class (W212) 63 AMG	09.09-06.13	18-20	8x18	46	Image Stella	35	37	4	2276,-		D
E-Class (W212) 63 AMG	07.13-07.16	19-20	8x18	47	Image Stella M.Blk	35	37	4	2276,-		D
			8,5x19	3	Nitro Turismo FF	35	37	4	4492,-		D
			8,5x19	4	Nitro Turismo FF G.Gun/Pol	35	37	4	4644,-		D
			9x19	11	Nitro Demon	28	37	18	3376,-		D
			10x19	3	Nitro Turismo FF	50	52	4	4812,-	Kun bak	D
			10x19	4	Nitro Turismo FF G.Gun/Pol	50	52	4	4964,-	Kun bak	D
			8,5x20	3	Nitro Turismo FF	35	37	4	4812,-		D
			8,5x20	4	Nitro Turismo FF G.Gun/Pol	35	37	4	4964,-		D
			9x20	3	Nitro Turismo FF	30	37	14	4960,-		D
			9x20	4	Nitro Turismo FF G.Gun/Pol	30	37	14	5048,-		D
			9x20	10	Nitro Demon H.Slv	30	37	14	4104,-		D
			9x20	11	Nitro Demon	30	37	14	3808,-		D
			9,5x20	10	Nitro Demon H.Slv	45	37	-16	4104,-		D
			9,5x20	11	Nitro Demon	45	52	14	3808,-	Kun bak	D
			10x20	3	Nitro Turismo FF	50	52	4	5116,-	Kun bak	D
			10x20	4	Nitro Turismo FF G.Gun/Pol	50	52	4	5288,-	Kun bak	D
MERCEDES				PCD: **5-112** Bolt - Mutter: **14x1,50B**		CB: **66,5**					
E-Class (A238) cab	04.17-	17-20	7,5x17	24	ATS Mizar	40	40	0	2268,-	**OE-fit**	B,C,D
(Biler med AMG sportpakke 18")			7,5x17	25	ATS Mizar G.Blk	40	40	0	2340,-	**OE-fit**	B,C,D
E-Class (C238) coupe	01.17-	17-20	7,5x17	36	Image Colt	35	40	10	1956,-		D
E400 18"			7,5x17	46	Image Stella	35	40	10	1812,-		D
E-Class (S213) t-modell	08.16-	17-21	7,5x17	47	Image Stella M.Blk	35	40	10	1812,-		D
(Biler med AMG sportpakke 18")			7,5x17	50	Image Legend	35	40	10	1812,-		D
E-Class (W213) sedan	02.16-	16-21	7,5x17	92	Image Colt L.Gun	35	40	10	1876,-		D
E350d 17"			7,5x17	93	Image Star FF L.Gun	40	40	0	2216,-	**OE-fit**	B,C,D
(Biler med AMG sportpakke 17")			7,5x17	95	Image Star FF G.Blk/Pol	40	40	0	2336,-	**OE-fit**	B,C,D
			8x17	9	Nitro Sabre G.Blk	35	40	10	3108,-		D
			8x17	17	BM Drive M.Gun	35	40	10	1736,-		D
			8x17	40	Image Spirit	35	40	10	1476,-		D
			8x17	48	Image Motion	35	40	10	1736,-		D
			8x17	49	Image Motion G.Gun	35	40	10	1736,-		D
			8x18	2	Nitro Sapphire FF	39	40	2	4036,-		D
			8x18	7	Nitro Spark G.Blk/Grey	35	40	10	3476,-		C,D
			8x18	9	Nitro Sabre G.Blk	35	40	10	3496,-		D
			8x18	10	Nitro Demon H.Slv	40	40	0	2972,-		D
			8x18	11	Nitro Demon	40	40	0	2784,-		D
			8x18	16	Advanti Inizio DST	35	40	10	3828,-		D
			8x18	17	BM Drive M.Gun	35	40	10	2296,-		D
			8x18	24	ATS Mizar	43	40	-6	3016,-	**OE-fit**	B,C,D
			8x18	25	ATS Mizar G.Blk	43	40	-6	3116,-	**OE-fit**	B,C,D
			8x18	36	Image Colt	35	40	10	2412,-		D
			8x18	40	Image Spirit	35	40	10	1912,-		D
			8x18	46	Image Stella	35	40	10	2276,-		D
			8x18	47	Image Stella M.Blk	35	40	10	2276,-		D
			8x18	48	Image Motion	35	40	10	2204,-		D
			8x18	49	Image Motion G.Gun	35	40	10	2204,-		D
			8x18	50	Image Legend	35	40	10	2276,-		D
			8x18	92	Image Colt L.Gun	35	40	10	2296,-		D
			8x18	93	Image Star FF L.Gun	43	40	-6	2936,-	**OE-fit**	B,C,D
			8x18	94	Image Star FF Slv	43	40	-6	2936,-	**OE-fit**	B,C,D
			8x18	95	Image Star FF G.Blk/Pol	43	40	-6	3076,-	**OE-fit**	B,C,D
			8,5x18	16	Advanti Inizio DST	35	40	10	3828,-		D
			8,5x18	24	ATS Mizar	34	40	12	3016,-		C,D
			8,5x18	25	ATS Mizar G.Blk	34	40	12	3116,-		C,D
			9x18	16	Advanti Inizio DST	45	53	16	3828,-	Kun bak	D
			9x18	93	Image Star FF L.Gun	53	53	0	2936,-	**OE-fit**, kun bak	B,C,D
			9x18	94	Image Star FF Slv	53	53	0	2936,-	**OE-fit**, kun bak	B,C,D
			9x18	95	Image Star FF G.Blk/Pol	53	53	0	3076,-	**OE-fit**, kun bak	B,C,D
			8x19	2	Nitro Sapphire FF	39	40	2	4684,-		D
			8x19	10	Nitro Demon H.Slv	40	40	0	3624,-		D
			8x19	16	Advanti Inizio DST	35	40	10	4412,-		D
			8x19	24	ATS Mizar	43	40	-6	3720,-	**OE-fit**	B,C,D
			8x19	25	ATS Mizar G.Blk	43	40	-6	3868,-	**OE-fit**	B,C,D
			8x19	48	Image Motion	35	40	10	2532,-		D
			8x19	49	Image Motion G.Gun	35	40	10	2532,-		D
			8,5x19	2	Nitro Sapphire FF	40	40	0	4684,-		D
			8,5x19	3	Nitro Turismo FF	35	40	10	4492,-		D

Forts. neste side »

Bilmerke - Bilmodell	Årsmodell	Dimensjon	Felgdim.	Bilde	Felgmodell	ET Felg	ET Bil	Avvik ET	Veil. Pris eks. MVA	Merknader	B,C D, M
MERCEDES (forts.)			PCD: **5-112** Bolt - Mutter: **14x1,50B**			CB: **66,5**					
			8,5x19	4	Nitro Turismo FF G.Gun/Pol	35	40	10	4644,-		D
			8,5x19	5	Nitro Volcano G.Gun	40	40	0	4388,-		D
			8,5x19	6	Nitro Volcano	40	40	0	4632,-		D
			8,5x19	9	Nitro Sabre G.Blk	35	40	10	4292,-		D
			8,5x19	16	Advanti Inizio DST	35	40	10	4412,-		D
			8,5x19	24	ATS Mizar	34	40	12	4176,-		C,D
			8,5x19	25	ATS Mizar G.Blk	34	40	12	4116,-		C,D
			8,5x19	36	Image Colt	35	40	10	3028,-		D
			8,5x19	92	Image Colt L.Gun	35	40	10	2876,-		D
			9x19	10	Nitro Demon H.Slv	45	53	16	3624,-	Kun bak	D
			9x19	11	Nitro Demon	45	53	16	3376,-	Kun bak	D
			9,5x19	3	Nitro Turismo FF	50	53	6	4660,-	Kun bak	D
			9,5x19	4	Nitro Turismo FF G.Gun/Pol	50	53	6	4812,-	Kun bak	D
			9,5x19	5	Nitro Volcano G.Gun	50	53	6	4388,-	Kun bak	D
			9,5x19	6	Nitro Volcano	50	53	6	4632,-	Kun bak	D
			9,5x19	16	Advanti Inizio DST	45	53	16	4412,-	Kun bak	D
			10x19	3	Nitro Turismo FF	50	53	6	4812,-	Kun bak	D
			10x19	4	Nitro Turismo FF G.Gun/Pol	50	53	6	4964,-	Kun bak	D
			8,5x20	2	Nitro Sapphire FF	40	40	0	5216,-		D
			8,5x20	3	Nitro Turismo FF	35	40	10	4812,-		D
			8,5x20	4	Nitro Turismo FF G.Gun/Pol	35	40	10	4964,-		D
			8,5x20	7	Nitro Spark G.Blk/Grey	35	40	10	4660,-		D
			8,5x20	9	Nitro Sabre G.Blk	35	40	10	4800,-		D
			8,5x20	10	Nitro Demon H.Slv	38	40	4	4104,-		D
			8,5x20	11	Nitro Demon	38	40	4	3808,-		D
			8,5x20	24	ATS Mizar	40	40	0	5948,-	**OE-fit**	B,C,D
			8,5x20	25	ATS Mizar G.Blk	40	40	0	6020,-	**OE-fit**	B,C,D
			8,5x20	36	Image Colt	35	40	10	3432,-		D
			8,5x20	92	Image Colt L.Gun	35	40	10	3276,-		D
			9x20	5	Nitro Volcano G.Gun	40	40	0	4824,-		D
			9x20	6	Nitro Volcano	40	40	0	5164,-		D
			9x20	10	Nitro Demon H.Slv	40	40	0	4104,-		D
			9x20	11	Nitro Demon	40	40	0	3808,-		D
			9x20	15	Nitro Magnum	40	40	0	4572,-		D
			9,5x20	5	Nitro Volcano G.Gun	50	53	6	4824,-	Kun bak	D
			9,5x20	6	Nitro Volcano	50	53	6	5164,-	Kun bak	D
			9,5x20	10	Nitro Demon H.Slv	45	53	16	4104,-	Kun bak	D
			9,5x20	11	Nitro Demon	45	53	16	3808,-	Kun bak	D
			10x20	3	Nitro Turismo FF	50	53	6	5116,-	Kun bak	D
			10x20	4	Nitro Turismo FF G.Gun/Pol	50	53	6	5288,-	Kun bak	D
			10,5x20	5	Nitro Volcano G.Gun	42	53	22	4824,-	Kun bak	D,M
			10,5x20	6	Nitro Volcano	42	53	22	5164,-	Kun bak	D,M
			9x21	5	Nitro Volcano G.Gun	40	40	0	5540,-		D
			9x21	6	Nitro Volcano	40	40	0	5996,-		D
			9x21	24	ATS Mizar	37	40	6	8276,-	**OE-fit**	B,C,D
			9x21	25	ATS Mizar G.Blk	37	40	6	8352,-	**OE-fit**	B,C,D
			10,5x21	5	Nitro Volcano G.Gun	42	53	22	5540,-	Kun bak	D,M
			10,5x21	6	Nitro Volcano	42	53	22	5996,-	Kun bak	D,M
MERCEDES			PCD: **5-112** Bolt - Mutter: **14x1,50B**			CB: **66,5**					
E-Class (S213) E300de t-modell	01.19-	18-18	8x18	93	Image Star FF L.Gun	43	43	0	2936,-	**OE-fit**	B,C,D
E-Class (W213) E300de sedan	01.19-	18-18	8x18	94	Image Star FF Slv	43	43	0	2936,-	**OE-fit**	B,C,D
			8x18	95	Image Star FF G.Blk/Pol	43	43	0	3076,-	**OE-fit**	B,C,D
			9x18	93	Image Star FF L.Gun	53	53	-1	2936,-	**OE-fit**, kun bak	B,C,D
			9x18	94	Image Star FF Slv	53	53	-1	2936,-	**OE-fit**, kun bak	B,C,D
			9x18	95	Image Star FF G.Blk/Pol	53	53	-1	3076,-	**OE-fit**, kun bak	B,C,D
MERCEDES			PCD: **5-112** Bolt - Mutter: **14x1,50 B**			CB: **66,5**					
E-Class (A238) 53 AMG cab	08.18-	19-21	8x19	3	Nitro Turismo FF	18	20	4	4492,-		D
E-Class (C238) 53 AMG coupe	08.18-	19-21	8x19	4	Nitro Turismo FF G.Gun/Pol	18	20	4	4644,-		D
E-Class (S213) 43 AMG t-modell	06.16-03.18	19-21	8,5x19	5	Nitro Volcano G.Gun	25	20	-10	4388,-		D
E-Class (S213) 53 AMG t-modell	04.18-	19-21	8,5x19	6	Nitro Volcano	25	20	-10	4632,-		D
E-Class (W213) 43 AMG sedan	06.16-03.18	19-21	9x19	3	Nitro Turismo FF	45	49	8	4660,-	Kun bak	D
E-Class (W213) 53 AMG sedan	04.18-	19-21	9x19	4	Nitro Turismo FF G.Gun/Pol	45	49	8	4812,-	Kun bak	D
			9x19	11	Nitro Demon	45	49	8	3376,-	Kun bak	D
			9,5x19	3	Nitro Turismo FF	50	49	-2	4660,-	Kun bak	D
			9,5x19	4	Nitro Turismo FF G.Gun/Pol	50	49	-2	4812,-	Kun bak	D
			9,5x19	5	Nitro Volcano G.Gun	50	49	-2	4388,-	Kun bak	D
			9,5x19	6	Nitro Volcano	50	49	-2	4632,-	Kun bak	D
			8,5x20	11	Nitro Demon	25	20	-10	3808,-		D
			9x20	5	Nitro Volcano G.Gun	25	20	-10	4824,-		D
			9x20	6	Nitro Volcano	25	20	-10	5164,-		D
			9,5x20	5	Nitro Volcano G.Gun	50	49	-2	4824,-	Kun bak	D
			9,5x20	6	Nitro Volcano	50	49	-2	5164,-	Kun bak	D
			9,5x20	11	Nitro Demon	45	49	8	3808,-	Kun bak	D
			10,5x20	5	Nitro Volcano G.Gun	42	49	14	4824,-	Kun bak	D,M
			10,5x20	6	Nitro Volcano	42	49	14	5164,-	Kun bak	D,M
			9x21	5	Nitro Volcano G.Gun	25	20	-10	5540,-		D
			9x21	6	Nitro Volcano	25	20	-10	5996,-		D
			10,5x21	5	Nitro Volcano G.Gun	42	49	14	5540,-	Kun bak	D,M
			10,5x21	6	Nitro Volcano	42	49	14	5996,-	Kun bak	D,M
MERCEDES			PCD: **5-112** Bolt - Mutter: **14x1,50B**			CB: **66,5**					
E-Class (S213) 63 AMG t-modell	01.17-	19-21	9x19	11	Nitro Demon	28	25	-6	3376,-		D
AMG S 20"			9,5x19	3	Nitro Turismo FF	25	25	0	4660,-		D
E-Class (W213) 63 AMG sedan	01.17-	19-21	9,5x19	4	Nitro Turismo FF G.Gun/Pol	25	25	0	4812,-		D
AMG S 20"			10x19	3	Nitro Turismo FF	50	55	10	4812,-	Kun bak	D
			10x19	4	Nitro Turismo FF G.Gun/Pol	50	55	10	4964,-	Kun bak	D

Forts. neste side »

Bilmerke - Bilmodell	Årsmodell	Dimensjon	Felgdim.	Bilde	Felgmodell	ET Felg	ET Bil	Avvik ET	Veil. Pris eks. MVA	Merknader	B,C D, M
MERCEDES (forts.)				PCD: **5-112** Bolt - Mutter: **14x1,50B**		CB: **66,5**					
			9x20	12	Nitro Edge M.Blk	25	25	0	4220,-		D
			9,5x20	3	Nitro Turismo FF	25	25	0	4960,-		D
			9,5x20	4	Nitro Turismo FF G.Gun/Pol	25	25	0	5048,-		D
			10x20	3	Nitro Turismo FF	50	55	10	5116,-	Kun bak	D
			10x20	4	Nitro Turismo FF G.Gun/Pol	50	55	10	5288,-	Kun bak	D
			10x20	12	Nitro Edge M.Blk	50	55	10	4220,-	Kun bak	D
MERCEDES				PCD: **5-112** Bolt - Mutter: **14x1,50B**		CB: **66,5**					
E-Class (S213) All-Terrain	02.17-	19-22	8x19	2	Nitro Sapphire FF	39	38	-2	4684,-		D
			8x19	11	Nitro Demon	35	38	6	3376,-		D
			8x19	16	Advanti Inizio DST	35	38	6	4412,-		D
			8x19	24	ATS Mizar	38	38	0	3720,-	**OE-fit**	B,C,D
			8x19	25	ATS Mizar G.Blk	38	38	0	3868,-	**OE-fit**	B,C,D
			8x19	48	Image Motion	35	38	6	2532,-		D
			8x19	49	Image Motion G.Gun	35	38	6	2532,-		D
			8,5x19	2	Nitro Sapphire FF	40	38	-4	4684,-		D
			8,5x19	3	Nitro Turismo FF	35	38	6	4492,-		D
			8,5x19	4	Nitro Turismo FF G.Gun/Pol	35	38	6	4644,-		D
			8,5x19	5	Nitro Volcano G.Gun	40	38	-4	4388,-		D
			8,5x19	6	Nitro Volcano	40	38	-4	4632,-		D
			8,5x19	9	Nitro Sabre G.Blk	35	38	6	4292,-		D
			8,5x19	16	Advanti Inizio DST	35	38	6	4412,-		D
			8,5x19	36	Image Colt	35	38	6	3028,-		D
			8,5x19	92	Image Colt L.Gun	35	38	6	2876,-		D
			9,5x19	3	Nitro Turismo FF	50	50	0	4660,-	Kun bak	D
			9,5x19	4	Nitro Turismo FF G.Gun/Pol	50	50	0	4812,-	Kun bak	D
			9,5x19	16	Advanti Inizio DST	45	50	10	4412,-	Kun bak	D
			8,5x20	2	Nitro Sapphire FF	40	38	-4	5216,-		D
			8,5x20	3	Nitro Turismo FF	35	38	6	4812,-		D
			8,5x20	4	Nitro Turismo FF G.Gun/Pol	35	38	6	4964,-		D
			8,5x20	7	Nitro Spark G.Blk/Grey	35	38	6	4660,-		D
			8,5x20	9	Nitro Sabre G.Blk	35	38	6	4800,-		D
			8,5x20	10	Nitro Demon H.Slv	38	38	0	4104,-		D
			8,5x20	11	Nitro Demon	38	38	0	3808,-		D
			8,5x20	24	ATS Mizar	40	38	-4	5948,-	**OE-fit**	B,C,D
			8,5x20	25	ATS Mizar G.Blk	40	38	-4	6020,-	**OE-fit**	B,C,D
			8,5x20	36	Image Colt	35	38	6	3432,-		D
			8,5x20	92	Image Colt L.Gun	35	38	6	3276,-		D
			9x20	6	Nitro Volcano	40	38	-4	5164,-		D
			9x20	10	Nitro Demon H.Slv	40	38	-4	4104,-		D
			9x20	11	Nitro Demon	40	38	-4	3808,-		D
			9x20	15	Nitro Magnum	35	38	6	4572,-		D
			9,5x20	5	Nitro Volcano G.Gun	50	50	0	4824,-	Kun bak	D
			9,5x20	6	Nitro Volcano	50	50	0	5164,-	Kun bak	D
			9,5x20	10	Nitro Demon H.Slv	45	50	10	4104,-	Kun bak	D
			9,5x20	11	Nitro Demon	45	50	10	3808,-	Kun bak	D
			10x20	3	Nitro Turismo FF	50	50	0	5116,-	Kun bak	D
			10x20	4	Nitro Turismo FF G.Gun/Pol	50	50	0	5288,-	Kun bak	D
			9x21	5	Nitro Volcano G.Gun	40	38	-4	5540,-		D
			9x21	6	Nitro Volcano	40	38	-4	5996,-		D
			9x21	24	ATS Mizar	37	38	2	8276,-	**OE-fit**	B,C,D
			9x21	25	ATS Mizar G.Blk	37	38	2	8352,-	**OE-fit**	B,C,D
			9x22	15	Nitro Magnum	35	38	6	5420,-		D
MERCEDES				PCD: **5-112** Bolt - Mutter: **14x1,50B**		CB: **66,6**					
CLS (W219)	10.04-08.10	17-20	7,5x17	46	Image Stella	27	28	2	1812,-		D
CLS500 06- 18"			7,5x17	47	Image Stella M.Blk	27	28	2	1812,-		D
CLS (W219) 55 AMG	10.04-06.06	18-22	8x17	17	BM Drive M.Gun	25	28	6	1736,-		D
CLS (W219) 63 AMG	07.06-08.10	18-22	8x18	17	BM Drive M.Gun	25	28	6	2296,-		D
			8x18	46	Image Stella	30	28	-4	2276,-		D
			8x18	47	Image Stella M.Blk	30	28	-4	2276,-		D
			9x19	11	Nitro Demon	28	28	0	3376,-		D
			8,5x20	11	Nitro Demon	25	28	6	3808,-		D
MERCEDES				PCD: **5-112** Bolt - Mutter: **14x1,50B**		CB: **66,6**					
CLS (W218)	09.10-02.18	17-21	7,5x17	46	Image Stella	27	35	15	1812,-		D
CLS500 18"			7,5x17	47	Image Stella M.Blk	27	35	15	1812,-		D
CLS (X218) shooting break	08.12-06.18	17-21	8x18	2	Nitro Sapphire FF	30	35	9	4036,-		D
CLS500 18"			8x18	16	Advanti Inizio DST	30	35	9	3828,-		D
			8x18	17	BM Drive M.Gun	25	35	19	2296,-		D
			8x18	26	CSP 18 G.Blk/pol	30	35	9	2956,-		D
			8x18	27	CSP 18	30	35	9	2972,-		D
			8x18	28	CSP 18 G.Blk	30	35	9	2972,-		D
			8x18	46	Image Stella	30	35	9	2276,-		D
			8x18	47	Image Stella M.Blk	30	35	9	2276,-		D
			8x18	50	Image Legend	25	35	19	2276,-		D
			8,5x18	24	ATS Mizar	34	35	1	3016,-	**OE-fit**	B,C,D
			8,5x18	25	ATS Mizar G.Blk	34	35	1	3116,-	**OE-fit**	B,C,D
			9x18	16	Advanti Inizio DST	40	48	16	3828,-	Kun bak	D
			8x19	2	Nitro Sapphire FF	30	35	9	4684,-		D
			8x19	3	Nitro Turismo FF	30	35	9	4492,-		D
			8x19	4	Nitro Turismo FF G.Gun/Pol	30	35	9	4644,-		D
			8x19	16	Advanti Inizio DST	30	35	9	4412,-		D
			8x19	26	CSP 18 G.Blk/pol	30	35	9	3596,-		D
			8x19	27	CSP 18	30	35	9	3444,-		D
			8x19	28	CSP 18 G.Blk	30	35	9	3444,-		D
			8,5x19	5	Nitro Volcano G.Gun	25	35	19	4388,-		D
			8,5x19	6	Nitro Volcano	25	35	19	4632,-		D

Forts. neste side »

Bilmerke - Bilmodell	Årsmodell	Dimensjon	Felgdim.	Bilde	Felgmodell	ET Felg	ET Bil	Avvik ET	Veil. Pris eks. MVA	Merknader	B,C D, M
MERCEDES (forts.)			PCD: **5-112** Bolt - Mutter: **14x1,50B** CB: **66,6**								
			8,5x19	24	ATS Mizar	34	35	1	4176,-	**OE-fit**	B,C,D
			8,5x19	25	ATS Mizar G.Blk	34	35	1	4116,-	**OE-fit**	B,C,D
			9x19	11	Nitro Demon	28	35	13	3376,-		D
			9,5x19	3	Nitro Turismo FF	40	48	16	4660,-	Kun bak	D
			9,5x19	4	Nitro Turismo FF G.Gun/Pol	40	48	16	4812,-	Kun bak	D
			9,5x19	6	Nitro Volcano	40	48	16	4632,-	Kun bak	D
			9,5x19	16	Advanti Inizio DST	40	48	16	4412,-	Kun bak	D
			8,5x20	2	Nitro Sapphire FF	30	35	9	5216,-		D
			8,5x20	11	Nitro Demon	25	35	19	3808,-		D
			9x20	3	Nitro Turismo FF	30	35	9	4960,-		D
			9x20	4	Nitro Turismo FF G.Gun/Pol	30	35	9	5048,-		D
			9x20	5	Nitro Volcano G.Gun	25	35	19	4824,-		D
			9x20	6	Nitro Volcano	25	35	19	5164,-		D
			9x20	10	Nitro Demon H.Slv	30	35	9	4104,-		D
			9x20	11	Nitro Demon	30	35	9	3808,-		D
			9x20	15	Nitro Magnum	28	35	13	4572,-		D
			9,5x20	10	Nitro Demon H.Slv	45	48	6	4104,-	Kun bak	D
			9,5x20	11	Nitro Demon	45	48	6	3808,-	Kun bak	D
			10,5x20	3	Nitro Turismo FF	40	48	16	5116,-	Kun bak	D,M
			10,5x20	4	Nitro Turismo FF G.Gun/Pol	40	48	16	5288,-	Kun bak	D,M
			10,5x20	5	Nitro Volcano G.Gun	42	48	12	4824,-	Kun bak	D,M
			10,5x20	6	Nitro Volcano	42	48	12	5164,-	Kun bak	D,M
			9x21	5	Nitro Volcano G.Gun	25	35	19	5540,-		D
			9x21	6	Nitro Volcano	25	35	19	5996,-		D
			10,5x21	5	Nitro Volcano G.Gun	42	48	12	5540,-	Kun bak	D,M
			10,5x21	6	Nitro Volcano	42	48	12	5996,-	Kun bak	D,M
MERCEDES			PCD: **5-112** Bolt - Mutter: **14x1,50B** CB: **66,5**								
CLS (C257)	03.18-	18-21	8x18	10	Nitro Demon H.Slv	30	33	6	2972,-		D
CLS53 AMG 19"			8x18	17	BM Drive M.Gun	25	33	16	2296,-		D
			8x18	26	CSP 18 G.Blk/pol	30	33	6	2956,-		D
			8x18	27	CSP 18	30	33	6	2972,-		D
			8x18	28	CSP 18 G.Blk	30	33	6	2972,-		D
			8x18	46	Image Stella	30	33	6	2276,-		D
			8x18	47	Image Stella M.Blk	30	33	6	2276,-		D
			8x18	50	Image Legend	25	33	16	2276,-		D
			8,5x18	2	Nitro Sapphire FF	27	33	12	4036,-		D
			8x19	3	Nitro Turismo FF	30	33	6	4492,-		D
			8x19	4	Nitro Turismo FF G.Gun/Pol	30	33	6	4644,-		D
			8x19	10	Nitro Demon H.Slv	30	33	6	3624,-		D
			8x19	26	CSP 18 G.Blk/pol	30	33	6	3596,-		D
			8x19	27	CSP 18	30	33	6	3444,-		D
			8x19	28	CSP 18 G.Blk	30	33	6	3444,-		D
			8,5x19	2	Nitro Sapphire FF	27	33	12	4684,-		D
			8,5x19	5	Nitro Volcano G.Gun	25	33	16	4388,-		D
			8,5x19	6	Nitro Volcano	25	33	16	4632,-		D
			9x19	3	Nitro Turismo FF	20	28	16	4660,-	Kun bak	D
			9x19	4	Nitro Turismo FF G.Gun/Pol	20	28	16	4812,-	Kun bak	D
			9x19	10	Nitro Demon H.Slv	28	28	0	3624,-	Kun bak	D
			9x19	11	Nitro Demon	28	28	0	3376,-	Kun bak	D
			9,5x19	3	Nitro Turismo FF	25	28	6	4660,-	Kun bak	D
			9,5x19	4	Nitro Turismo FF G.Gun/Pol	25	28	6	4812,-	Kun bak	D
			9,5x19	5	Nitro Volcano G.Gun	25	28	6	4388,-	Kun bak	D
			9,5x19	6	Nitro Volcano	25	28	6	4632,-	Kun bak	D
			8,5x20	11	Nitro Demon	25	33	16	3808,-		D
			9x20	3	Nitro Turismo FF	30	33	6	4960,-		D
			9x20	4	Nitro Turismo FF G.Gun/Pol	30	33	6	5048,-		D
			9,5x20	3	Nitro Turismo FF	25	28	6	4960,-	Kun bak	D
			9,5x20	4	Nitro Turismo FF G.Gun/Pol	25	28	6	5048,-	Kun bak	D
			9,5x20	10	Nitro Demon H.Slv	30	28	-4	4104,-	Kun bak	D
			9,5x20	11	Nitro Demon	30	28	-4	3808,-	Kun bak	D
			10x20	3	Nitro Turismo FF	25	28	6	5116,-	Kun bak	D
			10x20	4	Nitro Turismo FF G.Gun/Pol	25	28	6	5288,-	Kun bak	D
MERCEDES			PCD: **5-112** Bolt - Mutter: **14x1,50B** CB: **66,6**								
CLS (W218) 63 AMG	01.11-02.18	19-21	9x19	11	Nitro Demon	28	37	18	3376,-		D
CLS (X218) 63 AMG shoting break	10.12-06.18	19-21	9x20	3	Nitro Turismo FF	30	37	14	4960,-		D
			9x20	4	Nitro Turismo FF G.Gun/Pol	30	37	14	5048,-		D
			9x20	10	Nitro Demon H.Slv	30	37	14	4104,-		D
			9x20	11	Nitro Demon	30	37	14	3808,-		D
			10x20	3	Nitro Turismo FF	50	52	4	5116,-	Kun bak	D
			10x20	4	Nitro Turismo FF G.Gun/Pol	50	52	4	5288,-	Kun bak	D
			10,5x20	3	Nitro Turismo FF	40	52	24	5116,-	Kun bak	D,M
			10,5x20	4	Nitro Turismo FF G.Gun/Pol	40	52	24	5288,-	Kun bak	D,M
MERCEDES			PCD: **5-112** Bolt - Mutter: **12x1,50B** CB: **66,6**								
190 (W201)	01.85-05.93	15-18	7x16	40	Image Spirit	35	49	28	1264,-		D
E-Class (W124)	01.85-05.95	15-19	7x16	50	Image Legend	35	49	28	1544,-		D
E-Class (W124) coupe	04.87-05.93	15-19	7,5x17	46	Image Stella	35	49	28	1812,-		D
E-Class (W124) t-modell	10.85-04.96	15-19	7,5x17	47	Image Stella M.Blk	35	49	28	1812,-		D
			7,5x17	50	Image Legend	35	49	28	1812,-		D
			8x17	17	BM Drive M.Gun	35	49	28	1736,-		D,M
			8x18	46	Image Stella	35	49	28	2276,-		D,M
			8x18	47	Image Stella M.Blk	35	49	28	2276,-		M
			8x18	50	Image Legend	35	49	28	2276,-		D,M

Bilmerke - Bilmodell	Årsmodell	Dimensjon	Felgdim.	Bilde	Felgmodell	ET Felg	ET Bil	Avvik ET	Veil. Pris eks. MVA	Merknader	B,C D, M
MERCEDES				PCD: **5-112** Bolt - Mutter: **14x1,50B**		CB: **66,6**					
SL (R230)	11.01-02.08	17-21	8x18	46	Image Stella	30	35	10	2276,-		D
SL55 AMG 18"			8x18	47	Image Stella M.Blk	30	35	10	2276,-		D
SL600, SL65 AMG 19"			8,5x18	24	ATS Mizar	34	35	2	3016,-	**OE-fit**	B,C,D
SL (R230) Facelift	03.08-12.11	17-21	8,5x18	25	ATS Mizar G.Blk	34	35	2	3116,-	**OE-fit**	B,C,D
SL500, SL600 18"			8,5x19	5	Nitro Volcano G.Gun	25	35	20	4388,-		D
SL63 AMG, SL65 AMG 19"			8,5x19	6	Nitro Volcano	25	35	20	4632,-		D
			8,5x19	24	ATS Mizar	34	35	2	4176,-	**OE-fit**	B,C,D
			8,5x19	25	ATS Mizar G.Blk	34	35	2	4116,-	**OE-fit**	B,C,D
			9x19	10	Nitro Demon H.Slv	28	35	14	3624,-		D
			9x19	11	Nitro Demon	28	35	14	3376,-		D
			9,5x19	5	Nitro Volcano G.Gun	25	35	20	4388,-	Kun bak	D
			9,5x19	6	Nitro Volcano	25	35	20	4632,-	Kun bak	D
			8,5x20	24	ATS Mizar	29	35	12	5948,-		C,D
			8,5x20	25	ATS Mizar G.Blk	29	35	12	6020,-		C,D
			9x20	5	Nitro Volcano G.Gun	25	35	20	4824,-		D
			9x20	6	Nitro Volcano	25	35	20	5164,-		D
			9x20	10	Nitro Demon H.Slv	30	35	10	4104,-		D
			9x20	11	Nitro Demon	30	35	10	3808,-		D
			9,5x20	10	Nitro Demon H.Slv	30	35	10	4104,-	Kun bak	D
			9,5x20	11	Nitro Demon	30	35	10	3808,-	Kun bak	D
			10,5x20	5	Nitro Volcano G.Gun	30	35	10	4824,-	Kun bak	D,M
			10,5x20	6	Nitro Volcano	30	35	10	5164,-	Kun bak	D,M
			9x21	5	Nitro Volcano G.Gun	25	35	20	5540,-		D
			9x21	6	Nitro Volcano	25	35	20	5996,-		D
			10,5x21	5	Nitro Volcano G.Gun	30	35	10	5540,-	Kun bak	D,M
			10,5x21	6	Nitro Volcano	30	35	10	5996,-	Kun bak	D,M
MERCEDES				PCD: **5-112** Bolt - Mutter: **14x1,50B**		CB: **66,6**					
SL (R231)	01.12-	17-21	8x18	46	Image Stella	30	36	11	2276,-		D
SL500 18"			8x18	47	Image Stella M.Blk	30	36	11	2276,-		D
			8,5x18	24	ATS Mizar	34	36	3	3016,-	**OE-fit**	B,C,D
			8,5x18	25	ATS Mizar G.Blk	34	36	3	3116,-	**OE-fit**	B,C,D
			8,5x19	5	Nitro Volcano G.Gun	25	36	21	4388,-		D
			8,5x19	6	Nitro Volcano	25	36	21	4632,-		D
			8,5x19	24	ATS Mizar	34	36	3	4176,-	**OE-fit**	B,C,D
			8,5x19	25	ATS Mizar G.Blk	34	36	3	4116,-	**OE-fit**	B,C,D
			9x19	10	Nitro Demon H.Slv	28	36	15	3624,-		D
			9x19	11	Nitro Demon	28	36	15	3376,-		D
			9,5x19	5	Nitro Volcano G.Gun	40	48	15	4388,-	Kun bak	D
			9,5x19	6	Nitro Volcano	40	48	15	4632,-	Kun bak	D
			8,5x20	24	ATS Mizar	29	36	13	5948,-		C,D
			8,5x20	25	ATS Mizar G.Blk	29	36	13	6020,-		C,D
			9x20	3	Nitro Turismo FF	30	36	11	4960,-		D
			9x20	4	Nitro Turismo FF G.Gun/Pol	30	36	11	5048,-		D
			9x20	5	Nitro Volcano G.Gun	25	36	21	4824,-		D
			9x20	6	Nitro Volcano	25	36	21	5164,-		D
			9x20	10	Nitro Demon H.Slv	30	36	11	4104,-		D
			9x20	11	Nitro Demon	30	36	11	3808,-		D
			9,5x20	10	Nitro Demon H.Slv	45	48	5	4104,-	Kun bak	D
			9,5x20	11	Nitro Demon	45	48	5	3808,-	Kun bak	D
			10,5x20	3	Nitro Turismo FF	40	48	15	5116,-	Kun bak	D,M
			10,5x20	4	Nitro Turismo FF G.Gun/Pol	40	48	15	5288,-	Kun bak	D,M
			10,5x20	5	Nitro Volcano G.Gun	42	48	11	4824,-	Kun bak	D
			10,5x20	6	Nitro Volcano	42	48	11	5164,-	Kun bak	D
			9x21	5	Nitro Volcano G.Gun	25	36	21	5540,-		D
			9x21	6	Nitro Volcano	25	36	21	5996,-		D
			10,5x21	5	Nitro Volcano G.Gun	42	48	11	5540,-	Kun bak	D
			10,5x21	6	Nitro Volcano	42	48	11	5996,-	Kun bak	D
MERCEDES				PCD: **5-112** Bolt - Mutter: **14x1,50B**		CB: **66,6**					
SL (R231) SL63 AMG	06.12-	19-21	9,5x20	3	Nitro Turismo FF	25	27	4	4960,-		D
SL65 AMG			9,5x20	4	Nitro Turismo FF G.Gun/Pol	25	27	4	5048,-		D
			10,5x20	3	Nitro Turismo FF	40	48	16	5116,-	Kun bak	D
			10,5x20	4	Nitro Turismo FF G.Gun/Pol	40	48	16	5288,-	Kun bak	D
MERCEDES				PCD: **5-112** Bolt - Mutter: **14x1,50B**		CB: **66,5**					
AMG GT (X290) 4-door coupe	09.18-	19-22	9,5x20	3	Nitro Turismo FF	25	26	1	4960,-		D
AMG GT 63 S 20"			9,5x20	4	Nitro Turismo FF G.Gun/Pol	25	26	1	5048,-		D
			11x20	3	Nitro Turismo FF	20	20	0	5296,-	Kun bak	D
			11x20	4	Nitro Turismo FF G.Gun/Pol	20	20	0	5416,-	Kun bak	D
MERCEDES				PCD: **5-112** Bolt - Mutter: **14x1,50B**		CB: **66,6**					
CL-Coupe (W215) CL500	09.99-10.06	17-21	7,5x17	36	Image Colt	35	46	22	1956,-		D
CL600 99-02 17"			7,5x17	46	Image Stella	35	46	22	1812,-		D
CL600 Biturbo 03-05 19"			7,5x17	47	Image Stella M.Blk	35	46	22	1812,-		D
CL-Coupe (W215) CL55 AMG	09.99-10.06	18-21	7,5x17	92	Image Colt L.Gun	35	46	22	1876,-		D
CL55 AMG komp. 03-05 19"			8x17	9	Nitro Sabre G.Blk	35	46	22	3108,-		D
CL65 AMG 04-05 19"			8x18	7	Nitro Spark G.Blk/Grey	35	46	22	3476,-		C,D
S-Class (W140)	03.91-08.98	16-20	8x18	9	Nitro Sabre G.Blk	35	46	22	3496,-		D
(orig. Et 51)			8x18	10	Nitro Demon H.Slv	35	46	22	2972,-		D
S-Class (W220)	09.98-10.05	16-21	8x18	11	Nitro Demon	35	46	22	2784,-		D
S600 99-03 17"			8x18	36	Image Colt	35	46	22	2412,-		D
S600 Biturbo 03-05 19"			8x18	46	Image Stella	35	46	22	2276,-		D
S-Class (W220) S55 AMG	99-02	18-21	8x18	47	Image Stella M.Blk	35	46	22	2276,-		
S55 AMG komp. 03-05 19"			8x18	50	Image Legend	35	46	22	2276,-		D
S65 AMG 04-05 19"			8x18	92	Image Colt L.Gun	35	46	22	2296,-		D
			8,5x18	24	ATS Mizar	34	46	24	3016,-		C,D
			8,5x18	25	ATS Mizar G.Blk	34	46	24	3116,-		C,D
			8x19	10	Nitro Demon H.Slv	35	46	22	3624,-		D

Forts. neste side »

Bilmerke - Bilmodell	Årsmodell	Dimensjon	Felgdim.	Bilde	Felgmodell	ET Felg	ET Bil	Avvik ET	Veil. Pris eks. MVA	Merknader	B,C D, M
MERCEDES (forts.)			PCD: **5-112** Bolt - Mutter: **14x1,50B**			CB: **66,6**					
			8x19	11	Nitro Demon	35	46	22	3376,-		D
			8,5x19	3	Nitro Turismo FF	35	46	22	4492,-		D
			8,5x19	4	Nitro Turismo FF G.Gun/Pol	35	46	22	4644,-		D
			8,5x19	9	Nitro Sabre G.Blk	35	46	22	4292,-		D
			8,5x19	24	ATS Mizar	34	46	24	4176,-		C,D
			8,5x19	25	ATS Mizar G.Blk	34	46	24	4116,-		C,D
			9,5x19	3	Nitro Turismo FF	40	46	12	4660,-	Kun bak	D
			9,5x19	4	Nitro Turismo FF G.Gun/Pol	40	46	12	4812,-	Kun bak	D
			8,5x20	3	Nitro Turismo FF	35	46	22	4812,-		D
			8,5x20	4	Nitro Turismo FF G.Gun/Pol	35	46	22	4964,-		D
			8,5x20	7	Nitro Spark G.Blk/Grey	35	46	22	4660,-		D
			8,5x20	9	Nitro Sabre G.Blk	35	46	22	4800,-		D
MERCEDES			PCD: **5-112** Bolt - Mutter: **14x1,50B**			CB: **66,6**					
CL-Coupe (W216)	10.06-03.14	17-22	7,5x17	36	Image Colt	35	43	16	1956,-		D
CL600 18"			7,5x17	46	Image Stella	35	43	16	1812,-		D
S-Class (W221)	10.05-04.13	17-22	7,5x17	47	Image Stella M.Blk	35	43	16	1812,-		D
S600 18"			7,5x17	92	Image Colt L.Gun	35	43	16	1876,-		D
			8x17	9	Nitro Sabre G.Blk	35	43	16	3108,-		D
			8x18	2	Nitro Sapphire FF	39	43	8	4036,-		D
			8x18	7	Nitro Spark G.Blk/Grey	35	43	16	3476,-		C,D
			8x18	9	Nitro Sabre G.Blk	35	43	16	3496,-		D
			8x18	10	Nitro Demon H.Slv	35	43	16	2972,-		D
			8x18	11	Nitro Demon	35	43	16	2784,-		D
			8x18	17	BM Drive M.Gun	35	43	16	2296,-		D
			8x18	36	Image Colt	35	43	16	2412,-		D
			8x18	46	Image Stella	35	43	16	2276,-		D
			8x18	47	Image Stella M.Blk	35	43	16	2276,-		
			8x18	50	Image Legend	35	43	16	2276,-		D
			8x18	92	Image Colt L.Gun	35	43	16	2296,-		D
			8,5x18	24	ATS Mizar	34	43	18	3016,-		C,D
			8,5x18	25	ATS Mizar G.Blk	34	43	18	3116,-		C,D
			8x19	2	Nitro Sapphire FF	39	43	8	4684,-		D
			8x19	10	Nitro Demon H.Slv	35	43	16	3624,-		D
			8x19	11	Nitro Demon	35	43	16	3376,-		D
			8,5x19	2	Nitro Sapphire FF	40	43	6	4684,-		D
			8,5x19	3	Nitro Turismo FF	35	43	16	4492,-		D
			8,5x19	4	Nitro Turismo FF G.Gun/Pol	35	43	16	4644,-		D
			8,5x19	5	Nitro Volcano G.Gun	32	43	22	4388,-		D
			8,5x19	6	Nitro Volcano	32	43	22	4632,-		D
			8,5x19	9	Nitro Sabre G.Blk	35	43	16	4292,-		D
			8,5x19	24	ATS Mizar	34	43	18	4176,-		C,D
			8,5x19	25	ATS Mizar G.Blk	34	43	18	4116,-		C,D
			8,5x19	36	Image Colt	35	43	16	3028,-		D
			8,5x19	92	Image Colt L.Gun	35	43	16	2876,-		D
			9,5x19	3	Nitro Turismo FF	40	43	6	4660,-	Kun bak	D
			9,5x19	4	Nitro Turismo FF G.Gun/Pol	40	43	6	4812,-	Kun bak	D
			9,5x19	5	Nitro Volcano G.Gun	40	43	6	4388,-	Kun bak	D
			9,5x19	6	Nitro Volcano	40	43	6	4632,-	Kun bak	D
			8,5x20	2	Nitro Sapphire FF	40	43	6	5216,-		D
			8,5x20	3	Nitro Turismo FF	35	43	16	4812,-		D
			8,5x20	4	Nitro Turismo FF G.Gun/Pol	35	43	16	4964,-		D
			8,5x20	7	Nitro Spark G.Blk/Grey	35	43	16	4660,-		D
			8,5x20	9	Nitro Sabre G.Blk	35	43	16	4800,-		D
			8,5x20	10	Nitro Demon H.Slv	38	43	10	4104,-		D
			8,5x20	11	Nitro Demon	38	43	10	3808,-		D
			8,5x20	24	ATS Mizar	40	43	6	5948,-		C,D
			8,5x20	25	ATS Mizar G.Blk	40	43	6	6020,-		C,D
			8,5x20	36	Image Colt	35	43	16	3432,-		D
			8,5x20	92	Image Colt L.Gun	35	43	16	3276,-		
			9x20	5	Nitro Volcano G.Gun	32	43	22	4824,-		D,M
			9x20	6	Nitro Volcano	32	43	22	5164,-		D,M
			9x20	15	Nitro Magnum	35	43	16	4572,-		D
			10,5x20	5	Nitro Volcano G.Gun	42	43	2	4824,-	Kun bak	D,M
			10,5x20	6	Nitro Volcano	42	43	2	5164,-	Kun bak	D,M
			9x21	5	Nitro Volcano G.Gun	32	43	22	5540,-		D,M
			9x21	6	Nitro Volcano	32	43	22	5996,-		D,M
			9x21	24	ATS Mizar	37	43	12	8276,-		C,D
			9x21	25	ATS Mizar G.Blk	37	43	12	8352,-		C,D
			10,5x21	5	Nitro Volcano G.Gun	42	43	2	5540,-	Kun bak	D,M
			10,5x21	6	Nitro Volcano	42	43	2	5996,-	Kun bak	D,M
			9x22	15	Nitro Magnum	35	43	16	5420,-		D
			10,5x22	15	Nitro Magnum	42	43	2	5420,-	Kun bak	D,M
MERCEDES			PCD: **5-112** Bolt - Mutter: **14x1,50B**			CB: **66,6**					
CL-Coupe (W216) CL63 AMG	10.06-03.14	19-22	8,5x19	3	Nitro Turismo FF	35	43	16	4492,-		D
CL65 AMG 20"			8,5x19	4	Nitro Turismo FF G.Gun/Pol	35	43	16	4644,-		D
S-Class (W221) S63 AMG	05.06-04.13	19-22	9,5x19	3	Nitro Turismo FF	40	43	6	4660,-	Kun bak	D
S65 AMG			9,5x19	4	Nitro Turismo FF G.Gun/Pol	40	43	6	4812,-	Kun bak	D
			8,5x20	3	Nitro Turismo FF	35	43	16	4812,-		D
			8,5x20	4	Nitro Turismo FF G.Gun/Pol	35	43	16	4964,-		D
			8,5x20	10	Nitro Demon H.Slv	38	43	10	4104,-		D
			8,5x20	11	Nitro Demon	38	43	10	3808,-		D
			8,5x20	24	ATS Mizar	40	43	6	5948,-		C,D
			8,5x20	25	ATS Mizar G.Blk	40	43	6	6020,-		C,D
			9x20	10	Nitro Demon H.Slv	40	43	6	4104,-		D
			9x20	11	Nitro Demon	40	43	6	3808,-		D
			9x21	24	ATS Mizar	37	43	12	8276,-		C,D
			9x21	25	ATS Mizar G.Blk	37	43	12	8352,-		C,D

Bilmerke - Bilmodell	Årsmodell	Dimensjon	Felgdim.	Bilde	Felgmodell	ET Felg	ET Bil	Avvik ET	Veil. Pris eks. MVA	Merknader	B,C D, M
MERCEDES				PCD: **5-112** Bolt - Mutter: **14x1,50B**		CB: **66,5**					
S-Class (A217) cab	12.15-	18-22	7,5x17	36	Image Colt	35	41	12	1956,-		D
S500 med 370mm bremser 19"			7,5x17	46	Image Stella	35	41	12	1812,-		D
S-Class (C217) coupe	04.14-	18-22	7,5x17	47	Image Stella M.Blk	35	41	12	1812,-		D
S500 med 370mm bremser 19"			7,5x17	92	Image Colt L.Gun	35	41	12	1876,-		D
S-Class (W222) sedan	05.13-	17-22	8x17	9	Nitro Sabre G.Blk	35	41	12	3108,-		D
S500 18"			8x18	2	Nitro Sapphire FF	39	41	4	4036,-		D
S600 19"			8x18	7	Nitro Spark G.Blk/Grey	35	41	12	3476,-		C,D
			8x18	9	Nitro Sabre G.Blk	35	41	12	3496,-		D
			8x18	10	Nitro Demon H.Slv	35	41	12	2972,-		D
			8x18	11	Nitro Demon	35	41	12	2784,-		D
			8x18	17	BM Drive M.Gun	35	41	12	2296,-		D
			8x18	36	Image Colt	35	41	12	2412,-		D
			8x18	46	Image Stella	35	41	12	2276,-		D
			8x18	47	Image Stella M.Blk	35	41	12	2276,-		D
			8x18	48	Image Motion	35	41	12	2204,-		D
			8x18	49	Image Motion G.Gun	35	41	12	2204,-		D
			8x18	50	Image Legend	35	41	12	2276,-		D
			8x18	92	Image Colt L.Gun	35	41	12	2296,-		D
			8x18	93	Image Star FF L.Gun	38	41	6	2936,-		C,D
			8x18	95	Image Star FF G.Blk/Pol	38	41	6	3076,-		C,D
			8,5x18	16	Advanti Inizio DST	35	41	12	3828,-		D
			8,5x18	24	ATS Mizar	34	41	14	3016,-	**OE-fit**	B,C,D
			8,5x18	25	ATS Mizar G.Blk	34	41	14	3116,-	**OE-fit**	B,C,D
			9x18	16	Advanti Inizio DST	45	41	-8	3828,-	Kun bak	D
			8x19	2	Nitro Sapphire FF	39	41	4	4684,-		D
			8x19	10	Nitro Demon H.Slv	35	41	12	3624,-		D
			8x19	11	Nitro Demon	35	41	12	3376,-		D
			8x19	48	Image Motion	35	41	12	2532,-		D
			8x19	49	Image Motion G.Gun	35	41	12	2532,-		D
			8,5x19	2	Nitro Sapphire FF	40	41	2	4684,-		D
			8,5x19	3	Nitro Turismo FF	35	41	12	4492,-		D
			8,5x19	4	Nitro Turismo FF G.Gun/Pol	35	41	12	4644,-		D
			8,5x19	5	Nitro Volcano G.Gun	40	41	2	4388,-		D
			8,5x19	6	Nitro Volcano	40	41	2	4632,-		D
			8,5x19	9	Nitro Sabre G.Blk	35	41	12	4292,-		D
			8,5x19	16	Advanti Inizio DST	35	41	12	4412,-		D
			8,5x19	24	ATS Mizar	34	41	14	4176,-	**OE-fit**	B,C,D
			8,5x19	25	ATS Mizar G.Blk	34	41	14	4116,-	**OE-fit**	B,C,D
			8,5x19	36	Image Colt	35	41	12	3028,-		D
			8,5x19	92	Image Colt L.Gun	35	41	12	2876,-		D
			9x19	12	Nitro Edge M.Blk	40	41	2	3884,-		D
			9,5x19	3	Nitro Turismo FF	40	41	2	4660,-	Kun bak	D
			9,5x19	4	Nitro Turismo FF G.Gun/Pol	40	41	2	4812,-	Kun bak	D
			9,5x19	5	Nitro Volcano G.Gun	40	41	2	4388,-	Kun bak	D
			9,5x19	6	Nitro Volcano	40	41	2	4632,-	Kun bak	D
			9,5x19	16	Advanti Inizio DST	45	41	-8	4412,-	Kun bak	D
			8,5x20	2	Nitro Sapphire FF	40	41	2	5216,-		D
			8,5x20	3	Nitro Turismo FF	35	41	12	4812,-		D
			8,5x20	4	Nitro Turismo FF G.Gun/Pol	35	41	12	4964,-		D
			8,5x20	7	Nitro Spark G.Blk/Grey	35	41	12	4660,-		D
			8,5x20	9	Nitro Sabre G.Blk	35	41	12	4800,-		D
			8,5x20	10	Nitro Demon H.Slv	38	41	6	4104,-		D
			8,5x20	11	Nitro Demon	38	41	6	3808,-		D
			8,5x20	24	ATS Mizar	40	41	2	5948,-		C,D
			8,5x20	25	ATS Mizar G.Blk	40	41	2	6020,-		C,D
			8,5x20	36	Image Colt	35	41	12	3432,-		D
			8,5x20	92	Image Colt L.Gun	35	41	12	3276,-		D
			9x20	5	Nitro Volcano G.Gun	40	41	2	4824,-		D
			9x20	6	Nitro Volcano	40	41	2	5164,-		D
			9x20	12	Nitro Edge M.Blk	40	41	2	4220,-		D
			9x20	15	Nitro Magnum	35	41	12	4572,-		D
			9,5x20	5	Nitro Volcano G.Gun	40	41	2	4824,-	Kun bak	D
			9,5x20	6	Nitro Volcano	40	41	2	5164,-	Kun bak	D
			10,5x20	3	Nitro Turismo FF	40	41	2	5116,-	Kun bak	D,M
			10,5x20	4	Nitro Turismo FF G.Gun/Pol	40	41	2	5288,-	Kun bak	D,M
			10,5x20	5	Nitro Volcano G.Gun	42	41	-2	4824,-	Kun bak	D,M
			10,5x20	6	Nitro Volcano	42	41	-2	5164,-	Kun bak	D,M
			9x21	5	Nitro Volcano G.Gun	40	41	2	5540,-		D
			9x21	6	Nitro Volcano	40	41	2	5996,-		D
			9x21	24	ATS Mizar	37	41	8	8276,-		C,D
			9x21	25	ATS Mizar G.Blk	37	41	8	8352,-		C,D
			9,5x21	5	Nitro Volcano G.Gun	40	41	2	5540,-	Kun bak	D
			9,5x21	6	Nitro Volcano	40	41	2	5996,-	Kun bak	D
			10,5x21	5	Nitro Volcano G.Gun	42	41	-2	5540,-	Kun bak	D,M
			10,5x21	6	Nitro Volcano	42	41	-2	5996,-	Kun bak	D,M
			9x22	12	Nitro Edge M.Blk	40	41	2	4888,-		D
			9x22	15	Nitro Magnum	35	41	12	5420,-		D
			10,5x22	15	Nitro Magnum	42	41	-2	5420,-	Kun bak	D,M
MERCEDES				PCD: **5-112** Bolt - Mutter: **14x1,50B**		CB: **66,5**					
S-Class (A217) 63 AMG cab	04.16-	19-22	8,5x19	3	Nitro Turismo FF	35	39	8	4492,-		D
(Keramsika bremser 420mm			8,5x19	4	Nitro Turismo FF G.Gun/Pol	35	39	8	4644,-		D
S-Class (A217) 65 AMG cab	04.16-	20-22	9,5x19	3	Nitro Turismo FF	40	39	-2	4660,-	Kun bak	D
S-Class (C217) 63 AMG coupe	04.14-	19-22	9,5x19	4	Nitro Turismo FF G.Gun/Pol	40	39	-2	4812,-	Kun bak	D
(Keramsika bremser 420mm			8,5x20	3	Nitro Turismo FF	35	39	8	4812,-		D
minst 20", spør oss!)			8,5x20	4	Nitro Turismo FF G.Gun/Pol	35	39	8	4964,-		D
S-Class (C217) 65 AMG coupe	04.14-	20-22	8,5x20	10	Nitro Demon H.Slv	38	39	2	4104,-		D

Forts. neste side »

Bilmerke - Bilmodell	Årsmodell	Dimensjon	Felgdim.	Bilde	Felgmodell	ET Felg	ET Bil	Avvik ET	Veil. Pris eks. MVA	Merknader	B,C D, M
MERCEDES (forts.)			PCD: **5-112** Bolt - Mutter: **14x1,50B**			CB: **66,5**					
S-Class (W222) 63 AMG sedan	09.13-	19-22	8,5x20	11	Nitro Demon	38	39	2	3808,-		D
S-Class (W222) 65 AMG sedan	09.13-	20-22	9x20	10	Nitro Demon H.Slv	40	39	-2	4104,-		D
			9x20	11	Nitro Demon	40	39	-2	3808,-		D
			10,5x20	3	Nitro Turismo FF	40	39	-2	5116,-	Kun bak	D,M
			10,5x20	4	Nitro Turismo FF G.Gun/Pol	40	39	-2	5288,-	Kun bak	D,M
MERCEDES			PCD: **5-112** Bolt - Mutter: **14x1,50B**			CB: **66,5**					
Maybach (W222)	04.15-	19-22	8,5x19	3	Nitro Turismo FF	35	36	2	4492,-		D
			8,5x19	4	Nitro Turismo FF G.Gun/Pol	35	36	2	4644,-		D
			8,5x20	3	Nitro Turismo FF	35	36	2	4812,-		D
			8,5x20	4	Nitro Turismo FF G.Gun/Pol	35	36	2	4964,-		D
			10,5x20	3	Nitro Turismo FF	40	43	6	5116,-	Kun bak	D,M
			10,5x20	4	Nitro Turismo FF G.Gun/Pol	40	43	6	5288,-	Kun bak	D,M
MERCEDES			PCD: **5-112** Bolt - Mutter: **14x1,50B**			CB: **66,5**					
GLK-Class (X204)	09.08-05.15	17-22	7,5x17	9	Nitro Sabre G.Blk	45	47	4	3052,-		D
			7,5x17	24	ATS Mizar	47	47	0	2268,-		C,D
			7,5x17	25	ATS Mizar G.Blk	47	47	0	2340,-		C,D
			7,5x17	36	Image Colt	45	47	4	1956,-		D
			7,5x17	46	Image Stella	35	47	24	1812,-		D
			7,5x17	47	Image Stella M.Blk	35	47	24	1812,-		D
			7,5x17	92	Image Colt L.Gun	45	47	4	1876,-		D
			8x17	17	BM Drive M.Gun	45	47	4	1736,-		D
			8x17	48	Image Motion	45	47	4	1736,-		D
			7,5x18	2	Nitro Sapphire FF	48	47	-2	3944,-		D
			8x18	7	Nitro Spark G.Blk/Grey	45	47	4	3476,-		C,D
			8x18	8	Nitro Spark G.Blk/Red	45	47	4	3476,-		C,D
			8x18	9	Nitro Sabre G.Blk	45	47	4	3496,-		D
			8x18	10	Nitro Demon H.Slv	40	47	14	2972,-		D
			8x18	11	Nitro Demon	40	47	14	2784,-		D
			8x18	16	Advanti Inizio DST	45	47	4	3828,-		D
			8x18	17	BM Drive M.Gun	45	47	4	2296,-		D
			8x18	26	CSP 18 G.Blk/pol	47	47	0	2956,-		D
			8x18	27	CSP 18	47	47	0	2972,-		D
			8x18	28	CSP 18 G.Blk	47	47	0	2972,-		D
			8x18	36	Image Colt	45	47	4	2412,-		D
			8x18	48	Image Motion	45	47	4	2204,-		D
			8x18	92	Image Colt L.Gun	45	47	4	2296,-		D
			8x18	93	Image Star FF L.Gun	43	47	8	2936,-		C,D
			8x18	94	Image Star FF Slv	43	47	8	2936,-		C,D
			8x18	95	Image Star FF G.Blk/Pol	43	47	8	3076,-		C,D
			9x18	16	Advanti Inizio DST	45	57	24	3828,-	Kun bak	D
			7,5x19	2	Nitro Sapphire FF	48	47	-2	4572,-		D
			8x19	10	Nitro Demon H.Slv	40	47	14	3624,-		D
			8x19	16	Advanti Inizio DST	45	47	4	4412,-		D
			8x19	26	CSP 18 G.Blk/pol	47	47	0	3596,-		D
			8x19	27	CSP 18	47	47	0	3444,-		D
			8x19	28	CSP 18 G.Blk	47	47	0	3444,-		D
			8x19	48	Image Motion	45	47	4	2532,-		D
			8,5x19	5	Nitro Volcano G.Gun	40	47	14	4388,-		D
			8,5x19	6	Nitro Volcano	40	47	14	4632,-		D
			8,5x19	9	Nitro Sabre G.Blk	45	47	4	4292,-		D
			8,5x19	36	Image Colt	45	47	4	3028,-		D
			8,5x19	92	Image Colt L.Gun	45	47	4	2876,-		D
			9x19	10	Nitro Demon H.Slv	45	57	24	3624,-	Kun bak	D
			9x19	11	Nitro Demon	45	57	24	3376,-	Kun bak	D
			9,5x19	5	Nitro Volcano G.Gun	50	57	14	4388,-	Kun bak	D
			9,5x19	6	Nitro Volcano	50	57	14	4632,-	Kun bak	D
			9,5x19	16	Advanti Inizio DST	45	57	24	4412,-	Kun bak	D
			8x20	2	Nitro Sapphire FF	48	47	-2	5096,-		D
			8,5x20	3	Nitro Turismo FF	43	47	8	4812,-		D
			8,5x20	4	Nitro Turismo FF G.Gun/Pol	43	47	8	4964,-		D
			8,5x20	7	Nitro Spark G.Blk/Grey	45	47	4	4660,-		D
			8,5x20	8	Nitro Spark G.Blk/Red	45	47	4	4660,-		D
			8,5x20	9	Nitro Sabre G.Blk	45	47	4	4800,-		D
			8,5x20	10	Nitro Demon H.Slv	45	47	4	4104,-		D
			8,5x20	11	Nitro Demon	45	47	4	3808,-		D
			8,5x20	36	Image Colt	45	47	4	3432,-		D
			8,5x20	92	Image Colt L.Gun	45	47	4	3276,-		D
			9x20	5	Nitro Volcano G.Gun	40	47	14	4824,-		D
			9x20	6	Nitro Volcano	40	47	14	5164,-		D
			9x20	10	Nitro Demon H.Slv	48	47	-2	4104,-		D,M
			9,5x20	5	Nitro Volcano G.Gun	50	57	14	4824,-	Kun bak	D
			9,5x20	6	Nitro Volcano	50	57	14	5164,-	Kun bak	D
			9x21	5	Nitro Volcano G.Gun	40	47	14	5540,-		D
			9x21	6	Nitro Volcano	40	47	14	5996,-		D
MERCEDES			PCD: **5-112** Bolt - Mutter: **14x1,50B**			CB: **66,5**					
GLC (204X)	06.15-	17-22	7,5x17	24	ATS Mizar	36	40	8	2268,-	**OE-fit**	B,C,D
(Biler med AMG sportpakke 18")			7,5x17	25	ATS Mizar G.Blk	36	40	8	2340,-	**OE-fit**	B,C,D
			7,5x17	46	Image Stella	35	40	10	1812,-		D
			7,5x17	47	Image Stella M.Blk	35	40	10	1812,-		D
			7,5x17	50	Image Legend	35	40	10	1812,-		D
			8x17	9	Nitro Sabre G.Blk	35	40	10	3108,-		D
			8x17	17	BM Drive M.Gun	35	40	10	1736,-		D
			8x17	40	Image Spirit	35	40	10	1476,-		D
			8x17	48	Image Motion	35	40	10	1736,-		D
			8x17	49	Image Motion G.Gun	35	40	10	1736,-		D

Forts. neste side »

Bilmerke - Bilmodell	Årsmodell	Dimensjon	Felgdim.	Bilde	Felgmodell	ET Felg	ET Bil	Avvik ET	Veil. Pris eks. MVA	Merknader	B,C D, M
MERCEDES (forts.)				PCD: **5-112** Bolt - Mutter: **14x1,50B**		CB: **66,5**					
			8x18	2	Nitro Sapphire FF	30	40	20	4036,-		D
			8x18	7	Nitro Spark G.Blk/Grey	35	40	10	3476,-		C,D
			8x18	9	Nitro Sabre G.Blk	35	40	10	3496,-		D
			8x18	10	Nitro Demon H.Slv	35	40	10	2972,-		D
			8x18	11	Nitro Demon	35	40	10	2784,-		D
			8x18	16	Advanti Inizio DST	35	40	10	3828,-		D
			8x18	17	BM Drive M.Gun	35	40	10	2296,-		D
			8x18	24	ATS Mizar	38	40	4	3016,-	**OE-fit**	B,C,D
			8x18	25	ATS Mizar G.Blk	38	40	4	3116,-	**OE-fit**	B,C,D
			8x18	36	Image Colt	35	40	10	2412,-		D
			8x18	40	Image Spirit	35	40	10	1912,-		D
			8x18	46	Image Stella	35	40	10	2276,-		D
			8x18	47	Image Stella M.Blk	35	40	10	2276,-		D
			8x18	48	Image Motion	35	40	10	2204,-		D
			8x18	49	Image Motion G.Gun	35	40	10	2204,-		D
			8x18	50	Image Legend	35	40	10	2276,-		D
			8x18	92	Image Colt L.Gun	35	40	10	2296,-		D
			8x18	93	Image Star FF L.Gun	38	40	4	2936,-	**OE-fit**	B,C,D
			8x18	95	Image Star FF G.Blk/Pol	38	40	4	3076,-	**OE-fit**	B,C,D
			8,5x18	16	Advanti Inizio DST	35	40	10	3828,-		D
			8,5x18	24	ATS Mizar	34	40	12	3016,-		C,D
			8,5x18	25	ATS Mizar G.Blk	34	40	12	3116,-		C,D
			8x19	2	Nitro Sapphire FF	30	40	20	4684,-		D
			8x19	10	Nitro Demon H.Slv	35	40	10	3624,-		D
			8x19	11	Nitro Demon	35	40	10	3376,-		D
			8x19	16	Advanti Inizio DST	35	40	10	4412,-		D
			8x19	24	ATS Mizar	38	40	4	3720,-	**OE-fit**	B,C,D
			8x19	25	ATS Mizar G.Blk	38	40	4	3868,-	**OE-fit**	B,C,D
			8x19	48	Image Motion	35	40	10	2532,-		D
			8x19	49	Image Motion G.Gun	35	40	10	2532,-		D
			8,5x19	2	Nitro Sapphire FF	40	40	0	4684,-		D
			8,5x19	3	Nitro Turismo FF	35	40	10	4492,-		D
			8,5x19	4	Nitro Turismo FF G.Gun/Pol	35	40	10	4644,-		D
			8,5x19	5	Nitro Volcano G.Gun	32	40	16	4388,-		D
			8,5x19	6	Nitro Volcano	32	40	16	4632,-		D
			8,5x19	9	Nitro Sabre G.Blk	35	40	10	4292,-		D
			8,5x19	16	Advanti Inizio DST	35	40	10	4412,-		D
			8,5x19	24	ATS Mizar	34	40	12	4176,-		C,D
			8,5x19	25	ATS Mizar G.Blk	34	40	12	4116,-		C,D
			8,5x19	36	Image Colt	35	40	10	3028,-		D
			8,5x19	92	Image Colt L.Gun	35	40	10	2876,-		D
			8,5x20	2	Nitro Sapphire FF	40	40	0	5216,-		D
			8,5x20	3	Nitro Turismo FF	35	40	10	4812,-		D
			8,5x20	4	Nitro Turismo FF G.Gun/Pol	35	40	10	4964,-		D
			8,5x20	7	Nitro Spark G.Blk/Grey	35	40	10	4660,-		D
			8,5x20	9	Nitro Sabre G.Blk	35	40	10	4800,-		D
			8,5x20	10	Nitro Demon H.Slv	38	40	4	4104,-		D
			8,5x20	11	Nitro Demon	38	40	4	3808,-		D
			8,5x20	24	ATS Mizar	40	40	0	5948,-	**OE-fit**	B,C,D
			8,5x20	25	ATS Mizar G.Blk	40	40	0	6020,-	**OE-fit**	B,C,D
			8,5x20	36	Image Colt	35	40	10	3432,-		D
			8,5x20	92	Image Colt L.Gun	35	40	10	3276,-		D
			9x20	5	Nitro Volcano G.Gun	32	40	16	4824,-		D
			9x20	6	Nitro Volcano	32	40	16	5164,-		D
			9x20	15	Nitro Magnum	28	40	24	4572,-		D
			9x21	5	Nitro Volcano G.Gun	32	40	16	5540,-		D
			9x21	6	Nitro Volcano	32	40	16	5996,-		D
			9x21	24	ATS Mizar	37	40	6	8276,-	**OE-fit**	B,C,D
			9x21	25	ATS Mizar G.Blk	37	40	6	8352,-	**OE-fit**	B,C,D
			9x22	15	Nitro Magnum	28	40	24	5420,-		D
MERCEDES				PCD: **5-112** Bolt - Mutter: **14x1,50**		CB: **66,5**					
GLC (204X) 43 AMG	07.16-	19-22	8x18	11	Nitro Demon	35	38	6	2784,-		D
GLC (204X) coupe	07.16-	18-22	8x18	17	BM Drive M.Gun	35	38	6	2296,-		D
			8x18	17	BM Drive M.Gun	25	22	-6	2296,-	Kun bak	D
			8x18	46	Image Stella	35	38	6	2276,-		D
			8x18	47	Image Stella M.Blk	35	38	6	2276,-		D
			8x18	48	Image Motion	35	38	6	2204,-		D
			8x18	49	Image Motion G.Gun	35	38	6	2204,-		D
			8x18	50	Image Legend	35	38	6	2276,-		D
			8x18	93	Image Star FF L.Gun	38	38	0	2936,-	**OE-fit**	B,C,D
			8x18	95	Image Star FF G.Blk/Pol	38	38	0	3076,-	**OE-fit**	B,C,D
			8,5x18	24	ATS Mizar	34	38	8	3016,-	**OE-fit**	B,C,D
			8,5x18	25	ATS Mizar G.Blk	34	38	8	3116,-	**OE-fit**	B,C,D
			8x19	3	Nitro Turismo FF	30	38	16	4492,-		D
			8x19	4	Nitro Turismo FF G.Gun/Pol	30	38	16	4644,-		D
			8x19	11	Nitro Demon	35	38	6	3376,-		D
			8x19	24	ATS Mizar	38	38	0	3720,-	**OE-fit**	B,C,D
			8x19	25	ATS Mizar G.Blk	38	38	0	3868,-	**OE-fit**	B,C,D
			8x19	48	Image Motion	35	38	6	2532,-		D
			8x19	49	Image Motion G.Gun	35	38	6	2532,-		D
			8,5x19	3	Nitro Turismo FF	35	38	6	4492,-		D
			8,5x19	4	Nitro Turismo FF G.Gun/Pol	35	38	6	4644,-		D
			8,5x19	5	Nitro Volcano G.Gun	32	38	12	4388,-		D
			8,5x19	6	Nitro Volcano	32	38	12	4632,-		D
			8,5x19	24	ATS Mizar	34	38	8	4176,-		D
			8,5x19	25	ATS Mizar G.Blk	34	38	8	4116,-		D

Forts. neste side »

Bilmerke - Bilmodell	Årsmodell	Dimensjon	Felgdim.	Bilde	Felgmodell	ET Felg	ET Bil	Avvik ET	Veil. Pris eks. MVA	Merknader	B,C D, M
MERCEDES (forts.)			PCD: **5-112** Bolt - Mutter: **14x1,50** CB: **66,5**								
			9x19	3	Nitro Turismo FF	20	22	4	4660,-	Kun bak	D
			9x19	4	Nitro Turismo FF G.Gun/Pol	20	22	4	4812,-	Kun bak	D
			9,5x19	3	Nitro Turismo FF	25	22	-6	4660,-	Kun bak	D
			9,5x19	4	Nitro Turismo FF G.Gun/Pol	25	22	-6	4812,-	Kun bak	D
			9,5x19	5	Nitro Volcano G.Gun	25	22	-6	4388,-	Kun bak	D
			9,5x19	6	Nitro Volcano	25	22	-6	4632,-	Kun bak	D
			10,5x19	3	Nitro Turismo FF	25	22	-6	4812,-	Kun bak	D,M
			10,5x19	4	Nitro Turismo FF G.Gun/Pol	25	22	-6	4964,-	Kun bak	D,M
			8,5x20	3	Nitro Turismo FF	35	38	6	4812,-		D
			8,5x20	4	Nitro Turismo FF G.Gun/Pol	35	38	6	4964,-		D
			8,5x20	11	Nitro Demon	38	38	0	3808,-		D
			8,5x20	11	Nitro Demon	25	22	-6	3808,-	Kun bak	D
			8,5x20	24	ATS Mizar	40	38	-4	5948,-	**OE-fit**	B,C,D
			8,5x20	24	ATS Mizar	29	22	-14	5948,-	**OE-fit**, kun bak	B,C,D
			8,5x20	25	ATS Mizar G.Blk	40	38	-4	6020,-	**OE-fit**	B,C,D
			8,5x20	25	ATS Mizar G.Blk	29	22	-14	6020,-	**OE-fit**, kun bak	B,C,D
			9x20	5	Nitro Volcano G.Gun	32	38	12	4824,-		D
			9x20	6	Nitro Volcano	32	38	12	5164,-		D
			9x20	15	Nitro Magnum	28	38	20	4572,-		D
			9,5x20	3	Nitro Turismo FF	25	22	-6	4960,-	Kun bak	D
			9,5x20	4	Nitro Turismo FF G.Gun/Pol	25	22	-6	5048,-	Kun bak	D
			10,5x20	3	Nitro Turismo FF	25	22	-6	5116,-	Kun bak	D,M
			10,5x20	4	Nitro Turismo FF G.Gun/Pol	25	22	-6	5288,-	Kun bak	D,M
			10,5x20	5	Nitro Volcano G.Gun	30	22	-16	4824,-	Kun bak	D,M
			10,5x20	6	Nitro Volcano	30	22	-16	5164,-	Kun bak	D,M
			9x21	5	Nitro Volcano G.Gun	32	38	12	5540,-		D
			9x21	6	Nitro Volcano	32	38	12	5996,-		D
			9x21	24	ATS Mizar	37	38	2	8276,-	**OE-fit**	B,C,D
			9x21	25	ATS Mizar G.Blk	37	38	2	8352,-	**OE-fit**	B,C,D
			10x21	24	ATS Mizar	30	22	-16	9016,-	**OE-fit**, kun bak	B,C,D
			10x21	25	ATS Mizar G.Blk	30	22	-16	9156,-	**OE-fit**, kun bak	B,C,D
			10,5x21	5	Nitro Volcano G.Gun	30	22	-16	5540,-	Kun bak	D,M
			10,5x21	6	Nitro Volcano	30	22	-16	5996,-	Kun bak	D,M
			9x22	15	Nitro Magnum	28	38	20	5420,-		D
MERCEDES			PCD: **5-112** Bolt - Mutter: **14x1,50B** CB: **66,5**								
GLC (X205) 63 AMG	12.17-	19-22	8x19	3	Nitro Turismo FF	18	30	24	4492,-		D
63 AMG S (375kW) 20"			8x19	4	Nitro Turismo FF G.Gun/Pol	18	30	24	4644,-		D
			9x19	3	Nitro Turismo FF	20	28	16	4660,-	Kun bak	D
			9x19	4	Nitro Turismo FF G.Gun/Pol	20	28	16	4812,-	Kun bak	D
			9,5x19	3	Nitro Turismo FF	25	28	6	4660,-	Kun bak	D
			9,5x19	4	Nitro Turismo FF G.Gun/Pol	25	28	6	4812,-	Kun bak	D
			10,5x19	3	Nitro Turismo FF	25	28	6	4812,-	Kun bak	D
			10,5x19	4	Nitro Turismo FF G.Gun/Pol	25	28	6	4964,-	Kun bak	D
			9x20	5	Nitro Volcano G.Gun	25	30	10	4824,-		D
			9x20	6	Nitro Volcano	25	30	10	5164,-		D
			9,5x20	3	Nitro Turismo FF	30	30	0	4960,-		D
			9,5x20	3	Nitro Turismo FF	20	28	16	4960,-	Kun bak	D
			9,5x20	4	Nitro Turismo FF G.Gun/Pol	30	30	0	5048,-		D
			9,5x20	4	Nitro Turismo FF G.Gun/Pol	20	28	16	5048,-	Kun bak	D
			10x20	3	Nitro Turismo FF	25	28	6	5116,-	Kun bak	D
			10x20	4	Nitro Turismo FF G.Gun/Pol	25	28	6	5288,-	Kun bak	D
			10,5x20	3	Nitro Turismo FF	25	28	6	5116,-	Kun bak	D
			10,5x20	4	Nitro Turismo FF G.Gun/Pol	25	28	6	5288,-	Kun bak	D
			10,5x20	5	Nitro Volcano G.Gun	30	28	-4	4824,-	Kun bak	D
			10,5x20	6	Nitro Volcano	30	28	-4	5164,-	Kun bak	D
			9x21	5	Nitro Volcano G.Gun	25	30	10	5540,-		D
			9x21	6	Nitro Volcano	25	30	10	5996,-		D
			10,5x21	5	Nitro Volcano G.Gun	30	28	-4	5540,-	Kun bak	D
			10,5x21	6	Nitro Volcano	30	28	-4	5996,-	Kun bak	D
MERCEDES			PCD: **5-112** Bolt - Mutter: **14x1,50B** CB: **66,6**								
R-Class (W251)	11.06-10.12	17-22	8x19	24	ATS Mizar	52	56	8	3720,-		C,D
R500 18"			8x19	25	ATS Mizar G.Blk	52	56	8	3868,-		C,D
R63 AMG 20"			8,5x20	24	ATS Mizar	62	56	-12	5948,-	**OE-fit**	B,C,D
			8,5x20	25	ATS Mizar G.Blk	62	56	-12	6020,-	**OE-fit**	B,C,D
			9x21	24	ATS Mizar	53	56	6	8276,-	**OE-fit**	B,C,D
			9x21	25	ATS Mizar G.Blk	53	56	6	8352,-	**OE-fit**	B,C,D
			10x21	24	ATS Mizar	55	56	2	9016,-		C,D
			10x21	25	ATS Mizar G.Blk	55	56	2	9156,-		C
MERCEDES			PCD: **5-112** Bolt - Mutter: **14x1,50B** CB: **66,5**								
EQC (N293)	09.19-	19-21	7,5x19	2	Nitro Sapphire FF	32	32	0	4572,-	**OE-fit**	B,D
			8x19	2	Nitro Sapphire FF	34	34	0	4684,-	**OE-fit**, kun bak	B,D
			8x20	2	Nitro Sapphire FF	27	32	10	5096,-	**OE-fit**	B,D
			9x20	2	Nitro Sapphire FF	31	34	6	5216,-	**OE-fit**, kun bak	B,D
MERCEDES			PCD: **5-112** Bolt - Mutter: **14x1,50B** CB: **66,5**								
GLE (W166) SUV	05.15-10.18	18-24	8x19	24	ATS Mizar	52	56	8	3720,-	**OE-fit**	B,C,D
GLE500 19"			8x19	25	ATS Mizar G.Blk	52	56	8	3868,-	**OE-fit**	B,C,D
M-Class (W164)	04.05-07.11	17-22	8,5x19	24	ATS Mizar	62	56	-12	4176,-	**OE-fit**	B,C,D
ML420CDI, ML500 19"			8,5x19	25	ATS Mizar G.Blk	62	56	-12	4116,-	**OE-fit**	B,C,D
M-Class (W166)	08.11-04.15	17-22	8,5x19	96	Image Colt SUV G.Blk/Pol	50	56	12	3492,-	**OE-fit**	B,D
ML350 18"			9x19	3	Nitro Turismo FF	45	56	22	4660,-		D
ML500 19"			9x19	4	Nitro Turismo FF G.Gun/Pol	45	56	22	4812,-		D
			9x19	10	Nitro Demon H.Slv	45	56	22	3624,-		D
			9x19	11	Nitro Demon	45	56	22	3376,-		D
			9x19	12	Nitro Edge M.Blk	48	56	16	3884,-		D
			9x19	26	CSP 18 G.Blk/pol	44	56	24	3596,-		D

Forts. neste side »

Bilmerke - Bilmodell	Årsmodell	Dimensjon	Felgdim.	Bilde	Felgmodell	ET Felg	ET Bil	Avvik ET	Veil. Pris eks. MVA	Merknader	B,C D, M
MERCEDES (forts.)				PCD: **5-112** Bolt - Mutter: **14x1,50B**		CB: **66,5**					
			9x19	27	CSP 18	44	56	24	3444,-		D
			9x19	28	CSP 18 G.Blk	44	56	24	3444,-		D
			8,5x20	24	ATS Mizar	62	56	-12	5948,-	**OE-fit**	B,C,D
			8,5x20	25	ATS Mizar G.Blk	62	56	-12	6020,-	**OE-fit**	B,C,D
			9x20	10	Nitro Demon H.Slv	48	56	16	4104,-		D
			9x20	12	Nitro Edge M.Blk	48	56	16	4220,-		D
			9x20	15	Nitro Magnum	40	56	32	4572,-		D
			9x20	96	Image Colt SUV G.Blk/Pol	52	56	8	4124,-	**OE-fit**	B,D
			9,5x20	10	Nitro Demon H.Slv	45	56	22	4104,-		D
			9,5x20	11	Nitro Demon	45	56	22	3808,-		D
			10x20	3	Nitro Turismo FF	50	56	12	5116,-		D
			10x20	4	Nitro Turismo FF G.Gun/Pol	50	56	12	5288,-		D
			10x20	12	Nitro Edge M.Blk	50	56	12	4220,-		D
			9x21	24	ATS Mizar	53	56	6	8276,-	**OE-fit**	B,C,D
			9x21	25	ATS Mizar G.Blk	53	56	6	8352,-	**OE-fit**	B,C,D
			10x21	24	ATS Mizar	55	56	2	9016,-	**OE-fit**	B,C,D
			10x21	25	ATS Mizar G.Blk	55	56	2	9156,-	**OE-fit**	B,C,D
			9x22	12	Nitro Edge M.Blk	48	56	16	4888,-		D
			9x22	15	Nitro Magnum	40	56	32	5420,-		D
			10x22	12	Nitro Edge M.Blk	50	56	12	4888,-		D
			10,5x22	15	Nitro Magnum	42	56	28	5420,-	Kun bak	D,M
MERCEDES				PCD: **5-112** Bolt - Mutter: **15x1,25B**		CB: **66,5**					
GLE (V167) SUV	12.18-	18-23	8,5x19	96	Image Colt SUV G.Blk/Pol	50	55	10	3492,-	**OE-fit**	B,D
För biler utan AMG sportpakke			8,5x19	96	Image Colt SUV G.Blk/Pol	38	42	8	3492,-	**OE-fit**, kun bak	B,D
			8,5x19	97	Image Colt SUV L.Gun	50	55	10	3396,-	**OE-fit**	B,D
			8,5x19	97	Image Colt SUV L.Gun	38	42	8	3396,-	**OE-fit**, kun bak	B,D
			9x20	3	Nitro Turismo FF	52	55	6	4960,-	**OE-fit**	B,D
			9x20	3	Nitro Turismo FF	42	42	0	4960,-	**OE-fit**, kun bak	B,D
			9x20	4	Nitro Turismo FF G.Gun/Pol	52	55	6	5048,-	**OE-fit**	B,D
			9x20	4	Nitro Turismo FF G.Gun/Pol	42	42	0	5048,-	**OE-fit**, kun bak	B,D
			9x20	96	Image Colt SUV G.Blk/Pol	52	55	6	4124,-	**OE-fit**	B,D
			9x20	96	Image Colt SUV G.Blk/Pol	40	42	4	4124,-	**OE-fit**, kun bak	B,D
			9x20	97	Image Colt SUV L.Gun	52	55	6	4008,-	**OE-fit**	B,D
			9x20	97	Image Colt SUV L.Gun	40	42	4	4008,-	**OE-fit**, kun bak	B,D
MERCEDES				PCD: **5-112** Bolt - Mutter: **15x1,25B**		CB: **66,5**					
GLE (V167) SUV	11.18-	20-23	9x20	3	Nitro Turismo FF	52	54	4	4960,-	**OE-fit**	B,D
För biler med AMG sportpakke			9x20	3	Nitro Turismo FF	42	49	14	4960,-	**OE-fit**, kun bak	B,D
			9x20	4	Nitro Turismo FF G.Gun/Pol	52	54	4	5048,-	**OE-fit**	B,D
			9x20	4	Nitro Turismo FF G.Gun/Pol	42	49	14	5048,-	**OE-fit**, kun bak	B,D
			9x20	96	Image Colt SUV G.Blk/Pol	52	54	4	4124,-	**OE-fit**	B,D
			9x20	96	Image Colt SUV G.Blk/Pol	40	49	18	4124,-	**OE-fit**, kun bak	B,D
			9x20	97	Image Colt SUV L.Gun	52	54	4	4008,-	**OE-fit**	B,D
			9x20	97	Image Colt SUV L.Gun	40	49	18	4008,-	**OE-fit**, kun bak	B,D
			9,5x22	1	Nitro Throne FF	42	54	24	6276,-		D
			11x22	1	Nitro Throne FF	45	49	8	6572,-	Kun bak	D
MERCEDES				PCD: **5-112** Bolt - Mutter: **15x1,25B**		CB: **66,5**					
GLE (V167) SUV 53 AMG	09.19-	20-23	9,5x22	1	Nitro Throne FF	42	51	18	6276,-		D
			11x22	1	Nitro Throne FF	45	47	4	6572,-	Kun bak	D
MERCEDES				PCD: **5-112** Bolt - Mutter: **14x1,50B**		CB: **66,6**					
M-Class (W164) ML63 AMG	05.06-07.11	19-22	9x19	3	Nitro Turismo FF	45	46	2	4660,-		D
			9x19	4	Nitro Turismo FF G.Gun/Pol	45	46	2	4812,-		D
			8,5x20	24	ATS Mizar	53	46	-14	5948,-	**OE-fit**	B,C,D
			8,5x20	25	ATS Mizar G.Blk	53	46	-14	6020,-	**OE-fit**	B,C,D
			9x20	10	Nitro Demon H.Slv	40	46	12	4104,-		D
			9x20	11	Nitro Demon	40	46	12	3808,-		D
			10x20	1	Nitro Throne FF	40	46	12	5308,-		M
			10x21	24	ATS Mizar	55	46	-18	9016,-		C,D
			10x21	25	ATS Mizar G.Blk	55	46	-18	9156,-		C
MERCEDES				PCD: **5-112** Bolt - Mutter: **14x1,50B**		CB: **66,5**					
GLE (W166) 43 AMG	05.15-	20-22	8,5x20	24	ATS Mizar	53	46	-14	5948,-	**OE-fit**	B,C,D
63 AMG 20"			8,5x20	25	ATS Mizar G.Blk	53	46	-14	6020,-	**OE-fit**	B,C,D
63 S AMG 20"			9,5x20	10	Nitro Demon H.Slv	45	46	2	4104,-		D
M-Class (W166) 63 AMG	11.11-04.15	20-22	9,5x20	11	Nitro Demon	45	46	2	3808,-		D
			10x20	1	Nitro Throne FF	40	46	12	5308,-		D,M
			9x21	24	ATS Mizar	37	46	18	8276,-	**OE-fit**	B,C,D
			9x21	25	ATS Mizar G.Blk	37	46	18	8352,-	**OE-fit**	B,C,D
			10x21	24	ATS Mizar	55	46	-18	9016,-		C,D
			10x21	25	ATS Mizar G.Blk	55	46	-18	9156,-		C,D
MERCEDES				PCD: **5-112** Bolt - Mutter: **14x1,50B**		CB: **66,5**					
GLE (C292) coupe	03.15-	19-22	8,5x19	96	Image Colt SUV G.Blk/Pol	38	38	0	3492,-	**OE-fit**, kun bak	B,D
GLE 450 AMG 21"			8,5x19	97	Image Colt SUV L.Gun	50	53	6	3396,-	**OE-fit**	B,D
GLE 63 AMG 21"			8,5x19	97	Image Colt SUV L.Gun	38	38	0	3396,-	**OE-fit**, kun bak	B,D
			9x19	10	Nitro Demon H.Slv	45	53	16	3624,-		D
			9x19	10	Nitro Demon H.Slv	28	38	20	3624,-	Kun bak	D
			9x19	11	Nitro Demon	45	53	16	3376,-		D
			9x19	11	Nitro Demon	28	38	20	3376,-	Kun bak	D
			8,5x20	24	ATS Mizar	53	53	0	5948,-	**OE-fit**	B,C,D
			8,5x20	24	ATS Mizar	29	38	18	5948,-	**OE-fit**, kun bak	B,C,D
			8,5x20	25	ATS Mizar G.Blk	53	53	0	6020,-	**OE-fit**	B,C,D
			8,5x20	25	ATS Mizar G.Blk	29	38	18	6020,-	**OE-fit**, kun bak	B,C,D
			9x20	10	Nitro Demon H.Slv	48	53	10	4104,-		D
			9x20	12	Nitro Edge M.Blk	48	53	10	4220,-		D
			9x20	96	Image Colt SUV G.Blk/Pol	40	38	-4	4124,-	**OE-fit**, kun bak	B,D
			9x20	97	Image Colt SUV L.Gun	52	53	2	4008,-	**OE-fit**	B,D
			9x20	97	Image Colt SUV L.Gun	40	38	-4	4008,-	**OE-fit**, kun bak	B,D

Forts. neste side »

Bilmerke - Bilmodell	Årsmodell	Dimensjon	Felgdim.	Bilde	Felgmodell	ET Felg	ET Bil	Avvik ET	Veil. Pris eks. MVA	Merknader	B,C D, M
MERCEDES (forts.)			PCD: **5-112** Bolt - Mutter: **14x1,50B** CB: **66,5**								
			9,5x20	10	Nitro Demon H.Slv	45	53	16	4104,-		D
			9,5x20	10	Nitro Demon H.Slv	30	38	16	4104,-	Kun bak	D
			9,5x20	11	Nitro Demon	45	53	16	3808,-		D
			9,5x20	11	Nitro Demon	30	38	16	3808,-	Kun bak	D
			10x20	3	Nitro Turismo FF	50	53	6	5116,-		D
			10x20	4	Nitro Turismo FF G.Gun/Pol	50	53	6	5288,-		D
			10x20	12	Nitro Edge M.Blk	30	38	16	4220,-	Kun bak	D
			11x20	3	Nitro Turismo FF	35	38	6	5296,-	Kun bak	D
			11x20	4	Nitro Turismo FF G.Gun/Pol	35	38	6	5416,-	Kun bak	D
			9x21	24	ATS Mizar	53	53	0	8276,-	**OE-fit**	B,C,D
			9x21	25	ATS Mizar G.Blk	53	53	0	8352,-	**OE-fit**	B,C,D
			10x21	24	ATS Mizar	55	53	-4	9016,-	**OE-fit**	B,C,D
			10x21	24	ATS Mizar	30	38	16	9016,-	**OE-fit**, kun bak	B,C,D
			10x21	25	ATS Mizar G.Blk	55	53	-4	9156,-	**OE-fit**	B,C,D
			10x21	25	ATS Mizar G.Blk	30	38	16	9156,-	**OE-fit**, kun bak	B,C,D
			9x22	12	Nitro Edge M.Blk	48	53	10	4888,-		D
			10x22	12	Nitro Edge M.Blk	30	38	16	4888,-	Kun bak	D
MERCEDES			PCD: **5-112** Bolt - Mutter: **14x1,50B** CB: **66,5**								
GLE (C292) coupe 43 AMG	11.15-	20-22	8,5x20	24	ATS Mizar	53	56	6	5948,-	**OE-fit**	B,C,D
63 AMG 20"			8,5x20	24	ATS Mizar	29	42	26	5948,-	**OE-fit**, kun bak	B,C,D
63 S AMG 20"			8,5x20	25	ATS Mizar G.Blk	53	56	6	6020,-	**OE-fit**	B,C,D
			8,5x20	25	ATS Mizar G.Blk	29	42	26	6020,-	**OE-fit**, kun bak	B,C,D
			9,5x20	10	Nitro Demon H.Slv	45	56	22	4104,-		D
			9,5x20	10	Nitro Demon H.Slv	30	42	24	4104,-	Kun bak	D
			9,5x20	11	Nitro Demon	45	56	22	3808,-		D
			9,5x20	11	Nitro Demon	30	42	24	3808,-	Kun bak	D
			10x20	3	Nitro Turismo FF	50	56	12	5116,-		D
			10x20	4	Nitro Turismo FF G.Gun/Pol	50	56	12	5288,-		D
			11x20	3	Nitro Turismo FF	35	42	14	5296,-	Kun bak	D
			11x20	4	Nitro Turismo FF G.Gun/Pol	35	42	14	5416,-	Kun bak	D
			9x21	24	ATS Mizar	53	56	6	8276,-	**OE-fit**	B,C,D
			9x21	25	ATS Mizar G.Blk	53	56	6	8352,-	**OE-fit**	B,C,D
			10x21	24	ATS Mizar	55	56	2	9016,-	**OE-fit**	B,C,D
			10x21	24	ATS Mizar	30	42	24	9016,-	**OE-fit**, kun bak	B,C,D
			10x21	25	ATS Mizar G.Blk	55	56	2	9156,-	**OE-fit**	B,C,D
			10x21	25	ATS Mizar G.Blk	30	42	24	9156,-	**OE-fit**, kun bak	B,C,D
MERCEDES			PCD: **5-112** Bolt - Mutter: **14x1,50B** CB: **66,6**								
GL-Class (X164)	06.06-09.12	18-22	8,5x19	24	ATS Mizar	62	56	-12	4176,-	**OE-fit**	B,C,D
GL420CDI, GL450 19"			8,5x19	25	ATS Mizar G.Blk	62	56	-12	4116,-	**OE-fit**	B,C,D
GL500 19"			9x19	10	Nitro Demon H.Slv	45	56	22	3624,-		D
GL-Class (X166)	10.12-10.15	18-22	9x19	11	Nitro Demon	45	56	22	3376,-		D
GL500 19"			9x19	12	Nitro Edge M.Blk	40	56	32	3884,-		D
(Biler med AMG sportpakke 19")			9x19	26	CSP 18 G.Blk/pol	44	56	24	3596,-		D
GLS (X166)	11.15-08.19	18-24	9x19	27	CSP 18	44	56	24	3444,-		D
GLS500 19"			9x19	28	CSP 18 G.Blk	44	56	24	3444,-		D
			8,5x20	24	ATS Mizar	62	56	-12	5948,-	**OE-fit**	B,C,D
			8,5x20	25	ATS Mizar G.Blk	62	56	-12	6020,-	**OE-fit**	B,C,D
			9x20	10	Nitro Demon H.Slv	48	56	16	4104,-		D
			9x20	12	Nitro Edge M.Blk	48	56	16	4220,-		D
			9x20	15	Nitro Magnum	40	56	32	4572,-		D
			9,5x20	10	Nitro Demon H.Slv	45	56	22	4104,-		D
			9,5x20	11	Nitro Demon	45	56	22	3808,-		D
			10x20	3	Nitro Turismo FF	50	56	12	5116,-		D
			10x20	4	Nitro Turismo FF G.Gun/Pol	50	56	12	5288,-		D
			10x20	12	Nitro Edge M.Blk	50	56	12	4220,-		D
			9x21	24	ATS Mizar	53	56	6	8276,-	**OE-fit**	B,C,D
			9x21	25	ATS Mizar G.Blk	53	56	6	8352,-	**OE-fit**	B,C,D
			10x21	24	ATS Mizar	55	56	2	9016,-	**OE-fit**	B,C,D
			10x21	25	ATS Mizar G.Blk	55	56	2	9156,-		B,C
			9x22	12	Nitro Edge M.Blk	48	56	16	4888,-		D
			9x22	15	Nitro Magnum	40	56	32	5420,-		D
			10x22	12	Nitro Edge M.Blk	50	56	12	4888,-		D
			10,5x22	15	Nitro Magnum	42	56	28	5420,-		D
MERCEDES			PCD: **5-112** Bolt - Mutter: **14x1,50B** CB: **66,5**								
GL-Class (X166) 63 AMG	10.12-10.15	20-22	9,5x20	10	Nitro Demon H.Slv	45	46	2	4104,-		D
GLS (X166) 63 AMG	11.15-	21-24	9,5x20	11	Nitro Demon	45	46	2	3808,-		D
MERCEDES			PCD: **5-112** Bolt - Mutter: **15x1,25B** CB: **66,5**								
GLS (X167)	09.19-	19-24	9x20	3	Nitro Turismo FF	52	63	21	4960,-	**OE-fit**	B,D
(Biler med AMG sportpakke 21",			9x20	3	Nitro Turismo FF	42	55	26	4960,-	**OE-fit**, kun bak	B,D
ET44 fram og ET47 bak)			9x20	4	Nitro Turismo FF G.Gun/Pol	52	63	21	5048,-	**OE-fit**	B,D
			9x20	4	Nitro Turismo FF G.Gun/Pol	42	55	26	5048,-	**OE-fit**, kun bak	B,D
			9x20	96	Image Colt SUV G.Blk/Pol	52	63	21	4124,-	**OE-fit**	B,D
			9x20	96	Image Colt SUV G.Blk/Pol	40	55	30	4124,-	**OE-fit**, kun bak	B,D
			9x20	97	Image Colt SUV L.Gun	52	63	21	4008,-	**OE-fit**	B,D
			9x20	97	Image Colt SUV L.Gun	40	55	30	4008,-	**OE-fit**, kun bak	B,D
			9,5x22	1	Nitro Throne FF	42	63	41	6276,-		D
			11x22	1	Nitro Throne FF	45	55	20	6572,-	Kun bak	D

Bilmerke - Bilmodell	Årsmodell	Dimensjon	Felgdim.	Bilde	Felgmodell	ET Felg	ET Bil	Avvik ET	Veil. Pris eks. MVA	Merknader	B,C D, M
MERCEDES				PCD: **5-130** Bolt - Mutter: **14x1,50B** CB: **84,1**							
G-Class (W460) Geländew.	03.79-08.91	15-20	6x15	65	CSP Work	50	63	26	2196,-		D
(Minsta felgdim. beroende			7x16	65	CSP Work	40	63	46	2556,-		D
på motor og årsmodell)			8x18	68	BM Macho	45	63	36	3300,-		D
G-Class (W461) Geländewagen	09.91-12.00	15-20	8x18	69	BM Macho M.Blk	45	63	36	3300,-		D
(Minsta felgdim. beroende											
på motor og årsmodell)											
G-Class (W463) Geländewagen	03.90-12.17	16-22									
G500 18"											
G55 AMG 18"											
MERCEDES				PCD: **6-114,3** Bolt - Mutter: **12x1,25** CB: **66,1**							
X-Class	11.17-	17-22	7,5x17	67	Image Rock	50	50	0	2796,-	**OE-fit**	B,C,D
			7,5x17	68	BM Macho	40	50	20	2756,-		D
			7,5x17	69	BM Macho M.Blk	40	50	20	2756,-		D
			7,5x18	67	Image Rock	50	50	0	3324,-	**OE-fit**	B,C,D
			8x18	68	BM Macho	45	50	10	3300,-		D
			8x18	69	BM Macho M.Blk	45	50	10	3300,-		D
			9x20	68	BM Macho	40	50	20	4288,-		D
			9x20	69	BM Macho M.Blk	40	50	20	4288,-		D
			9x20	72	Ballistic Dakota	43	50	14	4624,-		D
			9x22	72	Ballistic Dakota	43	50	14	5128,-		D
MERCEDES				PCD: **4-100** Bolt - Mutter: **12x1,50B** CB: **60,1**							
Citan (X) 4-bult	09.12-	14-18	5,5x14	45	Image Ride	38	45	14	1392,-		
			6x15	19	ATS Streetrallye Slv	38	45	14	1960,-		
			6x15	34	CSP 16	40	45	10	1228,-	**OE-fit**	B,D
			6x15	35	CSP 16 M.Gun	40	45	10	1228,-	**OE-fit**	B,D
			6x15	37	Image Comet	40	45	10	1316,-	**OE-fit**	B,D
			6x15	38	Image Comet Slv	40	45	10	1316,-	**OE-fit**	B,D
			6x15	42	Image Brio	40	45	10	1304,-		B
			6x15	45	Image Ride	38	45	14	1552,-		
			6x16	37	Image Comet	40	45	10	1536,-	**OE-fit**	B,D
			6x16	38	Image Comet Slv	40	45	10	1536,-	**OE-fit**	B,D
			6,5x16	19	ATS Streetrallye Slv	40	45	10	2240,-		
			6,5x16	34	CSP 16	40	45	10	1468,-	**OE-fit**	B,D
			6,5x16	42	Image Brio	38	45	14	1524,-		B
			7x17	42	Image Brio	40	45	10	1832,-		B
MERCEDES				PCD: **5-108** Bolt - Mutter: **12x1,50B** CB: **60,1**							
Citan (X) 5-bult	09.12-	15-20	6x15	17	BM Drive M.Gun	40	44	8	1276,-		
			6x15	48	Image Motion	40	44	8	1224,-		
			6x15	49	Image Motion G.Gun	40	44	8	1224,-		
			6,5x16	36	Image Colt	40	44	8	1624,-		B
			6,5x16	92	Image Colt L.Gun	40	44	8	1548,-		B
			7x16	17	BM Drive M.Gun	40	44	8	1476,-		
			7x16	40	Image Spirit	40	44	8	1264,-		B
			7x16	46	Image Stella	40	44	8	1548,-		B
			7x16	47	Image Stella M.Blk	40	44	8	1548,-		B
			7x16	48	Image Motion	40	44	8	1468,-		
			7x16	49	Image Motion G.Gun	40	44	8	1468,-		
			7x16	50	Image Legend	40	44	8	1544,-		B
			7x17	40	Image Spirit	42	44	4	1476,-		B
			7x17	46	Image Stella	42	44	4	1812,-		B
			7x17	47	Image Stella M.Blk	42	44	4	1812,-		B
			7x17	48	Image Motion	40	44	8	1736,-		
			7x17	49	Image Motion G.Gun	40	44	8	1736,-		
			7,5x17	9	Nitro Sabre G.Blk	45	44	-2	3052,-		B
			7,5x17	36	Image Colt	40	44	8	1956,-		B
			7,5x17	46	Image Stella	42	44	4	1812,-		B
			7,5x17	47	Image Stella M.Blk	42	44	4	1812,-		B
			7,5x17	50	Image Legend	40	44	8	1812,-		B
			7,5x17	92	Image Colt L.Gun	40	44	8	1876,-		B
			8x17	9	Nitro Sabre G.Blk	42	44	4	3108,-		B
			8x17	17	BM Drive M.Gun	42	44	4	1736,-		
			8x17	48	Image Motion	42	44	4	1736,-		
			8x17	49	Image Motion G.Gun	42	44	4	1736,-		
			8x18	2	Nitro Sapphire FF	42	44	4	4036,-		B
			8x18	7	Nitro Spark G.Blk/Grey	45	44	-2	3476,-		B
			8x18	8	Nitro Spark G.Blk/Red	45	44	-2	3476,-		B
			8x18	9	Nitro Sabre G.Blk	42	44	4	3496,-		B
			8x18	10	Nitro Demon H.Slv	40	44	8	2972,-		
			8x18	11	Nitro Demon	40	44	8	2784,-		
			8x18	16	Advanti Inizio DST	42	44	4	3828,-		B
			8x18	17	BM Drive M.Gun	42	44	4	2296,-		
			8x18	36	Image Colt	42	44	4	2412,-		B
			8x18	46	Image Stella	42	44	4	2276,-		B
			8x18	47	Image Stella M.Blk	42	44	4	2276,-		B
			8x18	48	Image Motion	42	44	4	2204,-		
			8x18	49	Image Motion G.Gun	42	44	4	2204,-		
			8x18	92	Image Colt L.Gun	42	44	4	2296,-		B
			8x19	2	Nitro Sapphire FF	42	44	4	4684,-		B
			8x19	3	Nitro Turismo FF	42	44	4	4492,-		B
			8x19	4	Nitro Turismo FF G.Gun/Pol	42	44	4	4644,-		B
			8x19	10	Nitro Demon H.Slv	40	44	8	3624,-		
			8x19	11	Nitro Demon	40	44	8	3376,-		
			8x19	16	Advanti Inizio DST	42	44	4	4412,-		B
			8x19	48	Image Motion	42	44	4	2532,-		
			8x19	49	Image Motion G.Gun	42	44	4	2532,-		

Forts. neste side »

Bilmerke - Bilmodell	Årsmodell	Dimensjon	Felgdim.	Bilde	Felgmodell	ET Felg	ET Bil	Avvik ET	Veil. Pris eks. MVA	Merknader	B,C D, M
MERCEDES (forts.)			PCD: **5-108** Bolt - Mutter: **12x1,50B** CB: **60,1**								
			8x20	3	Nitro Turismo FF	45	44	-2	4812,-		B
			8x20	4	Nitro Turismo FF G.Gun/Pol	45	44	-2	4964,-		B
MERCEDES			PCD: **5-112** Bolt - Mutter: **14x1,50B** CB: **66,6**								
Viano (W639)	09.03-04.14	16-20	6,5x16	32	CSP 15	50	60	20	1736,-		C,D
Viano 350 17"			6,5x16	33	CSP 15 M.Blk	50	60	20	1736,-		C,D
Vito (W638)	03.96-08.03	15-18	6,5x16	54	Image Vector	50	60	20	1956,-	**OE-fit**	B,D
Vito (W639)	09.03-09.14	16-20	7,5x16	24	ATS Mizar	45	60	30	1812,-		C,D
			7,5x16	25	ATS Mizar G.Blk	45	60	30	1880,-		C,D
			7x17	24	ATS Mizar	48	60	24	2268,-		C,D
			7x17	25	ATS Mizar G.Blk	48	60	24	2340,-		C,D
			7x17	32	CSP 15	50	60	20	2132,-		C,D
			7x17	33	CSP 15 M.Blk	50	60	20	2132,-		C,D
			7x17	54	Image Vector	50	60	20	2576,-	**OE-fit**	B,D
			7x17	55	Image Vector Slv	50	60	20	2576,-	**OE-fit**	B,D
			8x17	24	ATS Mizar	48	60	24	2268,-		C,D
			8x17	25	ATS Mizar G.Blk	48	60	24	2340,-		C,D
			8x18	7	Nitro Spark G.Blk/Grey	45	60	30	3476,-	Maks bel. 750 kg	C,D
			8x18	8	Nitro Spark G.Blk/Red	45	60	30	3476,-	Maks bel. 750 kg	C,D
			8,5x18	24	ATS Mizar	48	60	24	3016,-		C,D
			8,5x18	25	ATS Mizar G.Blk	48	60	24	3116,-		C,D
			8x19	24	ATS Mizar	52	60	16	3720,-	Maks bel. 890 kg	C,D
			8x19	25	ATS Mizar G.Blk	52	60	16	3868,-	Maks bel. 890 kg	C,D
			8,5x19	96	Image Colt SUV G.Blk/Pol	50	60	20	3492,-	Maks bel. 1026 kg	
			8,5x19	97	Image Colt SUV L.Gun	50	60	20	3396,-	Maks bel. 1026 kg	D
			9x19	10	Nitro Demon H.Slv	45	60	30	3624,-	Maks bel. 950 kg	D,M
			9x19	11	Nitro Demon	45	60	30	3376,-	Maks bel. 950 kg	D,M
			9x19	12	Nitro Edge M.Blk	48	60	24	3884,-		D,M
			8,5x20	7	Nitro Spark G.Blk/Grey	45	60	30	4660,-	Maks bel. 750 kg	D
			8,5x20	8	Nitro Spark G.Blk/Red	45	60	30	4660,-	Maks bel. 750 kg	D
			9x20	10	Nitro Demon H.Slv	48	60	24	4104,-	Maks bel. 950 kg	D,M
			9x20	12	Nitro Edge M.Blk	48	60	24	4220,-		D,M
MERCEDES			PCD: **5-112** Bolt - Mutter: **14x1,50B** CB: **66,5**								
V-Class (W447)	05.14-	16-20	6,5x16	32	CSP 15	50	52	4	1736,-		C,D
V250CDI 17"			6,5x16	33	CSP 15 M.Blk	50	52	4	1736,-		C,D
Vito (W640)	10.14-	16-20	6,5x16	54	Image Vector	50	52	4	1956,-	**OE-fit**	B,D
119 BlueTEC (140kW) 17"			7x17	32	CSP 15	50	52	4	2132,-		C,D
			7x17	33	CSP 15 M.Blk	50	52	4	2132,-		C,D
			7x17	54	Image Vector	50	52	4	2576,-	**OE-fit**	B,D
			7x17	55	Image Vector Slv	50	52	4	2576,-	**OE-fit**	B,D
			8x18	7	Nitro Spark G.Blk/Grey	45	52	14	3476,-	Maks bel. 750 kg	C,D
			8x18	8	Nitro Spark G.Blk/Red	45	52	14	3476,-	Maks bel. 750 kg	C,D
			8x18	53	Nitro Hammer	48	52	8	3256,-		D
			8x19	24	ATS Mizar	52	52	0	3720,-	**OE-fit**, Maks bel. 890 kg	B,C,D
			8x19	25	ATS Mizar G.Blk	52	52	0	3868,-	**OE-fit**, Maks bel. 890 kg	B,C,D
			8,5x19	96	Image Colt SUV G.Blk/Pol	50	52	4	3492,-	Maks bel. 1026 kg	D
			8,5x19	97	Image Colt SUV L.Gun	50	52	4	3396,-	Maks bel. 1026 kg	D
			9x19	3	Nitro Turismo FF	45	52	14	4660,-	Maks bel. 850 kg	D,M
			9x19	4	Nitro Turismo FF G.Gun/Pol	45	52	14	4812,-	Maks bel. 850 kg	D,M
			9x19	10	Nitro Demon H.Slv	45	52	14	3624,-	Maks bel. 950 kg	D,M
			9x19	11	Nitro Demon	45	52	14	3376,-	Maks bel. 950 kg	D,M
			9x19	12	Nitro Edge M.Blk	48	52	8	3884,-		D,M
			8,5x20	3	Nitro Turismo FF	43	52	18	4812,-	Maks bel. 850 kg	D
			8,5x20	4	Nitro Turismo FF G.Gun/Pol	43	52	18	4964,-	Maks bel. 850 kg	D
			8,5x20	7	Nitro Spark G.Blk/Grey	45	52	14	4660,-	Maks bel. 750 kg	D
			8,5x20	8	Nitro Spark G.Blk/Red	45	52	14	4660,-	Maks bel. 750 kg	D
			8,5x20	24	ATS Mizar	40	52	24	5948,-	Maks bel. 1000 kg	C,D
			8,5x20	25	ATS Mizar G.Blk	40	52	24	6020,-	Maks bel. 1000 kg	C,D
			8,5x20	53	Nitro Hammer	48	52	8	4268,-		D
			9x20	10	Nitro Demon H.Slv	48	52	8	4104,-	Maks bel. 950 kg	D,M
			9x20	12	Nitro Edge M.Blk	48	52	8	4220,-		D,M
			9x20	96	Image Colt SUV G.Blk/Pol	52	52	0	4124,-	Maks bel. 1026 kg	D
			9x20	97	Image Colt SUV L.Gun	52	52	0	4008,-	Maks bel. 1026 kg	D
			9x22	12	Nitro Edge M.Blk	48	52	8	4888,-		D,M
MERCEDES			PCD: **5-130** Bolt - Mutter: **14x1,50B** CB: **84,1**								
Sprinter	02.95-12.99	15-17	6x15	65	CSP Work	50	75	50	2196,-	Maks bel. 955 kg	D
Sprinter	01.00-04.06	15-18									
MERCEDES			PCD: **6-130** Bolt - Mutter: **14x1,50B** CB: **84,1**								
Sprinter 200/300-Series	05.06-06.13	16-20	6,5x16	58	Image Strong	62	62	0	2500,-		D
Sprinter 200/300-Series	07.13-05.18	16-22	6,5x16	59	Image Strong M.Gun	62	62	0	2500,-		D
Sprinter fwd 200/300/400-Series	06.18-	16-20	6,5x17	58	Image Strong	62	62	0	2884,-		D
			6,5x17	59	Image Strong M.Gun	62	62	0	2884,-		D
			7,5x17	67	Image Rock	55	62	14	2796,-	Maks bel. 955 kg	D
			7,5x18	67	Image Rock	55	62	14	3324,-	Maks bel. 955 kg	D
			9x20	72	Ballistic Dakota	52	62	20	4624,-	Maks bel. 955 kg	D,M
MERCEDES			PCD: **6-130** Bolt - Mutter: **14x1,50B** CB: **84,1**								
Sprinter rwd 300/400-Series	06.18-	16-20	6,5x16	58	Image Strong	54	54	0	2500,-		D
4wd			6,5x16	59	Image Strong M.Gun	54	54	0	2500,-		D
			6,5x17	58	Image Strong	54	54	0	2884,-		D
			6,5x17	59	Image Strong M.Gun	54	54	0	2884,-		D
			7,5x17	67	Image Rock	55	54	-2	2796,-	Maks bel. 955 kg	D
			7,5x18	67	Image Rock	55	54	-2	3324,-	Maks bel. 955 kg	D
			9x20	72	Ballistic Dakota	52	54	4	4624,-	Maks bel. 955 kg	D,M
MERCURY			PCD: **5-108** Bolt - Mutter: **12x1,50** CB: **63,4**								
Cougar XR7	94-98	15-18	6,5x16	36	Image Colt	40	42	4	1624,-		
Mystique	95-00	15-18	6,5x16	92	Image Colt L.Gun	40	42	4	1548,-		
Sable	92-01	15-18									

Bilmerke - Bilmodell	Årsmodell	Dimensjon	Felgdim.	Bilde	Felgmodell	ET Felg	ET Bil	Avvik ET	Veil. Pris eks. MVA	Merknader	B,C D, M
MG				PCD: **4-100** Bolt - Mutter: **12x1,50** CB: **56,1**							
ZR	01-01.06	16-18	6,5x16	19	ATS Streetrallye Slv	40	45	10	2240,-		
ZS	01-01.06	16-18	6,5x16	34	CSP 16	40	45	10	1468,-		
			6,5x16	42	Image Brio	38	45	14	1524,-		
			7x17	42	Image Brio	40	45	10	1832,-		
MG				PCD: **5-100** Bolt - Mutter: **14x1,50B** CB: **56,1**							
ZT	01-01.06	17-19	7,5x17	36	Image Colt	43	50	14	1956,-		
			7,5x17	92	Image Colt L.Gun	43	50	14	1876,-		
MG				PCD: **5-112** Bolt - Mutter: **14x1,50B** CB: **57,1**							
ZS EV	10.19-	16-19	6,5x16	20	ATS Antares	41	41	0	1852,-		D
			6,5x16	21	ATS Antares G.Blk	41	41	0	1896,-		D
			6,5x16	29	CSP 13	41	41	0	1716,-		D
			6,5x16	30	CSP 13 M.Gun	41	41	0	1716,-		D
			6,5x16	36	Image Colt	35	41	12	1624,-		
			6,5x16	40	Image Spirit	41	41	0	1264,-		D
			6,5x16	46	Image Stella	41	41	0	1548,-		D
			6,5x16	47	Image Stella M.Blk	41	41	0	1548,-		D
			6,5x16	48	Image Motion	41	41	0	1468,-		D
			6,5x16	50	Image Legend	41	41	0	1544,-		D
			6,5x16	92	Image Colt L.Gun	35	41	12	1548,-		
			7x16	17	BM Drive M.Gun	38	41	6	1476,-		D
			7x17	17	BM Drive M.Gun	40	41	2	1736,-		D
			7x17	20	ATS Antares	40	41	2	2264,-		D
			7x17	21	ATS Antares G.Blk	40	41	2	2380,-		D
			7x17	29	CSP 13	40	41	2	2152,-		D
			7x17	30	CSP 13 M.Gun	40	41	2	2152,-		D
			7x17	40	Image Spirit	40	41	2	1476,-		D
			7x17	46	Image Stella	40	41	2	1812,-		D
			7x17	47	Image Stella M.Blk	40	41	2	1812,-		D
			7x17	48	Image Motion	40	41	2	1736,-		D
			7x17	49	Image Motion G.Gun	40	41	2	1736,-		D
			7,5x17	36	Image Colt	35	41	12	1956,-		
			7,5x17	50	Image Legend	40	41	2	1812,-		D
			7,5x17	92	Image Colt L.Gun	35	41	12	1876,-		
			7,5x18	29	CSP 13	35	41	12	2932,-		D
			7,5x18	30	CSP 13 M.Gun	35	41	12	2932,-		D
MINI				PCD: **4-100** Bolt - Mutter: **12x1,50B** CB: **56,1**							
Cooper	10.01-10.06	15-19	6x15	19	ATS Streetrallye Slv	45	45	0	1960,-		
Cooper S	10.01-10.06	16-19	6x15	37	Image Comet	40	45	10	1316,-		B
			6x15	38	Image Comet Slv	40	45	10	1316,-		B
			6x15	42	Image Brio	40	45	10	1304,-		B
			6x15	45	Image Ride	38	45	14	1552,-		
			6x16	19	ATS Streetrallye Slv	45	45	0	2240,-		
			6x16	37	Image Comet	40	45	10	1536,-		B
			6x16	38	Image Comet Slv	40	45	10	1536,-		B
			6,5x16	19	ATS Streetrallye Slv	40	45	10	2240,-		
			6,5x16	34	CSP 16	40	45	10	1468,-		
			6,5x16	42	Image Brio	38	45	14	1524,-		B
			7x17	18	ATS Streetrallye Blk	45	45	0	3344,-		
			7x17	42	Image Brio	40	45	10	1832,-		B
MINI				PCD: **4-100** Bolt - Mutter: **14x1,25B** CB: **56,1**							
Cooper Clubman	10.07-08.15	15-19	6x15	19	ATS Streetrallye Slv	45	48	6	1960,-		
Cooper Clubman S	10.07-08.15	16-19	6x15	37	Image Comet	40	48	16	1316,-		B
JCW 17"			6x15	38	Image Comet Slv	40	48	16	1316,-		B
Cooper II	11.06-02.14	15-19	6x15	42	Image Brio	40	48	16	1304,-		B
Cooper II S	10.06-02.14	16-19	6x15	45	Image Ride	38	48	20	1552,-		
JCW 17"			6x16	19	ATS Streetrallye Slv	45	48	6	2240,-		
Coupe	10.11-	15-19	6x16	37	Image Comet	40	48	16	1536,-		B
S, SD 16"			6x16	38	Image Comet Slv	40	48	16	1536,-		B
JCW 17"			6,5x16	19	ATS Streetrallye Slv	40	48	16	2240,-		
			6,5x16	34	CSP 16	40	48	16	1468,-		
			6,5x16	42	Image Brio	38	48	20	1524,-		B
			7x17	18	ATS Streetrallye Blk	45	48	6	3344,-		
			7x17	42	Image Brio	40	48	16	1832,-		B
MINI				PCD: **5-112** Bolt - Mutter: **14x1,25B** CB: **66,5**							
Cooper (UKL-L)	03.14-	15-19	6x15	48	Image Motion	45	46	2	1224,-	**OE-fit**	B,D
Cooper (UKL-L) One	03.14-	15-19	6,5x16	26	CSP 18 G.Blk/pol	46	46	0	1896,-	**OE-fit**	B,C,D
Cooper (UKL-L) S	03.14-	16-19	6,5x16	27	CSP 18	46	46	0	1760,-	**OE-fit**	B,C,D
SD 16"			6,5x16	28	CSP 18 G.Blk	46	46	0	1760,-	**OE-fit**	B,C,D
Cooper (UKL-L) SE electric	02.20-	16-17	6,5x16	36	Image Colt	45	46	2	1624,-		D
			6,5x16	92	Image Colt L.Gun	45	46	2	1548,-		D
			7x16	22	ATS Evolution	52	46	-12	1808,-	**OE-fit**	B,C,D
			7x16	23	ATS Evolution G.Grey	52	46	-12	1884,-	**OE-fit**	B,C,D
			7x16	46	Image Stella	47	46	-2	1548,-	**OE-fit**	B,D
			7x16	47	Image Stella M.Blk	47	46	-2	1548,-	**OE-fit**	B,D
			7x16	48	Image Motion	47	46	-2	1468,-	**OE-fit**	B,D
			7x16	49	Image Motion G.Gun	47	46	-2	1468,-	**OE-fit**	B,D
			7x17	48	Image Motion	47	46	-2	1736,-	**OE-fit**	B,D
			7x17	49	Image Motion G.Gun	47	46	-2	1736,-	**OE-fit**	B,D
			7,5x17	9	Nitro Sabre G.Blk	45	46	2	3052,-		D
			7,5x17	22	ATS Evolution	52	46	-12	2268,-	**OE-fit**	B,C,D
			7,5x17	23	ATS Evolution G.Grey	52	46	-12	2340,-	**OE-fit**	B,C,D
			7,5x17	26	CSP 18 G.Blk/pol	52	46	-12	2272,-	**OE-fit**	B,C,D
			7,5x17	27	CSP 18	52	46	-12	2200,-	**OE-fit**	B,C,D
			7,5x17	28	CSP 18 G.Blk	52	46	-12	2200,-	**OE-fit**	B,C,D
			7,5x17	36	Image Colt	45	46	2	1956,-		D

Forts. neste side »

Bilmerke - Bilmodell	Årsmodell	Dimensjon	Felgdim.	Bilde	Felgmodell	ET Felg	ET Bil	Avvik ET	Veil. Pris eks. MVA	Merknader	B,C D, M
MINI (forts.)			PCD: **5-112** Bolt - Mutter: **14x1,25B** CB: **66,5**								
			7,5x17	46	Image Stella	52	46	-12	1812,-	**OE-fit**	B,D
			7,5x17	47	Image Stella M.Blk	52	46	-12	1812,-	**OE-fit**	B,D
			7,5x17	50	Image Legend	47	46	-2	1812,-	**OE-fit**	B,D
			7,5x17	92	Image Colt L.Gun	45	46	2	1876,-		D
			7,5x17	230	Breyton BR-I Slv	52	46	-12	2196,-	**OE-fit**	B,C,D
			7,5x17	231	Breyton BR-I M.Blk	52	46	-12	2196,-	**OE-fit**	B,C,D
			8x17	17	BM Drive M.Gun	45	46	2	1736,-		D
			7,5x18	2	Nitro Sapphire FF	48	46	-4	3944,-		D
			7,5x18	46	Image Stella	52	46	-12	2276,-	**OE-fit**	B,D
			7,5x18	47	Image Stella M.Blk	52	46	-12	2276,-	**OE-fit**	B,D
			7,5x18	230	Breyton BR-I Slv	51	46	-10	2348,-	**OE-fit**	B,C,D
			7,5x18	231	Breyton BR-I M.Blk	51	46	-10	2348,-	**OE-fit**	B,C,D
			8x18	7	Nitro Spark G.Blk/Grey	45	46	2	3476,-		D
			8x18	8	Nitro Spark G.Blk/Red	45	46	2	3476,-		D
			8x18	10	Nitro Demon H.Slv	47	46	-2	2972,-		D
			8x18	11	Nitro Demon	47	46	-2	2784,-		D
			8x18	16	Advanti Inizio DST	45	46	2	3828,-		D
			8x18	17	BM Drive M.Gun	45	46	2	2296,-		D
			8x18	22	ATS Evolution	57	46	-22	3016,-	**OE-fit**	B,C,D
			8x18	23	ATS Evolution G.Grey	57	46	-22	3116,-	**OE-fit**	B,C,D
			8x18	26	CSP 18 G.Blk/pol	47	46	-2	2956,-	**OE-fit**	B,C,D
			8x18	27	CSP 18	47	46	-2	2972,-	**OE-fit**	B,C,D
			8x18	28	CSP 18 G.Blk	47	46	-2	2972,-	**OE-fit**	B,C,D
			8x18	36	Image Colt	45	46	2	2412,-		D
			8x18	48	Image Motion	45	46	2	2204,-		D
			8x18	50	Image Legend	47	46	-2	2276,-	**OE-fit**	B,D
			8x18	92	Image Colt L.Gun	45	46	2	2296,-		D
			7,5x19	2	Nitro Sapphire FF	48	46	-4	4572,-		D
			8x19	4	Nitro Turismo FF G.Gun/Pol	47	46	-2	4644,-	**OE-fit**	B,C,D
			8x19	10	Nitro Demon H.Slv	47	46	-2	3624,-		D
			8x19	11	Nitro Demon	47	46	-2	3376,-		D
			8x19	16	Advanti Inizio DST	45	46	2	4412,-		D
			8x19	26	CSP 18 G.Blk/pol	47	46	-2	3596,-	**OE-fit**	B,C,D
			8x19	27	CSP 18	47	46	-2	3444,-	**OE-fit**	B,C,D
			8x19	28	CSP 18 G.Blk	47	46	-2	3444,-	**OE-fit**	B,C,D
			8x19	48	Image Motion	45	46	2	2532,-		D
			8x19	230	Breyton BR-I Slv	47	46	-2	2896,-	**OE-fit**	B,C,D
			8x19	231	Breyton BR-I M.Blk	47	46	-2	2896,-	**OE-fit**	B,C,D
			8x20	2	Nitro Sapphire FF	48	46	-4	5096,-		D
			8x20	4	Nitro Turismo FF G.Gun/Pol	47	46	-2	4964,-	**OE-fit**	B,D
MINI			PCD: **5-112** Bolt - Mutter: **14x1,25B** CB: **66,5**								
Cooper (UKL-L) JCW	03.14-	17-20	7,5x17	9	Nitro Sabre G.Blk	45	54	18	3052,-		D,M
John Cooper Works			8x17	17	BM Drive M.Gun	45	54	18	1736,-		D,M
			8x18	9	Nitro Sabre G.Blk	45	54	18	3496,-		D,M
			8x18	17	BM Drive M.Gun	45	54	18	2296,-		D,M
			8x19	4	Nitro Turismo FF G.Gun/Pol	47	54	14	4644,-	**OE-fit**	B,C,D
			8x20	4	Nitro Turismo FF G.Gun/Pol	47	54	14	4964,-	**OE-fit**	B,C,D
MINI			PCD: **5-112** Bolt - Mutter: **14x1,25B** CB: **66,5**								
Clubman (UKL-L)	09.15-	16-20	6,5x16	26	CSP 18 G.Blk/pol	46	52	12	1896,-	**OE-fit**	B,C,D
Clubman (UKL-L) S	09.15-	17-20	6,5x16	28	CSP 18 G.Blk	46	52	12	1760,-	**OE-fit**	B,C,D
			6,5x16	36	Image Colt	45	52	14	1624,-		D
			6,5x16	92	Image Colt L.Gun	45	52	14	1548,-		D
			7x16	17	BM Drive M.Gun	45	52	14	1476,-		D
			7x16	22	ATS Evolution	52	52	0	1808,-	**OE-fit**	B,C,D
			7x16	23	ATS Evolution G.Grey	52	52	0	1884,-	**OE-fit**	B,C,D
			7x16	46	Image Stella	47	52	10	1548,-	**OE-fit**	B,D
			7x16	47	Image Stella M.Blk	47	52	10	1548,-	**OE-fit**	B,D
			7x16	48	Image Motion	47	52	10	1468,-	**OE-fit**	B,D
			7x16	49	Image Motion G.Gun	47	52	10	1468,-	**OE-fit**	B,D
			7x16	50	Image Legend	45	52	14	1544,-		D
			7x17	48	Image Motion	47	52	10	1736,-	**OE-fit**	B,D
			7x17	49	Image Motion G.Gun	47	52	10	1736,-	**OE-fit**	B,D
			7,5x17	9	Nitro Sabre G.Blk	45	52	14	3052,-		D
			7,5x17	22	ATS Evolution	52	52	0	2268,-	**OE-fit**	B,C,D
			7,5x17	23	ATS Evolution G.Grey	52	52	0	2340,-	**OE-fit**	B,C,D
			7,5x17	26	CSP 18 G.Blk/pol	52	52	0	2272,-	**OE-fit**	B,C,D
			7,5x17	27	CSP 18	52	52	0	2200,-	**OE-fit**	B,C,D
			7,5x17	28	CSP 18 G.Blk	52	52	0	2200,-	**OE-fit**	B,C,D
			7,5x17	36	Image Colt	45	52	14	1956,-		D
			7,5x17	46	Image Stella	52	52	0	1812,-	**OE-fit**	B,D
			7,5x17	47	Image Stella M.Blk	52	52	0	1812,-	**OE-fit**	B,D
			7,5x17	50	Image Legend	47	52	10	1812,-	**OE-fit**	B,D
			7,5x17	92	Image Colt L.Gun	45	52	14	1876,-		D
			7,5x17	230	Breyton BR-I Slv	52	52	0	2196,-	**OE-fit**	B,C,D
			7,5x17	231	Breyton BR-I M.Blk	52	52	0	2196,-	**OE-fit**	B,C,D
			8x17	17	BM Drive M.Gun	45	52	14	1736,-		D
			7,5x18	2	Nitro Sapphire FF	48	52	8	3944,-		D
			7,5x18	22	ATS Evolution	51	52	2	3016,-	**OE-fit**	B,C,D
			7,5x18	23	ATS Evolution G.Grey	51	52	2	3116,-	**OE-fit**	B,C,D
			7,5x18	46	Image Stella	52	52	0	2276,-	**OE-fit**	B,D
			7,5x18	47	Image Stella M.Blk	52	52	0	2276,-	**OE-fit**	B,D
			7,5x18	230	Breyton BR-I Slv	51	52	2	2348,-	**OE-fit**	B,C,D
			7,5x18	231	Breyton BR-I M.Blk	51	52	2	2348,-	**OE-fit**	B,C,D
			8x18	7	Nitro Spark G.Blk/Grey	45	52	14	3476,-		D
			8x18	8	Nitro Spark G.Blk/Red	45	52	14	3476,-		D
			8x18	9	Nitro Sabre G.Blk	45	52	14	3496,-		D

Forts. neste side »

Bilmerke - Bilmodell	Årsmodell	Dimensjon	Felgdim.	Bilde	Felgmodell	ET Felg	ET Bil	Avvik ET	Veil. Pris eks. MVA	Merknader	B,C D, M
MINI (forts.)				PCD: **5-112** Bolt - Mutter: **14x1,25B**	CB: **66,5**						
			8x18	16	Advanti Inizio DST	45	52	14	3828,-		D
			8x18	17	BM Drive M.Gun	45	52	14	2296,-		D
			8x18	22	ATS Evolution	57	52	-10	3016,-	**OE-fit**	B,C,D
			8x18	23	ATS Evolution G.Grey	57	52	-10	3116,-	**OE-fit**	B,C,D
			8x18	26	CSP 18 G.Blk/pol	47	52	10	2956,-	**OE-fit**	B,C,D
			8x18	27	CSP 18	47	52	10	2972,-	**OE-fit**	B,C,D
			8x18	28	CSP 18 G.Blk	47	52	10	2972,-	**OE-fit**	B,C,D
			8x18	36	Image Colt	45	52	14	2412,-		D
			8x18	48	Image Motion	45	52	14	2204,-		D
			8x18	50	Image Legend	47	52	10	2276,-	**OE-fit**	B,D
			8x18	92	Image Colt L.Gun	45	52	14	2296,-		D
			7,5x19	2	Nitro Sapphire FF	48	52	8	4572,-		D
			8x19	4	Nitro Turismo FF G.Gun/Pol	47	52	10	4644,-	**OE-fit**	B,C,D
			8x19	16	Advanti Inizio DST	45	52	14	4412,-		D
			8x19	22	ATS Evolution	47	52	10	3892,-	**OE-fit**	B,C,D
			8x19	23	ATS Evolution G.Grey	47	52	10	4008,-	**OE-fit**	B,C,D
			8x19	26	CSP 18 G.Blk/pol	47	52	10	3596,-	**OE-fit**	B,C,D
			8x19	27	CSP 18	47	52	10	3444,-	**OE-fit**	B,C,D
			8x19	28	CSP 18 G.Blk	47	52	10	3444,-	**OE-fit**	B,C,D
			8x19	48	Image Motion	45	52	14	2532,-		D
			8x19	230	Breyton BR-I Slv	47	52	10	2896,-	**OE-fit**	B,C,D
			8x19	231	Breyton BR-I M.Blk	47	52	10	2896,-	**OE-fit**	B,C,D
			8x20	2	Nitro Sapphire FF	48	52	8	5096,-		D
			8x20	4	Nitro Turismo FF G.Gun/Pol	47	52	10	4964,-	**OE-fit**	B,C,D
MINI				PCD: **5-112** Bolt - Mutter: **14x1,25B**	CB: **66,5**						
Clubman (UKL-L) JCW	09.15-	17-20	7,5x17	9	Nitro Sabre G.Blk	45	47	4	3052,-		D
John Cooper Works			8x17	17	BM Drive M.Gun	45	47	4	1736,-		D
			8x18	9	Nitro Sabre G.Blk	45	47	4	3496,-		D
			8x18	17	BM Drive M.Gun	45	47	4	2296,-		D
			8x19	4	Nitro Turismo FF G.Gun/Pol	47	47	0	4644,-	**OE-fit**	B,C,D
			8x20	4	Nitro Turismo FF G.Gun/Pol	47	47	0	4964,-	**OE-fit**	B,C,D
MINI				PCD: **5-120** Bolt - Mutter: **14x1,25B**	CB: **72,5**						
Countryman (UKL/X)	08.10-12.16	16-20	7x16	22	ATS Evolution	40	50	20	1808,-	**OE-fit**	B,D
S, SD 17"			7x16	23	ATS Evolution G.Grey	40	50	20	1884,-	**OE-fit**	B,D
Paceman (UKL)	10.12-	16-20	7,5x17	22	ATS Evolution	43	50	14	2268,-	**OE-fit**	B,D
			7,5x17	23	ATS Evolution G.Grey	43	50	14	2340,-	**OE-fit**	B,D
			7,5x17	26	CSP 18 G.Blk/pol	43	50	14	2272,-	**OE-fit**	B,D
			7,5x17	27	CSP 18	43	50	14	2200,-	**OE-fit**	B,D
			7,5x17	28	CSP 18 G.Blk	43	50	14	2200,-	**OE-fit**	B,D
			8x18	22	ATS Evolution	43	50	14	3016,-	**OE-fit**	B,D
			8x18	23	ATS Evolution G.Grey	43	50	14	3116,-	**OE-fit**	B,D
			8x18	26	CSP 18 G.Blk/pol	45	50	10	2956,-	**OE-fit**	B,D
			8x18	27	CSP 18	45	50	10	2972,-	**OE-fit**	B,D
			8x18	28	CSP 18 G.Blk	45	50	10	2972,-	**OE-fit**	B,D
MINI				PCD: **5-112** Bolt - Mutter: **14x1,25B**	CB: **66,5**						
Countryman (F60)	01.17-	16-20	6,5x16	26	CSP 18 G.Blk/pol	46	52	12	1896,-	**OE-fit**	B,C,D
Hybrid 17"			6,5x16	27	CSP 18	46	52	12	1760,-	**OE-fit**	B,C,D
JCW 17"			6,5x16	28	CSP 18 G.Blk	46	52	12	1760,-	**OE-fit**	B,C,D
			6,5x16	36	Image Colt	45	52	14	1624,-		D
			6,5x16	92	Image Colt L.Gun	45	52	14	1548,-		D
			7x16	22	ATS Evolution	52	52	0	1808,-	**OE-fit**	B,C,D
			7x16	23	ATS Evolution G.Grey	52	52	0	1884,-	**OE-fit**	B,C,D
			7x16	46	Image Stella	47	52	10	1548,-	**OE-fit**	B,D
			7x16	47	Image Stella M.Blk	47	52	10	1548,-	**OE-fit**	B,D
			7x17	48	Image Motion	47	52	10	1736,-	**OE-fit**	B,D
			7x17	49	Image Motion G.Gun	47	52	10	1736,-	**OE-fit**	B,D
			7,5x17	9	Nitro Sabre G.Blk	45	52	14	3052,-		D
			7,5x17	22	ATS Evolution	52	52	0	2268,-	**OE-fit**	B,C,D
			7,5x17	23	ATS Evolution G.Grey	52	52	0	2340,-	**OE-fit**	B,C,D
			7,5x17	26	CSP 18 G.Blk/pol	52	52	0	2272,-	**OE-fit**	B,C,D
			7,5x17	27	CSP 18	52	52	0	2200,-	**OE-fit**	B,C,D
			7,5x17	28	CSP 18 G.Blk	52	52	0	2200,-	**OE-fit**	B,C,D
			7,5x17	36	Image Colt	45	52	14	1956,-		D
			7,5x17	46	Image Stella	52	52	0	1812,-	**OE-fit**	B,D
			7,5x17	47	Image Stella M.Blk	52	52	0	1812,-	**OE-fit**	B,D
			7,5x17	50	Image Legend	47	52	10	1812,-	**OE-fit**	B,D
			7,5x17	92	Image Colt L.Gun	45	52	14	1876,-		D
			7,5x17	230	Breyton BR-I Slv	52	52	0	2196,-	**OE-fit**	B,C,D
			7,5x17	231	Breyton BR-I M.Blk	52	52	0	2196,-	**OE-fit**	B,C,D
			8x17	48	Image Motion	45	52	14	1736,-		D
			7,5x18	2	Nitro Sapphire FF	48	52	8	3944,-		D
			7,5x18	22	ATS Evolution	51	52	2	3016,-	**OE-fit**	B,C,D
			7,5x18	23	ATS Evolution G.Grey	51	52	2	3116,-	**OE-fit**	B,C,D
			7,5x18	46	Image Stella	52	52	0	2276,-	**OE-fit**	B,D
			7,5x18	47	Image Stella M.Blk	52	52	0	2276,-	**OE-fit**	B,D
			7,5x18	230	Breyton BR-I Slv	51	52	2	2348,-	**OE-fit**	B,C,D
			7,5x18	231	Breyton BR-I M.Blk	51	52	2	2348,-	**OE-fit**	B,C,D
			8x18	7	Nitro Spark G.Blk/Grey	45	52	14	3476,-		D
			8x18	8	Nitro Spark G.Blk/Red	45	52	14	3476,-		D
			8x18	9	Nitro Sabre G.Blk	45	52	14	3496,-		D
			8x18	10	Nitro Demon H.Slv	47	52	10	2972,-		D
			8x18	11	Nitro Demon	47	52	10	2784,-		D
			8x18	16	Advanti Inizio DST	45	52	14	3828,-		D
			8x18	17	BM Drive M.Gun	45	52	14	2296,-		D
			8x18	26	CSP 18 G.Blk/pol	47	52	10	2956,-	**OE-fit**	B,C,D

Forts. neste side »

Bilmerke - Bilmodell	Årsmodell	Dimensjon	Felgdim.	Bilde	Felgmodell	ET Felg	ET Bil	Avvik ET	Veil. Pris eks. MVA	Merknader	B,C D, M
MINI (forts.)			PCD: **5-112** Bolt - Mutter: **14x1,25B** CB: **66,5**								
			8x18	27	CSP 18	47	52	10	2972,-	**OE-fit**	B,C,D
			8x18	28	CSP 18 G.Blk	47	52	10	2972,-	**OE-fit**	B,C,D
			8x18	36	Image Colt	45	52	14	2412,-		D
			8x18	48	Image Motion	45	52	14	2204,-		D
			8x18	50	Image Legend	47	52	10	2276,-	**OE-fit**	B,D
			8x18	92	Image Colt L.Gun	45	52	14	2296,-		D
			7,5x19	2	Nitro Sapphire FF	48	52	8	4572,-		D
			8x19	4	Nitro Turismo FF G.Gun/Pol	47	52	10	4644,-	**OE-fit**	B,C,D
			8x19	10	Nitro Demon H.Slv	47	52	10	3624,-		D
			8x19	11	Nitro Demon	47	52	10	3376,-		D
			8x19	16	Advanti Inizio DST	45	52	14	4412,-		D
			8x19	22	ATS Evolution	47	52	10	3892,-	**OE-fit**	B,C,D
			8x19	23	ATS Evolution G.Grey	47	52	10	4008,-	**OE-fit**	B,C,D
			8x19	26	CSP 18 G.Blk/pol	47	52	10	3596,-	**OE-fit**	B,C,D
			8x19	27	CSP 18	47	52	10	3444,-	**OE-fit**	B,C,D
			8x19	28	CSP 18 G.Blk	47	52	10	3444,-	**OE-fit**	B,C,D
			8x19	48	Image Motion	45	52	14	2532,-		D
			8x19	230	Breyton BR-I Slv	47	52	10	2896,-	**OE-fit**	B,C,D
			8x19	231	Breyton BR-I M.Blk	47	52	10	2896,-	**OE-fit**	B,C,D
			8,5x19	5	Nitro Volcano G.Gun	45	52	14	4388,-		D
			8,5x19	6	Nitro Volcano	45	52	14	4632,-		D
			8,5x19	9	Nitro Sabre G.Blk	45	52	14	4292,-		D,M
			8,5x19	36	Image Colt	45	52	14	3028,-		D,M
			8,5x19	92	Image Colt L.Gun	45	52	14	2876,-		D,M
			8x20	2	Nitro Sapphire FF	48	52	8	5096,-		D
			8x20	4	Nitro Turismo FF G.Gun/Pol	47	52	10	4964,-	**OE-fit**	B,C,D
			8,5x20	5	Nitro Volcano G.Gun	45	52	14	4824,-		D,M
			8,5x20	6	Nitro Volcano	45	52	14	5164,-		D,M
			8,5x20	7	Nitro Spark G.Blk/Grey	45	52	14	4660,-		D,M
			8,5x20	8	Nitro Spark G.Blk/Red	45	52	14	4660,-		D,M
			8,5x20	9	Nitro Sabre G.Blk	45	52	14	4800,-		D,M
			8,5x20	10	Nitro Demon H.Slv	45	52	14	4104,-		D,M
			8,5x20	11	Nitro Demon	45	52	14	3808,-		D,M
			8,5x20	36	Image Colt	45	52	14	3432,-		D,M
			8,5x20	53	Nitro Hammer	48	52	8	4268,-		D,M
			8,5x20	92	Image Colt L.Gun	45	52	14	3276,-		D,M
MINI			PCD: **5-112** Bolt - Mutter: **14x1,25B** CB: **66,5**								
Countryman (F60) JCW	05.17-05.18	17-20	7,5x17	9	Nitro Sabre G.Blk	45	47	4	3052,-		D
John Cooper Works			8x17	17	BM Drive M.Gun	45	47	4	1736,-		D
Countryman (F60) JCW	05.19-	18-20	8x18	9	Nitro Sabre G.Blk	45	47	4	3496,-		D
John Cooper Works			8x18	17	BM Drive M.Gun	45	47	4	2296,-		D
			8x19	4	Nitro Turismo FF G.Gun/Pol	47	47	0	4644,-	**OE-fit**	B,C,D
			8x19	22	ATS Evolution	47	47	0	3892,-	**OE-fit**	B,C,D
			8x19	23	ATS Evolution G.Grey	47	47	0	4008,-	**OE-fit**	B,C,D
			8x19	48	Image Motion	45	47	4	2532,-		D
			8x20	4	Nitro Turismo FF G.Gun/Pol	47	47	0	4964,-	**OE-fit**	B,C,D
MITSUBISHI			PCD: **4-100** Bolt - Mutter: **12x1,50** CB: **56,1**								
Space Star (A00)	02.13-	14-16	5,5x14	45	Image Ride	38	46	16	1392,-		
			6x15	19	ATS Streetrallye Slv	38	46	16	1960,-		
			6x15	42	Image Brio	40	46	12	1304,-		
			6x15	45	Image Ride	38	46	16	1552,-		
MITSUBISHI			PCD: **4-100** Bolt - Mutter: **12x1,50** CB: **56,1**								
Carisma 1.6i	09.95-12.99	14-17	5x13	45	Image Ride	38	46	16	1336,-		
Colt	03.92-02.96	13-17	5,5x14	45	Image Ride	38	46	16	1392,-		
Colt	03.96-04.04	13-18	6x15	19	ATS Streetrallye Slv	38	46	16	1960,-		
Lancer	01.93-10.03	13-18	6x15	42	Image Brio	40	46	12	1304,-		
			6x15	45	Image Ride	38	46	16	1552,-		
			6x16	37	Image Comet	40	46	12	1536,-		
			6x16	38	Image Comet Slv	40	46	12	1536,-		
			6,5x16	34	CSP 16	40	46	12	1468,-		
			7x17	42	Image Brio	40	46	12	1832,-		
MITSUBISHI			PCD: **4-114,3** Bolt - Mutter: **12x1,50** CB: **67,1**								
Colt	05.04-10.08	14-18	6x15	37	Image Comet	40	46	12	1316,-		D
CZT Turbo 15"			6x15	38	Image Comet Slv	40	46	12	1316,-		D
Colt (Z30)	11.08-07.12	14-18	6x16	37	Image Comet	40	46	12	1536,-		
1.5, 1.5 Turbo 15"											
Colt (Z3B) cab	06.06-07.12	15-18									
MITSUBISHI			PCD: **4-114,3** Bolt - Mutter: **12x1,50** CB: **67,1**								
Carisma 1.6i, 1.8GDi, 1.9TD	01.00-05.01	15-18	6x15	37	Image Comet	40	46	12	1316,-		D
Carisma 1.8i	09.95-05.01	14-18	6x15	38	Image Comet Slv	40	46	12	1316,-		D
Galant	03.93-12.99	14-18	6x16	37	Image Comet	40	46	12	1536,-		
Galant	01.98-02.04	15-19									
Lancer 1.3i, 1.6i	11.03-01.08	15-19									
Space Runner	10.91-07.99	14-18									
Space Star	10.98-10.05	14-18									
Space Wagon	10.91-02.99	14-18									
MITSUBISHI			PCD: **5-114,3** Bolt - Mutter: **12x1,50** CB: **67,1**								
Grandis	04.04-12.10	16-20	6x15	34	CSP 16	46	46	0	1228,-		D
Lancer (CY0)	02.08-12.16	16-20	6x15	35	CSP 16 M.Gun	46	46	0	1228,-		D
Ralliart 17"			6x15	48	Image Motion	45	46	2	1224,-		D
Lancer 2.0i	11.03-01.08	15-19	6,5x16	34	CSP 16	45	46	2	1468,-		D
Sigma	03.91-02.97	15-19	6,5x16	35	CSP 16 M.Gun	45	46	2	1468,-		D
Space Wagon	03.99-03.04	15-19	6,5x16	36	Image Colt	45	46	2	1624,-		
			6,5x16	40	Image Spirit	45	46	2	1264,-		D
			6,5x16	46	Image Stella	45	46	2	1548,-		D

Forts. neste side »

Bilmerke - Bilmodell	Årsmodell	Dimensjon	Felgdim.	Bilde	Felgmodell	ET Felg	ET Bil	Avvik ET	Veil. Pris eks. MVA	Merknader	B,C D, M
MITSUBISHI (forts.)				PCD: **5-114,3** Bolt - Mutter: **12x1,50**		CB: **67,1**					
			6,5x16	47	Image Stella M.Blk	45	46	2	1548,-		D
			6,5x16	48	Image Motion	45	46	2	1468,-		D
			6,5x16	49	Image Motion G.Gun	45	46	2	1468,-		D
			6,5x16	50	Image Legend	45	46	2	1544,-		D
			6,5x16	92	Image Colt L.Gun	45	46	2	1548,-		
			7x16	17	BM Drive M.Gun	45	46	2	1476,-		D
			7x17	34	CSP 16	45	46	2	1836,-		D
			7x17	46	Image Stella	45	46	2	1812,-		D
			7x17	47	Image Stella M.Blk	45	46	2	1812,-		D
			7x17	48	Image Motion	45	46	2	1736,-		D
			7x17	49	Image Motion G.Gun	45	46	2	1736,-		D
			7,5x17	9	Nitro Sabre G.Blk	45	46	2	3052,-		
			7,5x17	36	Image Colt	45	46	2	1956,-		
			7,5x17	50	Image Legend	45	46	2	1812,-		D
			7,5x17	92	Image Colt L.Gun	45	46	2	1876,-		
			7,5x18	2	Nitro Sapphire FF	45	46	2	3944,-		
			7,5x18	46	Image Stella	45	46	2	2276,-		D
			7,5x18	47	Image Stella M.Blk	45	46	2	2276,-		D
			8x18	7	Nitro Spark G.Blk/Grey	45	46	2	3476,-		
			8x18	8	Nitro Spark G.Blk/Red	45	46	2	3476,-		
			8x18	9	Nitro Sabre G.Blk	45	46	2	3496,-		
			8x18	11	Nitro Demon	48	46	-4	2784,-		
			8x18	16	Advanti Inizio DST	45	46	2	3828,-		
			8x18	36	Image Colt	45	46	2	2412,-		
			8x18	48	Image Motion	45	46	2	2204,-		D
			8x18	49	Image Motion G.Gun	45	46	2	2204,-		D
			8x18	50	Image Legend	45	46	2	2276,-		D
			8x18	92	Image Colt L.Gun	45	46	2	2296,-		
			7,5x19	2	Nitro Sapphire FF	45	46	2	4572,-		
			8x19	16	Advanti Inizio DST	45	46	2	4412,-		
			8,5x19	5	Nitro Volcano G.Gun	45	46	2	4388,-	Ikke Space Wagon	M
			8,5x19	6	Nitro Volcano	45	46	2	4632,-	Ikke Space Wagon	M
			8,5x19	9	Nitro Sabre G.Blk	45	46	2	4292,-	Ikke Space Wagon	M
			8,5x19	36	Image Colt	45	46	2	3028,-		M
			8,5x19	92	Image Colt L.Gun	45	46	2	2876,-		M
			8x20	2	Nitro Sapphire FF	45	46	2	5096,-		
			8,5x20	5	Nitro Volcano G.Gun	45	46	2	4824,-	Ikke Space Wagon	M
			8,5x20	6	Nitro Volcano	45	46	2	5164,-	Ikke Space Wagon	M
			8,5x20	7	Nitro Spark G.Blk/Grey	45	46	2	4660,-	Ikke Space Wagon	M
			8,5x20	8	Nitro Spark G.Blk/Red	45	46	2	4660,-	Ikke Space Wagon	M
			8,5x20	9	Nitro Sabre G.Blk	45	46	2	4800,-	Ikke Space Wagon	M
			8,5x20	36	Image Colt	45	46	2	3432,-		M
			8,5x20	92	Image Colt L.Gun	45	46	2	3276,-		M
MITSUBISHI				PCD: **5-114,3** Bolt - Mutter: **12x1,50**		CB: **67,1**					
ASX (GA0)	06.10-	16-20	6,5x16	34	CSP 16	45	46	2	1468,-		D
Outlander	06.03-01.07	16-20	6,5x16	35	CSP 16 M.Gun	45	46	2	1468,-		D
Pajero Pinin	05.00-02.07	16-19	6,5x16	36	Image Colt	45	46	2	1624,-		
			6,5x16	40	Image Spirit	45	46	2	1264,-		D
			6,5x16	46	Image Stella	45	46	2	1548,-		D
			6,5x16	47	Image Stella M.Blk	45	46	2	1548,-		D
			6,5x16	48	Image Motion	45	46	2	1468,-		D
			6,5x16	49	Image Motion G.Gun	45	46	2	1468,-		D
			6,5x16	92	Image Colt L.Gun	45	46	2	1548,-		
			7x16	17	BM Drive M.Gun	45	46	2	1476,-		D
			7x17	17	BM Drive M.Gun	50	46	-8	1736,-		D
			7x17	34	CSP 16	45	46	2	1836,-		D
			7x17	46	Image Stella	45	46	2	1812,-		D
			7x17	47	Image Stella M.Blk	45	46	2	1812,-		D
			7x17	48	Image Motion	45	46	2	1736,-		D
			7x17	49	Image Motion G.Gun	45	46	2	1736,-		D
			7,5x17	9	Nitro Sabre G.Blk	45	46	2	3052,-		
			7,5x17	36	Image Colt	45	46	2	1956,-		
			7,5x17	50	Image Legend	45	46	2	1812,-		D
			7,5x17	92	Image Colt L.Gun	45	46	2	1876,-		
			7,5x18	2	Nitro Sapphire FF	45	46	2	3944,-		
			7,5x18	46	Image Stella	45	46	2	2276,-		D
			7,5x18	47	Image Stella M.Blk	45	46	2	2276,-		D
			8x18	7	Nitro Spark G.Blk/Grey	45	46	2	3476,-		
			8x18	8	Nitro Spark G.Blk/Red	45	46	2	3476,-		
			8x18	9	Nitro Sabre G.Blk	45	46	2	3496,-		
			8x18	11	Nitro Demon	48	46	-4	2784,-		
			8x18	16	Advanti Inizio DST	45	46	2	3828,-		
			8x18	36	Image Colt	45	46	2	2412,-		
			8x18	48	Image Motion	45	46	2	2204,-		D
			8x18	49	Image Motion G.Gun	45	46	2	2204,-		D
			8x18	50	Image Legend	45	46	2	2276,-		D
			8x18	92	Image Colt L.Gun	45	46	2	2296,-		
			7,5x19	2	Nitro Sapphire FF	45	46	2	4572,-		
			8x19	16	Advanti Inizio DST	45	46	2	4412,-		
			8,5x19	5	Nitro Volcano G.Gun	45	46	2	4388,-		M
			8,5x19	6	Nitro Volcano	45	46	2	4632,-		M
			8,5x19	9	Nitro Sabre G.Blk	45	46	2	4292,-		M
			8,5x19	36	Image Colt	45	46	2	3028,-		M
			8,5x19	92	Image Colt L.Gun	45	46	2	2876,-		M
			8x20	2	Nitro Sapphire FF	45	46	2	5096,-		
			8,5x20	5	Nitro Volcano G.Gun	45	46	2	4824,-		M

Forts. neste side »

Bilmerke - Bilmodell	Årsmodell	Dimensjon	Felgdim.	Bilde	Felgmodell	ET Felg	ET Bil	Avvik ET	Veil. Pris eks. MVA	Merknader	B,C D, M
MITSUBISHI (forts.)			PCD: **5-114,3** Bolt - Mutter: **12x1,50** CB: **67,1**								
			8,5x20	6	Nitro Volcano	45	46	2	5164,-		M
			8,5x20	7	Nitro Spark G.Blk/Grey	45	46	2	4660,-		M
			8,5x20	8	Nitro Spark G.Blk/Red	45	46	2	4660,-		M
			8,5x20	9	Nitro Sabre G.Blk	45	46	2	4800,-		M
			8,5x20	36	Image Colt	45	46	2	3432,-		M
			8,5x20	92	Image Colt L.Gun	45	46	2	3276,-		M
MITSUBISHI			PCD: **5-114,3** Bolt - Mutter: **12x1,50** CB: **67,1**								
Eclipse (GK0) cross	12.17-	17-21	6,5x16	34	CSP 16	38	38	0	1468,-	**OE-fit**, OE-mutter styrning/bricka	B,D
(Kun biler med 16" orig.			6,5x16	36	Image Colt	35	38	6	1624,-		
kan ha 16", andre 17")			6,5x16	48	Image Motion	38	38	0	1468,-	**OE-fit**, OE-mutter styrning/bricka	B,D
Outlander (CW0)	02.07-10.12	16-20	6,5x16	92	Image Colt L.Gun	35	38	6	1548,-		
Outlander (CW0)	11.12-07.18	16-21	7x17	34	CSP 16	38	38	0	1836,-	**OE-fit**, OE-mutter styrning/bricka	B,D
Outlander (CW0)	08.18-	16-21	7x17	40	Image Spirit	38	38	0	1476,-	**OE-fit**	B,D
(Kun biler med 16" orig.			7x17	46	Image Stella	38	38	0	1812,-	**OE-fit**	B,D
kan ha 16", andre 17")			7x17	47	Image Stella M.Blk	38	38	0	1812,-	**OE-fit**	B,D
			7x17	48	Image Motion	38	38	0	1736,-	**OE-fit**, OE-mutter styrning/bricka	B,D
			7,5x17	9	Nitro Sabre G.Blk	35	38	6	3052,-		
			7,5x17	36	Image Colt	35	38	6	1956,-		
			7,5x17	92	Image Colt L.Gun	35	38	6	1876,-		
			7,5x18	2	Nitro Sapphire FF	35	38	6	3944,-		
			7,5x18	34	CSP 16	38	38	0	2444,-	**OE-fit**, OE-mutter styrning/bricka	B,D
			7,5x18	46	Image Stella	38	38	0	2276,-	**OE-fit**	B,D
			7,5x18	47	Image Stella M.Blk	38	38	0	2276,-	**OE-fit**	B,D
			8x18	7	Nitro Spark G.Blk/Grey	35	38	6	3476,-		
			8x18	8	Nitro Spark G.Blk/Red	35	38	6	3476,-		
			8x18	9	Nitro Sabre G.Blk	35	38	6	3496,-		
			8x18	16	Advanti Inizio DST	35	38	6	3828,-		
			8x18	36	Image Colt	35	38	6	2412,-		
			8x18	92	Image Colt L.Gun	35	38	6	2296,-		
			7,5x19	2	Nitro Sapphire FF	35	38	6	4572,-		
			8x19	11	Nitro Demon	38	38	0	3376,-		
			8x19	16	Advanti Inizio DST	35	38	6	4412,-		
			8,5x19	5	Nitro Volcano G.Gun	35	38	6	4388,-		
			8,5x19	6	Nitro Volcano	35	38	6	4632,-		
			8,5x19	9	Nitro Sabre G.Blk	35	38	6	4292,-		M
			8,5x19	36	Image Colt	35	38	6	3028,-		M
			8,5x19	92	Image Colt L.Gun	35	38	6	2876,-		M
			8x20	2	Nitro Sapphire FF	35	38	6	5096,-		
			8,5x20	1	Nitro Throne FF	40	38	-4	5060,-		M
			8,5x20	5	Nitro Volcano G.Gun	35	38	6	4824,-		
			8,5x20	6	Nitro Volcano	35	38	6	5164,-		
			8,5x20	7	Nitro Spark G.Blk/Grey	35	38	6	4660,-		M
			8,5x20	8	Nitro Spark G.Blk/Red	35	38	6	4660,-		M
			8,5x20	9	Nitro Sabre G.Blk	35	38	6	4800,-		M
			8,5x20	11	Nitro Demon	38	38	0	3808,-		M
			8,5x20	36	Image Colt	35	38	6	3432,-		M
			8,5x20	92	Image Colt L.Gun	35	38	6	3276,-		M
			9x21	5	Nitro Volcano G.Gun	35	38	6	5540,-		M
			9x21	6	Nitro Volcano	35	38	6	5996,-		M
MITSUBISHI			PCD: **6-139,7** Bolt - Mutter: **12x1,50** CB: **107,4**								
L200 4wd	-00	15-20	8x16	78	Advanti Peak	5	22	34	2692,-		
Pajero	-99	15-20									
Pajero GLS/GLX	-99	15-20									
Pajero Sport	01.00-12.06	16-20									
MITSUBISHI			PCD: **6-139,7** Bolt - Mutter: **12x1,50** CB: **107,4**								
L200 4wd	01.01-12.05	16-22	8x16	78	Advanti Peak	5	10	10	2692,-		
Activity											
Evolution											
MITSUBISHI			PCD: **6-139,7** Bolt - Mutter: **12x1,50** CB: **67,1**								
L200 (KJ0T) 4wd	06.15-	16-22	7x16	68	BM Macho	35	38	6	2396,-		D
2,4DI-D+ (133kW) 17"			7x16	69	BM Macho M.Blk	35	38	6	2396,-		D
L200 4wd	01.06-05.15	16-22	7,5x17	67	Image Rock	38	38	0	2796,-	**OE-fit**	B,D
			7,5x17	68	BM Macho	35	38	6	2756,-		D
			7,5x17	69	BM Macho M.Blk	35	38	6	2756,-		D
			9x17	74	Ballistic Morax	12	38	52	4020,-		M
			7,5x18	67	Image Rock	38	38	0	3324,-	**OE-fit**	B,D
			8x18	68	BM Macho	35	38	6	3300,-		D
			8x18	69	BM Macho M.Blk	35	38	6	3300,-		D
			9x18	74	Ballistic Morax	12	38	52	4276,-		M
			9x20	68	BM Macho	35	38	6	4288,-		D
			9x20	69	BM Macho M.Blk	35	38	6	4288,-		D
			9x20	72	Ballistic Dakota	35	38	6	4624,-		D
			9x20	74	Ballistic Morax	12	38	52	4740,-		M
			9x22	72	Ballistic Dakota	35	38	6	5128,-		D
MITSUBISHI			PCD: **6-139,7** Bolt - Mutter: **12x1,50** CB: **67,1**								
Pajero Shogun	01.00-12.06	16-24	9x17	74	Ballistic Morax	12	46	68	4020,-		M
Pajero Wagon	01.00-12.06	16-24	9x18	74	Ballistic Morax	12	46	68	4276,-		M
			9x20	72	Ballistic Dakota	35	46	22	4624,-		D
			9x20	74	Ballistic Morax	12	46	68	4740,-		M
			9x22	72	Ballistic Dakota	35	46	22	5128,-		D

Bilmerke - Bilmodell	Årsmodell	Dimensjon	Felgdim.	Bilde	Felgmodell	ET Felg	ET Bil	Avvik ET	Veil. Pris eks. MVA	Merknader	B,C D, M
MITSUBISHI				PCD: **6-139,7** Bolt - Mutter: **12x1,50** CB: **67,1**							
Pajero	01.07-	17-26	7,5x17	67	Image Rock	38	46	16	2796,-	**OE-fit**	B,D
3.2DI-D, 3.8 V6			7,5x17	68	BM Macho	35	46	22	2756,-		D
			7,5x17	69	BM Macho M.Blk	35	46	22	2756,-		D
			7,5x18	67	Image Rock	38	46	16	3324,-	**OE-fit**	B,D
			8x18	68	BM Macho	35	46	22	3300,-		D
			8x18	69	BM Macho M.Blk	35	46	22	3300,-		D
			9x20	68	BM Macho	35	46	22	4288,-		D
			9x20	69	BM Macho M.Blk	35	46	22	4288,-		D
			9x20	72	Ballistic Dakota	35	46	22	4624,-		D
			9x22	72	Ballistic Dakota	35	46	22	5128,-		D
MOPEDBIL				PCD: **4-100** Bolt - Mutter: **10x1,50** CB:							
JDM	-	14-16	4,5x14	51	Image Rebel	17	30	26	1392,-		B
Ligier JS50	-	14-16	4,5x14	52	Image Rebel M.Blk	17	30	26	1392,-		B
Microcar	01.11-	14-16	5x15	51	Image Rebel	18	30	24	1660,-		B
			5x15	52	Image Rebel M.Blk	18	30	24	1660,-		B
MOPEDBIL				PCD: **4-100** Bolt - Mutter: **10x1,50** CB:							
Chatenet CH26	08-18	14-16	4,5x14	51	Image Rebel	28	30	4	1392,-		B
Chatenet CH40	18-	14-16	4,5x14	52	Image Rebel M.Blk	28	30	4	1392,-		B
Chatenet CH46	19-	14-16	5x15	51	Image Rebel	28	30	4	1660,-		B
			5x15	52	Image Rebel M.Blk	28	30	4	1660,-		B
MOPEDBIL				PCD: **4-115** Bolt - Mutter: **10x1,25** CB:							
Aixam	08-	14-16	4,5x14	51	Image Rebel	17	20	6	1392,-		B
Casalini M14	08-	14-16	4,5x14	52	Image Rebel M.Blk	17	20	6	1392,-		B
Casalini M20	17-	14-16	5x15	51	Image Rebel	18	20	4	1660,-		B
Minauto	-	14-16	5x15	52	Image Rebel M.Blk	18	20	4	1660,-		B
MOPEDBIL				PCD: **4-114,3** Bolt - Mutter: **10x1,50** CB:							
Bellier	-	14-16	4,5x14	51	Image Rebel	17	20	6	1392,-		
Microcar	-01.10	14-16	4,5x14	52	Image Rebel M.Blk	17	20	6	1392,-		
			5x15	51	Image Rebel	18	20	4	1660,-		
			5x15	52	Image Rebel M.Blk	18	20	4	1660,-		
NISSAN				PCD: **4-100** Bolt - Mutter: **12x1,25** CB: **54,1**							
Pixo	05.09-10.13	14-16	5,5x14	45	Image Ride	38	45	14	1392,-		
			6x15	19	ATS Streetrallye Slv	38	45	14	1960,-		
			6x15	42	Image Brio	40	45	10	1304,-		
			6x15	45	Image Ride	38	45	14	1552,-		
NISSAN				PCD: **4-100** Bolt - Mutter: **12x1,25** CB: **59,1**							
100NX	03.91-09.95	14-17	5x13	45	Image Ride	38	45	14	1336,-		
Almera (N15)	10.95-02.00	13-18	5,5x14	45	Image Ride	38	45	14	1392,-		
Micra	02.93-03.03	13-16	6x15	42	Image Brio	40	45	10	1304,-		
Sunny	03.91-09.95	13-17	6x15	45	Image Ride	38	45	14	1552,-		
1.6, 2.0GTI 14"			6,5x16	34	CSP 16	40	45	10	1468,-		
			6,5x16	42	Image Brio	38	45	14	1524,-		
			7x17	42	Image Brio	40	45	10	1832,-		
NISSAN				PCD: **4-100** Bolt - Mutter: **12x1,50B** CB: **60,1**							
Micra (K12)	04.03-05.10	14-17	5,5x14	45	Image Ride	38	45	14	1392,-		
1.4i, 1.5dCi, 1.6i 15"			6x15	19	ATS Streetrallye Slv	38	45	14	1960,-		
Micra (K12) cab	01.05-10.10	15-18	6x15	34	CSP 16	40	45	10	1228,-	**OE-fit**	B,D
Note (E11)	03.06-09.13	15-18	6x15	35	CSP 16 M.Gun	40	45	10	1228,-	**OE-fit**	B,D
			6x15	37	Image Comet	45	45	0	1316,-	**OE-fit**	B,D
			6x15	42	Image Brio	40	45	10	1304,-		B
			6x15	45	Image Ride	38	45	14	1552,-		
			6x16	37	Image Comet	40	45	10	1536,-	**OE-fit**	B,D
			6x16	38	Image Comet Slv	40	45	10	1536,-	**OE-fit**	B,D
			6,5x16	19	ATS Streetrallye Slv	40	45	10	2240,-		
			6,5x16	34	CSP 16	40	45	10	1468,-		D,M
			6,5x16	42	Image Brio	38	45	14	1524,-		M
			7x17	18	ATS Streetrallye Blk	45	45	0	3344,-		
			7x17	42	Image Brio	40	45	10	1832,-		M
			7,5x18	18	ATS Streetrallye Blk	38	45	14	4180,-		M
NISSAN				PCD: **4-100** Bolt - Mutter: **12x1,25** CB: **60,1**							
Micra (K13)	06.10-02.17	14-17	5,5x14	45	Image Ride	38	45	14	1392,-		
			5,5x15	34	CSP 16	50	45	-10	1228,-	**OE-fit**	B,D
			6x15	19	ATS Streetrallye Slv	45	45	0	1960,-		
			6x15	37	Image Comet	45	45	0	1316,-	**OE-fit**	B,D
			6x15	42	Image Brio	40	45	10	1304,-		B
			6x15	45	Image Ride	38	45	14	1552,-		
			6x16	19	ATS Streetrallye Slv	45	45	0	2240,-		
			6x16	37	Image Comet	40	45	10	1536,-	**OE-fit**	B,D
			6x16	38	Image Comet Slv	40	45	10	1536,-	**OE-fit**	B,D
			6,5x16	19	ATS Streetrallye Slv	40	45	10	2240,-		
			6,5x16	34	CSP 16	40	45	10	1468,-		D
			6,5x16	42	Image Brio	38	45	14	1524,-		B
			7x17	18	ATS Streetrallye Blk	45	45	0	3344,-		
			7x17	42	Image Brio	40	45	10	1832,-		B
NISSAN				PCD: **4-100** Bolt - Mutter: **12x1,50B** CB: **60,1**							
Micra (K14)	03.17-	15-18	6x15	19	ATS Streetrallye Slv	45	50	10	1960,-		
			6x15	34	CSP 16	40	50	20	1228,-		D
			6x15	35	CSP 16 M.Gun	40	50	20	1228,-		D
			6x15	37	Image Comet	45	50	10	1316,-	**OE-fit**	B,D
			6x15	42	Image Brio	40	50	20	1304,-		B
			6x15	45	Image Ride	38	50	24	1552,-		
			6x16	19	ATS Streetrallye Slv	45	50	10	2240,-		
			6x16	37	Image Comet	40	50	20	1536,-	**OE-fit**	B,D
			6x16	38	Image Comet Slv	40	50	20	1536,-	**OE-fit**	B,D

Forts. neste side »

Bilmerke - Bilmodell	Årsmodell	Dimensjon	Felgdim.	Bilde	Felgmodell	ET Felg	ET Bil	Avvik ET	Veil. Pris eks. MVA	Merknader	B,C D, M
NISSAN (forts.)				PCD: **4-100** Bolt - Mutter: **12x1,50B**	CB: **60,1**						
			6,5x16	19	ATS Streetrallye Slv	40	50	20	2240,-		
			6,5x16	34	CSP 16	40	50	20	1468,-		D
			6,5x16	42	Image Brio	38	50	24	1524,-		B,M
			7x17	18	ATS Streetrallye Blk	45	50	10	3344,-		
			7x17	42	Image Brio	40	50	20	1832,-		B
			7,5x18	18	ATS Streetrallye Blk	38	50	24	4180,-		M
NISSAN				PCD: **4-100** Bolt - Mutter: **12x1,25**	CB: **60,1**						
Note (E12)	10.13-07.19	15-18	6x15	19	ATS Streetrallye Slv	38	40	4	1960,-		
			6x15	34	CSP 16	40	40	0	1228,-	**OE-fit**	B,D
			6x15	35	CSP 16 M.Gun	40	40	0	1228,-	**OE-fit**	B,D
			6x15	37	Image Comet	40	40	0	1316,-	**OE-fit**	B,D
			6x15	38	Image Comet Slv	40	40	0	1316,-	**OE-fit**	B,D
			6x15	42	Image Brio	40	40	0	1304,-		B
			6x15	45	Image Ride	38	40	4	1552,-		
			6x16	37	Image Comet	40	40	0	1536,-	**OE-fit**	B,D
			6x16	38	Image Comet Slv	40	40	0	1536,-	**OE-fit**	B,D
			6,5x16	19	ATS Streetrallye Slv	40	40	0	2240,-		
			6,5x16	34	CSP 16	40	40	0	1468,-		D
			6,5x16	42	Image Brio	38	40	4	1524,-		B
			7x17	18	ATS Streetrallye Blk	45	40	-10	3344,-		
			7x17	42	Image Brio	40	40	0	1832,-		B
NISSAN				PCD: **4-114,3** Bolt - Mutter: **12x1,25**	CB: **66,1**						
Cube (Z12)	03.10-	15-18	6x15	37	Image Comet	40	42	4	1316,-		D
Tiida (C11)	09.07-	15-19	6x15	38	Image Comet Slv	40	42	4	1316,-		D
			6x16	37	Image Comet	40	42	4	1536,-		
NISSAN				PCD: **4-114,3** Bolt - Mutter: **12x1,25**	CB: **66,1**						
200SX (S13)	06.89-03.94	15-18	6x15	37	Image Comet	40	45	10	1316,-		D
Almera (N16)	03.00-12.06	15-19	6x15	38	Image Comet Slv	40	45	10	1316,-		D
Bluebird	10.83-03.98	14-18	6x16	37	Image Comet	40	45	10	1536,-		
Prairie	10.88-08.95	14-18									
Primera	09.90-03.98	14-18									
Primera (P11,W11)	04.98-02.02	15-19									
NISSAN				PCD: **5-114,3** Bolt - Mutter: **12x1,25**	CB: **66,1**						
Juke (F15)	10.10-07.14	16-20	6,5x16	34	CSP 16	40	40	0	1468,-	**OE-fit**	B,D
1.6 Turbo 17"			6,5x16	36	Image Colt	35	40	10	1624,-		
Juke (F15)	08.14-10.19	16-20	6,5x16	40	Image Spirit	40	40	0	1264,-	**OE-fit**	B,D
(Facelift)			6,5x16	46	Image Stella	40	40	0	1548,-	**OE-fit**	B,D
1.6 Turbo 17"			6,5x16	47	Image Stella M.Blk	40	40	0	1548,-	**OE-fit**	B,D
			6,5x16	48	Image Motion	40	40	0	1468,-	**OE-fit**	B,D
			6,5x16	49	Image Motion G.Gun	40	40	0	1468,-	**OE-fit**	B,D
			6,5x16	50	Image Legend	40	40	0	1544,-	**OE-fit**	B,D
			6,5x16	92	Image Colt L.Gun	35	40	10	1548,-		
			7x16	17	BM Drive M.Gun	40	40	0	1476,-		D
			7x17	17	BM Drive M.Gun	40	40	0	1736,-		D
			7x17	34	CSP 16	40	40	0	1836,-	**OE-fit**	B,D
			7x17	35	CSP 16 M.Gun	40	40	0	1836,-	**OE-fit**	B,D
			7x17	40	Image Spirit	40	40	0	1476,-	**OE-fit**	B,D
			7x17	46	Image Stella	40	40	0	1812,-	**OE-fit**	B,D
			7x17	47	Image Stella M.Blk	40	40	0	1812,-	**OE-fit**	B,D
			7x17	48	Image Motion	40	40	0	1736,-	**OE-fit**	B,D
			7x17	49	Image Motion G.Gun	40	40	0	1736,-	**OE-fit**	B,D
			7,5x17	9	Nitro Sabre G.Blk	35	40	10	3052,-		
			7,5x17	36	Image Colt	35	40	10	1956,-		
			7,5x17	50	Image Legend	40	40	0	1812,-	**OE-fit**	B,D
			7,5x17	92	Image Colt L.Gun	35	40	10	1876,-		
			7,5x18	2	Nitro Sapphire FF	35	40	10	3944,-		
			7,5x18	34	CSP 16	40	40	0	2444,-	**OE-fit**	B,D
			7,5x18	35	CSP 16 M.Gun	40	40	0	2444,-	**OE-fit**	B,D
			7,5x18	46	Image Stella	40	40	0	2276,-		D
			7,5x18	47	Image Stella M.Blk	40	40	0	2276,-		D
			8x18	7	Nitro Spark G.Blk/Grey	35	40	10	3476,-		
			8x18	8	Nitro Spark G.Blk/Red	35	40	10	3476,-		
			8x18	9	Nitro Sabre G.Blk	45	40	-10	3496,-		
			8x18	16	Advanti Inizio DST	35	40	10	3828,-		
			8x18	36	Image Colt	45	40	-10	2412,-		
			7,5x19	2	Nitro Sapphire FF	35	40	10	4572,-		
			8x19	11	Nitro Demon	38	40	4	3376,-		
			8x19	16	Advanti Inizio DST	35	40	10	4412,-		
			8,5x19	5	Nitro Volcano G.Gun	35	40	10	4388,-		M
			8,5x19	6	Nitro Volcano	35	40	10	4632,-		M
			8,5x19	9	Nitro Sabre G.Blk	45	40	-10	4292,-		M
			8,5x19	36	Image Colt	45	40	-10	3028,-		
			8,5x19	92	Image Colt L.Gun	45	40	-10	2876,-		
			8x20	2	Nitro Sapphire FF	35	40	10	5096,-		
			8,5x20	5	Nitro Volcano G.Gun	35	40	10	4824,-		M
			8,5x20	6	Nitro Volcano	35	40	10	5164,-		M
			8,5x20	7	Nitro Spark G.Blk/Grey	35	40	10	4660,-		M
			8,5x20	8	Nitro Spark G.Blk/Red	35	40	10	4660,-		M
			8,5x20	9	Nitro Sabre G.Blk	45	40	-10	4800,-		
			8,5x20	11	Nitro Demon	38	40	4	3808,-		M
			8,5x20	36	Image Colt	45	40	-10	3432,-		
			8,5x20	92	Image Colt L.Gun	45	40	-10	3276,-		

Bilmerke - Bilmodell	Årsmodell	Dimensjon	Felgdim.	Bilde	Felgmodell	ET Felg	ET Bil	Avvik ET	Veil. Pris eks. MVA	Merknader	B,C D, M
NISSAN				PCD: **5-114,3** Bolt - Mutter: **12x1,50B**		CB: **66,1**					
Juke (F16)	11.19-	16-20	6,5x16	36	Image Colt	35	35	0	1624,-		B
			6,5x16	46	Image Stella	32	35	6	1548,-	**OE-fit**	B,D
			6,5x16	47	Image Stella M.Blk	32	35	6	1548,-	**OE-fit**	B,D
			6,5x16	92	Image Colt L.Gun	35	35	0	1548,-		B
			7x17	46	Image Stella	35	35	0	1812,-	**OE-fit**	B,D
			7x17	47	Image Stella M.Blk	35	35	0	1812,-	**OE-fit**	B,D
			7,5x17	9	Nitro Sabre G.Blk	35	35	0	3052,-		B
			7,5x17	36	Image Colt	35	35	0	1956,-		B
			7,5x17	92	Image Colt L.Gun	35	35	0	1876,-		B
			7,5x18	2	Nitro Sapphire FF	35	35	0	3944,-		B
			7,5x19	2	Nitro Sapphire FF	35	35	0	4572,-		B
			8x19	16	Advanti Inizio DST	35	35	0	4412,-		B
			8x20	2	Nitro Sapphire FF	35	35	0	5096,-		B
NISSAN				PCD: **5-114,3** Bolt - Mutter: **12x1,25**		CB: **66,1**					
Almera (V10) Tino	09.00-02.06	15-19	6,5x16	34	CSP 16	40	40	0	1468,-	**OE-fit**	B,D
Altima	01.01-	16-20	6,5x16	36	Image Colt	35	40	10	1624,-		
Leaf (ZE0)	12.10-10.17	16-18	6,5x16	40	Image Spirit	40	40	0	1264,-	**OE-fit**	B,D
Maxima (A32)	04.95-04.00	15-19	6,5x16	46	Image Stella	40	40	0	1548,-	**OE-fit**	B,D
Maxima (A33)	05.00-12.03	16-20	6,5x16	47	Image Stella M.Blk	40	40	0	1548,-	**OE-fit**	B,D
Maxima (A34)	01.04-	17-20	6,5x16	48	Image Motion	40	40	0	1468,-		D
Primera (P12)	03.02-12.06	15-20	6,5x16	49	Image Motion G.Gun	40	40	0	1468,-		D
Pulsar (C13)	05.14-09.18	16-20	6,5x16	50	Image Legend	40	40	0	1544,-	**OE-fit**	B,D
			6,5x16	92	Image Colt L.Gun	35	40	10	1548,-		
			7x16	17	BM Drive M.Gun	40	40	0	1476,-		D
			7x17	17	BM Drive M.Gun	40	40	0	1736,-		D
			7x17	34	CSP 16	40	40	0	1836,-	**OE-fit**	B,D
			7x17	35	CSP 16 M.Gun	40	40	0	1836,-	**OE-fit**	B,D
			7x17	40	Image Spirit	40	40	0	1476,-	**OE-fit**	B,D
			7x17	46	Image Stella	40	40	0	1812,-		D
			7x17	47	Image Stella M.Blk	40	40	0	1812,-		D
			7x17	48	Image Motion	40	40	0	1736,-		D
			7x17	49	Image Motion G.Gun	40	40	0	1736,-		D
			7,5x17	9	Nitro Sabre G.Blk	35	40	10	3052,-		
			7,5x17	36	Image Colt	35	40	10	1956,-		
			7,5x17	50	Image Legend	40	40	0	1812,-	**OE-fit**	B,D
			7,5x17	92	Image Colt L.Gun	35	40	10	1876,-		
			7,5x18	2	Nitro Sapphire FF	35	40	10	3944,-		
			7,5x18	34	CSP 16	40	40	0	2444,-	**OE-fit**	B,D
			7,5x18	35	CSP 16 M.Gun	40	40	0	2444,-	**OE-fit**	B,D
			7,5x18	46	Image Stella	40	40	0	2276,-		D
			7,5x18	47	Image Stella M.Blk	40	40	0	2276,-		D
			8x18	7	Nitro Spark G.Blk/Grey	35	40	10	3476,-		
			8x18	8	Nitro Spark G.Blk/Red	35	40	10	3476,-		
			8x18	9	Nitro Sabre G.Blk	35	40	10	3496,-		
			8x18	16	Advanti Inizio DST	35	40	10	3828,-		
			8x18	36	Image Colt	35	40	10	2412,-		
			8x18	92	Image Colt L.Gun	35	40	10	2296,-		
			7,5x19	2	Nitro Sapphire FF	35	40	10	4572,-		
			8x19	11	Nitro Demon	38	40	4	3376,-		
			8x19	16	Advanti Inizio DST	35	40	10	4412,-		
			8,5x19	5	Nitro Volcano G.Gun	35	40	10	4388,-		M
			8,5x19	6	Nitro Volcano	35	40	10	4632,-		M
			8,5x19	9	Nitro Sabre G.Blk	35	40	10	4292,-		
			8,5x19	36	Image Colt	35	40	10	3028,-		
			8,5x19	92	Image Colt L.Gun	35	40	10	2876,-		
			8x20	2	Nitro Sapphire FF	35	40	10	5096,-		
			8,5x20	1	Nitro Throne FF	40	40	0	5060,-		
			8,5x20	5	Nitro Volcano G.Gun	35	40	10	4824,-		M
			8,5x20	6	Nitro Volcano	35	40	10	5164,-		M
			8,5x20	7	Nitro Spark G.Blk/Grey	35	40	10	4660,-		M
			8,5x20	8	Nitro Spark G.Blk/Red	35	40	10	4660,-		M
			8,5x20	9	Nitro Sabre G.Blk	35	40	10	4800,-		
			8,5x20	11	Nitro Demon	38	40	4	3808,-		
			8,5x20	36	Image Colt	35	40	10	3432,-		
			8,5x20	92	Image Colt L.Gun	35	40	10	3276,-		
NISSAN				PCD: **5-114,3** Bolt - Mutter: **12x1,25**		CB: **66,1**					
Leaf (ZE1)	11.17-	16-17	6,5x16	34	CSP 16	40	45	10	1468,-		D
			6,5x16	36	Image Colt	35	45	20	1624,-		
			6,5x16	40	Image Spirit	40	45	10	1264,-	**OE-fit**	B,D
			6,5x16	46	Image Stella	40	45	10	1548,-	**OE-fit**	B,D
			6,5x16	47	Image Stella M.Blk	40	45	10	1548,-	**OE-fit**	B,D
			6,5x16	48	Image Motion	40	45	10	1468,-		D
			6,5x16	49	Image Motion G.Gun	40	45	10	1468,-		D
			6,5x16	50	Image Legend	40	45	10	1544,-		D
			6,5x16	92	Image Colt L.Gun	35	45	20	1548,-		
			7x16	17	BM Drive M.Gun	40	45	10	1476,-		D
			7x17	17	BM Drive M.Gun	40	45	10	1736,-		D
			7x17	34	CSP 16	40	45	10	1836,-		D
			7x17	35	CSP 16 M.Gun	40	45	10	1836,-		D
			7x17	40	Image Spirit	40	45	10	1476,-	**OE-fit**	B,D
			7x17	46	Image Stella	40	45	10	1812,-		D
			7x17	47	Image Stella M.Blk	40	45	10	1812,-		D
			7x17	48	Image Motion	40	45	10	1736,-		D
			7x17	49	Image Motion G.Gun	40	45	10	1736,-		D
			7,5x17	36	Image Colt	35	45	20	1956,-		
			7,5x17	92	Image Colt L.Gun	35	45	20	1876,-		

Bilmerke - Bilmodell	Årsmodell	Dimensjon	Felgdim.	Bilde	Felgmodell	ET Felg	ET Bil	Avvik ET	Veil. Pris eks. MVA	Merknader	B,C D, M
NISSAN			PCD: **5-114,3** Bolt - Mutter: **12x1,25**			CB: **66,1**					
Qashqai (J10)	02.07-11.13	16-20	6,5x16	34	CSP 16	40	40	0	1468,-	**OE-fit**	B,D
Qashqai (J10) +2	10.08-11.13	16-20	6,5x16	36	Image Colt	35	40	10	1624,-		
1.6dCi, 2.0, 2.0dCi 17"			6,5x16	40	Image Spirit	40	40	0	1264,-		D
Quest	05.03-09.09	16-20	6,5x16	46	Image Stella	40	40	0	1548,-	**OE-fit**	B,D
X-Trail (T30)	09.01-06.07	15-19	6,5x16	47	Image Stella M.Blk	40	40	0	1548,-	**OE-fit**	B,D
X-Trail (T31)	07.07-04.14	16-20	6,5x16	48	Image Motion	40	40	0	1468,-		D
			6,5x16	49	Image Motion G.Gun	40	40	0	1468,-		D
			6,5x16	50	Image Legend	40	40	0	1544,-	**OE-fit**	B,D
			6,5x16	92	Image Colt L.Gun	35	40	10	1548,-		
			7x16	17	BM Drive M.Gun	40	40	0	1476,-		D
			7x17	17	BM Drive M.Gun	40	40	0	1736,-		D
			7x17	34	CSP 16	40	40	0	1836,-	**OE-fit**	B,D
			7x17	35	CSP 16 M.Gun	40	40	0	1836,-	**OE-fit**	B,D
			7x17	40	Image Spirit	40	40	0	1476,-	**OE-fit**	B,D
			7x17	46	Image Stella	40	40	0	1812,-	**OE-fit**	B,D
			7x17	47	Image Stella M.Blk	40	40	0	1812,-	**OE-fit**	B,D
			7x17	48	Image Motion	40	40	0	1736,-	**OE-fit**	B,D
			7x17	49	Image Motion G.Gun	40	40	0	1736,-	**OE-fit**	B,D
			7,5x17	9	Nitro Sabre G.Blk	35	40	10	3052,-		
			7,5x17	36	Image Colt	35	40	10	1956,-		
			7,5x17	50	Image Legend	40	40	0	1812,-	**OE-fit**	B,D
			7,5x17	92	Image Colt L.Gun	35	40	10	1876,-		
			7,5x18	2	Nitro Sapphire FF	35	40	10	3944,-		
			7,5x18	34	CSP 16	40	40	0	2444,-	**OE-fit**	B,D
			7,5x18	35	CSP 16 M.Gun	40	40	0	2444,-	**OE-fit**	B,D
			7,5x18	46	Image Stella	40	40	0	2276,-		D
			7,5x18	47	Image Stella M.Blk	40	40	0	2276,-		D
			8x18	7	Nitro Spark G.Blk/Grey	35	40	10	3476,-		
			8x18	8	Nitro Spark G.Blk/Red	35	40	10	3476,-		
			8x18	9	Nitro Sabre G.Blk	35	40	10	3496,-		
			8x18	16	Advanti Inizio DST	35	40	10	3828,-		
			8x18	36	Image Colt	35	40	10	2412,-		
			8x18	92	Image Colt L.Gun	35	40	10	2296,-		
			7,5x19	2	Nitro Sapphire FF	35	40	10	4572,-		
			8x19	11	Nitro Demon	38	40	4	3376,-		
			8x19	16	Advanti Inizio DST	35	40	10	4412,-		
			8,5x19	5	Nitro Volcano G.Gun	35	40	10	4388,-		B,M
			8,5x19	6	Nitro Volcano	35	40	10	4632,-		B,M
			8,5x19	9	Nitro Sabre G.Blk	35	40	10	4292,-		M
			8,5x19	36	Image Colt	35	40	10	3028,-		M
			8,5x19	92	Image Colt L.Gun	35	40	10	2876,-		M
			8x20	2	Nitro Sapphire FF	35	40	10	5096,-		
			8,5x20	1	Nitro Throne FF	40	40	0	5060,-		M
			8,5x20	5	Nitro Volcano G.Gun	35	40	10	4824,-		B,M
			8,5x20	6	Nitro Volcano	35	40	10	5164,-		B,M
			8,5x20	7	Nitro Spark G.Blk/Grey	35	40	10	4660,-		M
			8,5x20	8	Nitro Spark G.Blk/Red	35	40	10	4660,-		M
			8,5x20	9	Nitro Sabre G.Blk	35	40	10	4800,-		M
			8,5x20	11	Nitro Demon	38	40	4	3808,-		M
			8,5x20	36	Image Colt	35	40	10	3432,-		M
			8,5x20	92	Image Colt L.Gun	35	40	10	3276,-		M
NISSAN			PCD: **5-114,3** Bolt - Mutter: **12x1,50B**			CB: **66,1**					
Qashqai (J11)	12.13-	16-21	7x17	17	BM Drive M.Gun	40	40	0	1736,-		D
(Obs! 16" aluminium ej			7x17	34	CSP 16	40	40	0	1836,-	**OE-fit**	B,D
godkänt av Nissan)			7x17	35	CSP 16 M.Gun	40	40	0	1836,-	**OE-fit**	B,D
X-Trail (T32)	05.14-	17-21	7x17	40	Image Spirit	40	40	0	1476,-	**OE-fit**	B,D
			7x17	46	Image Stella	40	40	0	1812,-	**OE-fit**	B,D
			7x17	47	Image Stella M.Blk	40	40	0	1812,-	**OE-fit**	B,D
			7x17	48	Image Motion	40	40	0	1736,-	**OE-fit**	B,D
			7x17	49	Image Motion G.Gun	40	40	0	1736,-	**OE-fit**	B,D
			7,5x17	9	Nitro Sabre G.Blk	35	40	10	3052,-		B
			7,5x17	36	Image Colt	35	40	10	1956,-		B
			7,5x17	50	Image Legend	40	40	0	1812,-	**OE-fit**	B,D
			7,5x17	92	Image Colt L.Gun	35	40	10	1876,-		B
			7,5x18	2	Nitro Sapphire FF	35	40	10	3944,-		B
			7,5x18	34	CSP 16	40	40	0	2444,-	**OE-fit**	B,D
			7,5x18	35	CSP 16 M.Gun	40	40	0	2444,-	**OE-fit**	B,D
			7,5x18	46	Image Stella	40	40	0	2276,-	**OE-fit**	B,D
			7,5x18	47	Image Stella M.Blk	40	40	0	2276,-	**OE-fit**	B,D
			8x18	7	Nitro Spark G.Blk/Grey	35	40	10	3476,-		B
			8x18	8	Nitro Spark G.Blk/Red	35	40	10	3476,-		B
			8x18	9	Nitro Sabre G.Blk	35	40	10	3496,-		B
			8x18	16	Advanti Inizio DST	35	40	10	3828,-		B
			8x18	36	Image Colt	35	40	10	2412,-		B
			8x18	92	Image Colt L.Gun	35	40	10	2296,-		B
			7,5x19	2	Nitro Sapphire FF	35	40	10	4572,-		B
			8x19	11	Nitro Demon	38	40	4	3376,-		
			8x19	16	Advanti Inizio DST	35	40	10	4412,-		B
			8,5x19	5	Nitro Volcano G.Gun	35	40	10	4388,-		B,M
			8,5x19	6	Nitro Volcano	35	40	10	4632,-		B,M
			8,5x19	9	Nitro Sabre G.Blk	35	40	10	4292,-		B,M
			8,5x19	36	Image Colt	35	40	10	3028,-		B,M
			8,5x19	92	Image Colt L.Gun	35	40	10	2876,-		B,M
			8x20	2	Nitro Sapphire FF	35	40	10	5096,-		B
			8,5x20	1	Nitro Throne FF	40	40	0	5060,-		B,M
			8,5x20	5	Nitro Volcano G.Gun	35	40	10	4824,-		B,M

Forts. neste side »

Bilmerke - Bilmodell	Årsmodell	Dimensjon	Felgdim.	Bilde	Felgmodell	ET Felg	ET Bil	Avvik ET	Veil. Pris eks. MVA	Merknader	B,C D, M
NISSAN (forts.)				PCD: **5-114,3** Bolt - Mutter: **12x1,50B**		CB: **66,1**					
			8,5x20	6	Nitro Volcano	35	40	10	5164,-		B,M
			8,5x20	7	Nitro Spark G.Blk/Grey	35	40	10	4660,-		B,M
			8,5x20	8	Nitro Spark G.Blk/Red	35	40	10	4660,-		B,M
			8,5x20	9	Nitro Sabre G.Blk	35	40	10	4800,-		B,M
			8,5x20	11	Nitro Demon	38	40	4	3808,-		M
			8,5x20	36	Image Colt	35	40	10	3432,-		B,M
			8,5x20	92	Image Colt L.Gun	35	40	10	3276,-		B,M
			9x21	5	Nitro Volcano G.Gun	35	40	10	5540,-		B,M
			9x21	6	Nitro Volcano	35	40	10	5996,-		B,M
NISSAN				PCD: **5-114,3** Bolt - Mutter: **12x1,25**		CB: **66,1**					
Murano (Z50)	03.05-07.08	17-22	7x17	17	BM Drive M.Gun	40	40	0	1736,-		D
			7x17	34	CSP 16	40	40	0	1836,-	**OE-fit**	B,D
			7x17	35	CSP 16 M.Gun	40	40	0	1836,-	**OE-fit**	B,D
			7x17	46	Image Stella	40	40	0	1812,-		D
			7x17	47	Image Stella M.Blk	40	40	0	1812,-		D
			7,5x17	9	Nitro Sabre G.Blk	35	40	10	3052,-		
			7,5x17	36	Image Colt	35	40	10	1956,-		
			7,5x17	92	Image Colt L.Gun	35	40	10	1876,-		
			7,5x18	2	Nitro Sapphire FF	35	40	10	3944,-		
			7,5x18	34	CSP 16	40	40	0	2444,-	**OE-fit**	B,D
			7,5x18	35	CSP 16 M.Gun	40	40	0	2444,-	**OE-fit**	B,D
			7,5x18	46	Image Stella	40	40	0	2276,-		D
			7,5x18	47	Image Stella M.Blk	40	40	0	2276,-		D
			8x18	7	Nitro Spark G.Blk/Grey	35	40	10	3476,-		
			8x18	8	Nitro Spark G.Blk/Red	35	40	10	3476,-		
			8x18	9	Nitro Sabre G.Blk	35	40	10	3496,-		
			8x18	16	Advanti Inizio DST	35	40	10	3828,-		
			8x18	36	Image Colt	35	40	10	2412,-		
			8x18	92	Image Colt L.Gun	35	40	10	2296,-		
			7,5x19	2	Nitro Sapphire FF	35	40	10	4572,-		
			8x19	11	Nitro Demon	38	40	4	3376,-		
			8x19	16	Advanti Inizio DST	35	40	10	4412,-		
			8,5x19	9	Nitro Sabre G.Blk	35	40	10	4292,-		
			8,5x19	36	Image Colt	35	40	10	3028,-		
			8,5x19	92	Image Colt L.Gun	35	40	10	2876,-		
			8x20	2	Nitro Sapphire FF	35	40	10	5096,-		
			8,5x20	7	Nitro Spark G.Blk/Grey	35	40	10	4660,-		
			8,5x20	8	Nitro Spark G.Blk/Red	35	40	10	4660,-		
			8,5x20	9	Nitro Sabre G.Blk	35	40	10	4800,-		
			8,5x20	11	Nitro Demon	38	40	4	3808,-		
			8,5x20	36	Image Colt	35	40	10	3432,-		
			8,5x20	92	Image Colt L.Gun	35	40	10	3276,-		
NISSAN				PCD: **5-114,3** Bolt - Mutter: **12x1,25**		CB: **66,1**					
Murano (Z51)	08.08-	18-22	7,5x18	2	Nitro Sapphire FF	45	45	0	3944,-		
			7,5x18	34	CSP 16	40	45	10	2444,-	**OE-fit**	B,D
			7,5x18	35	CSP 16 M.Gun	40	45	10	2444,-	**OE-fit**	B,D
			7,5x18	46	Image Stella	40	45	10	2276,-		D
			7,5x18	47	Image Stella M.Blk	40	45	10	2276,-		D
			8x18	7	Nitro Spark G.Blk/Grey	45	45	0	3476,-		
			8x18	8	Nitro Spark G.Blk/Red	45	45	0	3476,-		
			8x18	9	Nitro Sabre G.Blk	45	45	0	3496,-		
			8x18	11	Nitro Demon	48	45	-6	2784,-		
			8x18	16	Advanti Inizio DST	45	45	0	3828,-		
			8x18	36	Image Colt	45	45	0	2412,-		
			7,5x19	2	Nitro Sapphire FF	45	45	0	4572,-		
			8x19	16	Advanti Inizio DST	45	45	0	4412,-		
			8,5x19	9	Nitro Sabre G.Blk	45	45	0	4292,-		
			8,5x19	36	Image Colt	45	45	0	3028,-		
			8,5x19	92	Image Colt L.Gun	45	45	0	2876,-		
			8x20	2	Nitro Sapphire FF	45	45	0	5096,-		
			8,5x20	7	Nitro Spark G.Blk/Grey	45	45	0	4660,-		
			8,5x20	8	Nitro Spark G.Blk/Red	45	45	0	4660,-		
			8,5x20	9	Nitro Sabre G.Blk	45	45	0	4800,-		
			8,5x20	36	Image Colt	45	45	0	3432,-		
			8,5x20	92	Image Colt L.Gun	45	45	0	3276,-		
			9x21	5	Nitro Volcano G.Gun	45	45	0	5540,-		M
			9x21	6	Nitro Volcano	45	45	0	5996,-		M
NISSAN				PCD: **4-114,3** Bolt - Mutter: **12x1,25**		CB: **66,1**					
Evalia	05.11-	14-17	5,5x14	37	Image Comet	45	45	0	1264,-		D
NV200	01.10-	14-17	5,5x14	38	Image Comet Slv	45	45	0	1264,-		D
			6x15	37	Image Comet	40	45	10	1316,-		D
			6x15	38	Image Comet Slv	40	45	10	1316,-		D
			6x16	37	Image Comet	40	45	10	1536,-		
NISSAN				PCD: **5-114,3** Bolt - Mutter: **12x1,25**		CB: **66,1**					
e-NV200	04.14-	15-16	6x15	34	CSP 16	45	45	0	1228,-	**OE-fit**	B,D
			6,5x16	34	CSP 16	40	45	10	1468,-	**OE-fit**	B,D
			6,5x16	36	Image Colt	45	45	0	1624,-		
			6,5x16	40	Image Spirit	40	45	10	1264,-	**OE-fit**	B,D
			6,5x16	46	Image Stella	40	45	10	1548,-	**OE-fit**	B,D
			6,5x16	47	Image Stella M.Blk	40	45	10	1548,-	**OE-fit**	B,D
			6,5x16	48	Image Motion	40	45	10	1468,-	**OE-fit**	B,D
			6,5x16	49	Image Motion G.Gun	40	45	10	1468,-	**OE-fit**	B,D
			6,5x16	50	Image Legend	40	45	10	1544,-	**OE-fit**	B,D
			6,5x16	92	Image Colt L.Gun	45	45	0	1548,-		
			7x16	17	BM Drive M.Gun	40	45	10	1476,-		D

Bilmerke - Bilmodell	Årsmodell	Dimensjon	Felgdim.	Bilde	Felgmodell	ET Felg	ET Bil	Avvik ET	Veil. Pris eks. MVA	Merknader	B,C D, M
NISSAN			PCD: **5-108** Bolt - Mutter: **12x1,50B**			CB: **60,1**					
NV250 (W)	10.19-	15-20	6x15	17	BM Drive M.Gun	40	44	8	1276,-		B
			6x15	48	Image Motion	40	44	8	1224,-		B
			6x15	49	Image Motion G.Gun	40	44	8	1224,-		B
			6,5x16	36	Image Colt	40	44	8	1624,-		B
			6,5x16	92	Image Colt L.Gun	40	44	8	1548,-		B
			7x16	17	BM Drive M.Gun	40	44	8	1476,-		B
			7x16	40	Image Spirit	40	44	8	1264,-		B
			7x16	46	Image Stella	40	44	8	1548,-		B
			7x16	47	Image Stella M.Blk	40	44	8	1548,-		B
			7x16	48	Image Motion	40	44	8	1468,-		B
			7x16	49	Image Motion G.Gun	40	44	8	1468,-		B
			7x16	50	Image Legend	40	44	8	1544,-		B
			7x17	40	Image Spirit	42	44	4	1476,-		B
			7x17	46	Image Stella	42	44	4	1812,-		B
			7x17	47	Image Stella M.Blk	42	44	4	1812,-		B
			7x17	48	Image Motion	40	44	8	1736,-		B
			7x17	49	Image Motion G.Gun	40	44	8	1736,-		B
			7,5x17	36	Image Colt	40	44	8	1956,-		B
			7,5x17	46	Image Stella	42	44	4	1812,-		B
			7,5x17	47	Image Stella M.Blk	42	44	4	1812,-		B
			7,5x17	50	Image Legend	40	44	8	1812,-		B
			7,5x17	92	Image Colt L.Gun	40	44	8	1876,-		B
			8x17	9	Nitro Sabre G.Blk	42	44	4	3108,-		B
			8x17	17	BM Drive M.Gun	42	44	4	1736,-		B
			8x17	22	ATS Evolution	42	44	4	2268,-		B
			8x17	23	ATS Evolution G.Grey	42	44	4	2340,-		B
			8x17	40	Image Spirit	42	44	4	1476,-		B
			8x17	48	Image Motion	42	44	4	1736,-		B
			8x17	49	Image Motion G.Gun	42	44	4	1736,-		B
			8x18	2	Nitro Sapphire FF	42	44	4	4036,-		B
			8x18	7	Nitro Spark G.Blk/Grey	42	44	4	3476,-		B
			8x18	8	Nitro Spark G.Blk/Red	45	44	-2	3476,-		B
			8x18	9	Nitro Sabre G.Blk	42	44	4	3496,-		B
			8x18	10	Nitro Demon H.Slv	40	44	8	2972,-		B
			8x18	11	Nitro Demon	40	44	8	2784,-		B
			8x18	16	Advanti Inizio DST	42	44	4	3828,-		B
			8x18	17	BM Drive M.Gun	42	44	4	2296,-		B
			8x18	22	ATS Evolution	42	44	4	3016,-		B
			8x18	23	ATS Evolution G.Grey	42	44	4	3116,-		B
			8x18	36	Image Colt	42	44	4	2412,-		B
			8x18	40	Image Spirit	42	44	4	1912,-		B
			8x18	41	Image Thor	42	44	4	2412,-		B
			8x18	46	Image Stella	42	44	4	2276,-		B
			8x18	47	Image Stella M.Blk	42	44	4	2276,-		B
			8x18	48	Image Motion	42	44	4	2204,-		B
			8x18	49	Image Motion G.Gun	42	44	4	2204,-		B
			8x18	50	Image Legend	42	44	4	2276,-		B
			8x18	53	Nitro Hammer	42	44	4	3256,-		B
			8x18	92	Image Colt L.Gun	42	44	4	2296,-		B
			8x19	2	Nitro Sapphire FF	42	44	4	4684,-		B
			8x19	3	Nitro Turismo FF	42	44	4	4492,-		B
			8x19	4	Nitro Turismo FF G.Gun/Pol	42	44	4	4644,-		B
			8x19	11	Nitro Demon	40	44	8	3376,-		B
			8x19	16	Advanti Inizio DST	42	44	4	4412,-		B
			8x19	22	ATS Evolution	42	44	4	3892,-		B
			8x19	23	ATS Evolution G.Grey	42	44	4	4008,-		B
			8x19	48	Image Motion	42	44	4	2532,-		B
			8x19	49	Image Motion G.Gun	42	44	4	2532,-		B
			8x20	3	Nitro Turismo FF	45	44	-2	4812,-		B
			8x20	4	Nitro Turismo FF G.Gun/Pol	45	44	-2	4964,-		B
NISSAN			PCD: **5-114,3** Bolt - Mutter: **14x1,50B**			CB: **66,1**					
NV300	08.16-	16-20	6,5x16	54	Image Vector	50	50	0	1956,-	**OE-fit**	B,D
Primastar	12.14-	16-20	6,5x16	55	Image Vector Slv	50	50	0	1956,-	**OE-fit**	B,D
			7x17	54	Image Vector	50	50	0	2576,-	**OE-fit**	B,D
			7x17	55	Image Vector Slv	50	50	0	2576,-	**OE-fit**	B,D
			8x18	53	Nitro Hammer	45	50	10	3256,-	**OE-fit**	B,D
			8,5x20	1	Nitro Throne FF	40	50	20	5060,-	Maks bel. 900 kg	B,M
			8,5x20	53	Nitro Hammer	45	50	10	4268,-	**OE-fit**	B,D
NISSAN			PCD: **5-130** Bolt - Mutter: **14x1,50B**			CB: **89,1**					
Interstar	09.02-12.11	16-18	6,5x16	58	Image Strong	62	66	8	2500,-		D
NV400 (M1) fwd	11.11-	16-18	6,5x16	59	Image Strong M.Gun	62	66	8	2500,-		D
2.8t, 3.3t, 3.5t			6,5x16	61	Image Solid	66	66	0	2552,-	Maks bel. 1400 kg	D
NV400 (M1) rwd	11.11-	16-18									
3.5t											
NISSAN			PCD: **6-139,7** Bolt - Mutter: **12x1,25**			CB: **100,0**					
King-Cab 4wd	-98	15-18	8x16	78	Advanti Peak	5	30	50	2692,-	Ikke Patrol	
Patrol (Y60)	87-97	15-18									
Terrano	-	15-18									
Terrano II	94-	15-17									
NISSAN			PCD: **6-139,7** Bolt - Mutter: **12x1,25**			CB: **100,0**					
King-Cab (D22) 4wd	01.98-09.05	15-24	8x16	78	Advanti Peak	5	40	70	2692,-		
Navara			9x17	74	Ballistic Morax	12	40	56	4020,-		M
NP300	10.05-12.13	16-24	9x18	74	Ballistic Morax	12	40	56	4276,-		M
(gamla King-Cab D22)			9x20	74	Ballistic Morax	12	40	56	4740,-		M

Bilmerke - Bilmodell	Årsmodell	Dimensjon	Felgdim.	Bilde	Felgmodell	ET Felg	ET Bil	Avvik ET	Veil. Pris eks. MVA	Merknader	B,C D, M
NISSAN				PCD: **6-114,3** Bolt - Mutter: **12x1,25** CB: **66,1**							
King-Cab (D40) Navara 4wd	10.05-11.15	16-22	7x16	68	BM Macho	25	30	10	2396,-		D
3.0dCi 17"			7x16	69	BM Macho M.Blk	25	30	10	2396,-		D
Pathfinder (R51)	02.10-	17-22	7,5x17	68	BM Macho	25	30	10	2756,-		D
Pathfinder XE	01.05-01.10	16-22	7,5x17	69	BM Macho M.Blk	25	30	10	2756,-		D
SE, LE 17"			8x18	68	BM Macho	25	30	10	3300,-		D
NISSAN				PCD: **6-114,3** Bolt - Mutter: **12x1,25** CB: **66,1**							
Navara (D23) NP300	12.15-04.19	16-22	7x16	68	BM Macho	40	45	10	2396,-		D
Navara (D23) NP300	05.19-	17-22	7x16	69	BM Macho M.Blk	40	45	10	2396,-		D
(Facelift)			7,5x17	67	Image Rock	50	45	-10	2796,-	**OE-fit**	B,D
			7,5x17	68	BM Macho	40	45	10	2756,-		D
			7,5x17	69	BM Macho M.Blk	40	45	10	2756,-		D
			7,5x18	67	Image Rock	50	45	-10	3324,-	**OE-fit**	B,D
			8x18	68	BM Macho	45	45	0	3300,-		D
			8x18	69	BM Macho M.Blk	45	45	0	3300,-		D
			9x20	68	BM Macho	40	45	10	4288,-		D
			9x20	69	BM Macho M.Blk	40	45	10	4288,-		D
			9x20	72	Ballistic Dakota	43	45	4	4624,-		D
			9x22	72	Ballistic Dakota	43	45	4	5128,-		D
NISSAN				PCD: **6-139,7** Bolt - Mutter: **12x1,25** CB: **78,1**							
Armada	03-	17-26	9x17	74	Ballistic Morax	12	25	26	4020,-		
Titan I	09.03-10.15	17-26	9x18	74	Ballistic Morax	12	25	26	4276,-		
			9x20	74	Ballistic Morax	12	25	26	4740,-		
OLDSMOBILE				PCD: **5-100** Bolt - Mutter: **12x1,50** CB: **57,1**							
Achieva	92-99	15-17	6x15	48	Image Motion	40	42	4	1224,-		
			6,5x16	36	Image Colt	40	42	4	1624,-		
			6,5x16	92	Image Colt L.Gun	40	42	4	1548,-		
OLDSMOBILE				PCD: **5-115** Bolt - Mutter: **12x1,50** CB: **70,3**							
88 Royale	92-99	15-18	6,5x16	36	Image Colt	35	43	16	1624,-		
Aurora	95-99	15-18	6,5x16	92	Image Colt L.Gun	35	43	16	1548,-		
Cutlass Ciera S	83-96	15-18	7,5x17	46	Image Stella	41	43	4	1812,-		D
			7,5x17	47	Image Stella M.Blk	41	43	4	1812,-		D
			7,5x17	92	Image Colt L.Gun	35	43	16	1876,-		
OPEL				PCD: **4-100** Bolt - Mutter: **12x1,50B** CB: **54,1**							
Agila	04.08-04.15	14-18	5x14	37	Image Comet	35	45	20	1264,-		D
			5,5x14	45	Image Ride	38	45	14	1392,-		
			5x15	38	Image Comet Slv	35	45	20	1316,-		D
			6x15	19	ATS Streetrallye Slv	38	45	14	1960,-		
			6x15	42	Image Brio	40	45	10	1304,-		
			6x15	45	Image Ride	38	45	14	1552,-		
			6,5x16	34	CSP 16	40	45	10	1468,-		
OPEL				PCD: **4-100** Bolt - Mutter: **12x1,50** CB: **56,6**							
Karl (D-A)	06.15-	14-17	5,5x14	45	Image Ride	38	48	20	1392,-		
			6x15	19	ATS Streetrallye Slv	38	48	20	1960,-		
			6x15	34	CSP 16	39	48	18	1228,-	**OE-fit**	B,D
			6x15	37	Image Comet	39	48	18	1316,-		D
			6x15	42	Image Brio	40	48	16	1304,-		B
			6x15	45	Image Ride	38	48	20	1552,-		
			6x16	37	Image Comet	40	48	16	1536,-		
			6x16	38	Image Comet Slv	40	48	16	1536,-		
			6,5x16	19	ATS Streetrallye Slv	40	48	16	2240,-		
			6,5x16	34	CSP 16	40	48	16	1468,-		
			6,5x16	42	Image Brio	38	48	20	1524,-		B
			7x17	18	ATS Streetrallye Blk	45	48	6	3344,-		
			7x17	42	Image Brio	40	48	16	1832,-		B
OPEL				PCD: **4-100** Bolt - Mutter: **12x1,50B** CB: **56,6**							
Adam (SD)	10.12-06.19	14-19	5,5x14	45	Image Ride	38	39	2	1392,-		
1.0T (85kW) 15"			6x15	19	ATS Streetrallye Slv	38	39	2	1960,-		
1,4T (110kW) 15"			6x15	34	CSP 16	39	39	0	1228,-	**OE-fit**	B,D
Adam (SD) Rocks	07.14-06.19	15-19	6x15	37	Image Comet	39	39	0	1316,-	**OE-fit**	B,D
Astra (G) 4-bult	03.98-02.04	14-18	6x15	42	Image Brio	40	39	-2	1304,-		B
Astra (H) 4-bult	03.04-10.09	15-19	6x15	45	Image Ride	38	39	2	1552,-		
Corsa (D) 4-bult	09.06-10.14	14-18	6x16	37	Image Comet	40	39	-2	1536,-		B
1.3CDTi (66kW), 1.4i 15"			6x16	38	Image Comet Slv	40	39	-2	1536,-		B
Corsa (E) 4-bult	11.14-09.19	14-19	6,5x16	19	ATS Streetrallye Slv	40	39	-2	2240,-		
1.0T, 1.4T, 1.3CDTi 15"			6,5x16	34	CSP 16	40	39	-2	1468,-		B
Meriva (A) 4-bult	03.03-04.10	14-18	6,5x16	42	Image Brio	38	39	2	1524,-		B
1.6i (74kW), 1.7DTI 15"			7x17	18	ATS Streetrallye Blk	45	39	-12	3344,-		
1.8i 15"			7x17	42	Image Brio	40	39	-2	1832,-		B
Tigra TwinTop	09.04-10.09	15-18	7,5x18	18	ATS Streetrallye Blk	38	39	2	4180,-		M
Vectra (B) 4-bult	10.95-12.98	14-19									
OPEL				PCD: **4-108** Bolt - Mutter: **12x1,25B** CB: **65,1**							
Corsa (F)	10.19-	15-19	6x15	37	Image Comet	32	38	12	1316,-	**OE-fit**	B,D
1.2T (74kW), 1.5D (75kW) 16"			6x15	38	Image Comet Slv	32	38	12	1316,-	**OE-fit**	B,D
1.2T (96kW) 16"			6x15	42	Image Brio	32	38	12	1304,-		D
e-Corsa (F)	10.19-	16-19	6x16	37	Image Comet	35	38	6	1536,-	**OE-fit**	B,D
			6x16	38	Image Comet Slv	35	38	6	1536,-	**OE-fit**	B,D
			6,5x16	42	Image Brio	38	38	0	1524,-		D
			7x17	42	Image Brio	38	38	0	1832,-		D
OPEL				PCD: **5-110** Bolt - Mutter: **12x1,50B** CB: **65,1**							
Adam (SD) S	06.15-06.19	16-18	6,5x16	36	Image Colt	40	44	8	1624,-	**OE-fit**	B,D
			6,5x16	48	Image Motion	40	44	8	1468,-	**OE-fit**	B,D
			6,5x16	92	Image Colt L.Gun	40	44	8	1548,-	**OE-fit**	B,D
			7x16	17	BM Drive M.Gun	40	44	8	1476,-	Eksenterbolter	D
			7x17	48	Image Motion	40	44	8	1736,-	**OE-fit**	B,D

Forts. neste side »

Bilmerke - Bilmodell	Årsmodell	Dimensjon	Felgdim.	Bilde	Felgmodell	ET Felg	ET Bil	Avvik ET	Veil. Pris eks. MVA	Merknader	B,C D, M
OPEL (forts.)				PCD: **5-110** Bolt - Mutter: **12x1,50B**	CB: **65,1**						
			7,5x17	36	Image Colt	40	44	8	1956,-	**OE-fit**	B,D
			7,5x17	92	Image Colt L.Gun	40	44	8	1876,-	**OE-fit**	B,D
			8x18	36	Image Colt	40	44	8	2412,-	**OE-fit**	B,D
			8x18	92	Image Colt L.Gun	40	44	8	2296,-	**OE-fit**	B,D
OPEL				PCD: **4-108** Bolt - Mutter: **12x1,25B**	CB: **65,1**						
Crossland X	08.17-	15-19	6x15	19	ATS Streetrallye Slv	23	20	-6	1960,-		D
1.2T (96kW) 16"			6x15	37	Image Comet	23	20	-6	1316,-	**OE-fit**	B,D
1.6CDTi (88kW) 16"			6x15	38	Image Comet Slv	23	20	-6	1316,-	**OE-fit**	B,D
			6,5x15	42	Image Brio	20	20	0	1304,-		D
			6x16	19	ATS Streetrallye Slv	23	20	-6	2240,-		D
			6x16	37	Image Comet	23	20	-6	1536,-	**OE-fit**	B,D
			6,5x16	19	ATS Streetrallye Slv	20	20	0	2240,-		D
			6,5x16	42	Image Brio	20	20	0	1524,-		D
			7x17	42	Image Brio	18	20	4	1832,-		D
			7,5x18	18	ATS Streetrallye Blk	22	20	-4	4180,-		D
OPEL				PCD: **5-105** Bolt - Mutter: **12x1,50**	CB: **56,6**						
Astra (J) 5-105	11.09-08.15	16-20	6x15	48	Image Motion	37	39	4	1224,-	**OE-fit**	B,D
1.3CDTI, 1.4			6,5x16	34	CSP 16	41	39	-4	1468,-	**OE-fit**	B,D
1.4 Turbo, 1.6			6,5x16	46	Image Stella	41	39	-4	1548,-	**OE-fit**	B,D
Astra (K)	09.15-	15-20	6,5x16	47	Image Stella M.Blk	41	39	-4	1548,-	**OE-fit**	B,D
1.4i (92/110kW) 16"			6,5x16	48	Image Motion	38	39	2	1468,-	**OE-fit**	B,D
1.6CDTi (81/110kW) 16"			6,5x16	50	Image Legend	41	39	-4	1544,-	**OE-fit**	B,D
Astra (K) sports tourer	04.16-	15-20	7x17	46	Image Stella	41	39	-4	1812,-	**OE-fit**	B,D
1.4i (92/110kW) 16"			7x17	47	Image Stella M.Blk	41	39	-4	1812,-	**OE-fit**	B,D
Mokka (J-A)	11.12-09.16	16-20	7x17	48	Image Motion	38	39	2	1736,-	**OE-fit**	B,D
Mokka (J-A) X	10.16-	16-20	7,5x17	50	Image Legend	38	39	2	1812,-	**OE-fit**	B,D
			8x18	50	Image Legend	40	39	-2	2276,-	**OE-fit**	B,D
OPEL				PCD: **5-105** Bolt - Mutter: **12x1,50**	CB: **56,6**						
Ampera-E (1G0F)	04.17-	17-17	7x17	46	Image Stella	41	44	6	1812,-	**OE-fit**	B,D
			7x17	47	Image Stella M.Blk	41	44	6	1812,-	**OE-fit**	B,D
			7x17	48	Image Motion	38	44	12	1736,-	**OE-fit**	B,D
			7,5x17	50	Image Legend	38	44	12	1812,-	**OE-fit**	B,D
OPEL				PCD: **5-115** Bolt - Mutter: **12x1,50**	CB: **70,3**						
Ampera (D1JOI)	12.11-07.17	16-17	7,5x17	46	Image Stella	41	41	0	1812,-	**OE-fit**	B,D
Astra (J) 5-115	11.09-08.15	16-20	7,5x17	47	Image Stella M.Blk	41	41	0	1812,-	**OE-fit**	B,D
1.6CDTI, 1.6 Turbo			7,5x17	50	Image Legend	40	41	2	1812,-		D
1.7CDTI, 2.0CDTI			8x18	46	Image Stella	41	41	0	2276,-		D
Astra (J) GTC	10.11-08.15	17-20	8x18	47	Image Stella M.Blk	41	41	0	2276,-		D
Cascada (PJSW)	03.13-12.19	17-20	8x18	48	Image Motion	38	41	6	2204,-		D
Zafira (P-J/SW)	01.12-05.19	16-20	8x18	49	Image Motion G.Gun	38	41	6	2204,-		D
1.6 Turbo 17"			8x18	50	Image Legend	42	41	-2	2276,-	**OE-fit**	B,D
2.0CDTi (121/143kW) 17"											
OPEL				PCD: **5-115** Bolt - Mutter: **12x1,50B**	CB: **70,3**						
Astra (J) OPC	07.12-08.15	18-20	8x18	46	Image Stella	41	41	0	2276,-		D
			8x18	47	Image Stella M.Blk	41	41	0	2276,-		D
			8x18	48	Image Motion	38	41	6	2204,-		D
			8x18	49	Image Motion G.Gun	38	41	6	2204,-		D
			8x18	50	Image Legend	42	41	-2	2276,-	**OE-fit**	B,D
OPEL				PCD: **5-110** Bolt - Mutter: **12x1,50B**	CB: **65,1**						
Astra (G) 5-bult	01.99-02.04	15-19	6x15	48	Image Motion	38	49	22	1224,-		D
Astra (G) cab	03.01-02.04	15-18	6,5x16	36	Image Colt	40	49	18	1624,-	**OE-fit**	B,D
Astra (G) coupe	06.00-02.04	15-19	6,5x16	48	Image Motion	40	49	18	1468,-	**OE-fit**	B,D
2.0 Turbo 16"			6,5x16	92	Image Colt L.Gun	40	49	18	1548,-	**OE-fit**	B,D
Calibra 5-bult	09.92-05.97	15-18	7x16	17	BM Drive M.Gun	40	49	18	1476,-	Eksenterbolter	D
Corsa (C) 5-bult	10.00-08.06	15-19	7x17	48	Image Motion	40	49	18	1736,-	**OE-fit**	B,D
1,7CDTi			7,5x17	36	Image Colt	40	49	18	1956,-	**OE-fit**	B,D
Corsa (C) Combo 5-bult	11.01-09.11	15-18	7,5x17	92	Image Colt L.Gun	40	49	18	1876,-	**OE-fit**	B,D
1.7CDTi			8x17	48	Image Motion	34	49	30	1736,-		D,M
Meriva (A) 5-bult	10.03-04.10	15-18	8x18	11	Nitro Demon	40	49	18	2784,-	Eksenterbolter	D
1.7CDTi			8x18	36	Image Colt	40	49	18	2412,-	**OE-fit**	B,D
Meriva (A) OPC	03.06-04.10	16-19	8x18	48	Image Motion	34	49	30	2204,-		D,M
Vectra (A) 5-bult	03.93-09.95	15-18	8x18	92	Image Colt L.Gun	40	49	18	2296,-	**OE-fit**	B,D
Vectra (B) 5-bult	10.95-03.02	15-19	8x19	11	Nitro Demon	40	49	18	3376,-	Eksenterbolter	D
Zafira (A)	03.99-06.05	15-19									
OPC, 2.2DTI 16"											
OPEL				PCD: **5-110** Bolt - Mutter: **12x1,50B**	CB: **65,1**						
Astra (H) 5-bult	03.04-10.09	15-20	6x15	48	Image Motion	38	35	-6	1224,-	**OE-fit**	B,D
1.6i Turbo, 1.9CDTi 16"			6,5x16	36	Image Colt	40	35	-10	1624,-	**OE-fit**	B,D
2.0i Turbo 16"			6,5x16	48	Image Motion	40	35	-10	1468,-	**OE-fit**	B,D
Astra (H) OPC	06.05-10.09	17-20	6,5x16	92	Image Colt L.Gun	40	35	-10	1548,-	**OE-fit**	B,D
Astra (H) TwinTop	04.06-10.09	16-20	7x16	17	BM Drive M.Gun	40	35	-10	1476,-	Eksenterbolter	D
Corsa (D) 5-bult	09.06-10.14	15-19	7x17	48	Image Motion	40	35	-10	1736,-	**OE-fit**	B,D
1.7CDTi, GSi			7,5x17	36	Image Colt	40	35	-10	1956,-	**OE-fit**	B,D
Corsa (D) OPC	06.07-10.14	16-19	7,5x17	92	Image Colt L.Gun	40	35	-10	1876,-	**OE-fit**	B,D
Nürburgring edition 17"			8x17	48	Image Motion	34	35	2	1736,-		D,M
Corsa (E) 5-bult	01.15-09.19	16-19	8x18	11	Nitro Demon	40	35	-10	2784,-	Eksenterbolter	D
1.4Turbo (110kW)			8x18	36	Image Colt	40	35	-10	2412,-	**OE-fit**	B,D
Meriva (B)	05.10-	15-20	8x18	48	Image Motion	34	35	2	2204,-		D,M
1.4 Turbo (103kW) 16"			8x18	92	Image Colt L.Gun	40	35	-10	2296,-	**OE-fit**	B,D
1.7CDTI 16"			8x19	11	Nitro Demon	40	35	-10	3376,-	Eksenterbolter	D
Signum	05.03-06.08	15-20									
2.0 Turbo, 3.0CDTi 16"											
3.2 V6 16"											
Vectra (C)	04.02-10.08	15-20									

Forts. neste side »

Bilmerke - Bilmodell	Årsmodell	Dimensjon	Felgdim.	Bilde	Felgmodell	ET Felg	ET Bil	Avvik ET	Veil. Pris eks. MVA	Merknader	B,C D, M
OPEL (forts.)				PCD: **5-110** Bolt - Mutter: **12x1,50B** CB: **65,1**							
2.0 Turbo (129kW) 16"											
3.0CDTi, 3.2 16"											
Vectra (C) OPC 17"	06.05-10.08	17-20									
Zafira (B)	07.05-12.11	15-20									
1.9CDTi, 2.0 Turbo 16"											
2.2i 16"											
Zafira (B) OPC 16"	03.06-12.11	16-20									
OPEL				PCD: **5-120** Bolt - Mutter: **14x1,50** CB: **67,1**							
Insignia (0G-A)	11.08-09.13	16-20	7,5x17	26	CSP 18 G.Blk/pol	37	41	8	2272,-		
1.6T, 2.0T, 2.8T 17"			7,5x17	27	CSP 18	37	41	8	2200,-		
2.0 CDTI (118/140kW) 17"			7,5x17	28	CSP 18 G.Blk	37	41	8	2200,-		
Insignia (0G-A) country tourer	10.13-08.17	17-20	8x18	11	Nitro Demon	40	41	2	2784,-		
Insignia (0G-A) facelift	10.13-03.17	16-20	8x19	4	Nitro Turismo FF G.Gun/Pol	40	41	2	4644,-		
1.6T, 2.0T, 2.0CDTi 17"			8x19	11	Nitro Demon	40	41	2	3376,-		
			9x19	12	Nitro Edge M.Blk	40	41	2	3884,-		M
			8,5x20	11	Nitro Demon	40	41	2	3808,-		
			9x20	12	Nitro Edge M.Blk	40	41	2	4220,-		M
OPEL				PCD: **5-115** Bolt - Mutter: **12x1,50** CB: **70,3**							
Insignia (Z-B) country tourer	09.17-	18-21	7,5x17	46	Image Stella	41	45	8	1812,-	**OE-fit**	B,D
Insignia (Z-B) grand sport	04.17-	16-21	7,5x17	47	Image Stella M.Blk	41	45	8	1812,-	**OE-fit**	B,D
2.0CDTi 17"			7,5x17	50	Image Legend	40	45	10	1812,-	**OE-fit**	B,D
2.0 Turbo 17"			8x18	46	Image Stella	41	45	8	2276,-		D
Insignia (Z-B) GSi	12.19-	18-21	8x18	47	Image Stella M.Blk	41	45	8	2276,-		D
Insignia (Z-B) sports tourer	04.17-	16-21	8x18	48	Image Motion	38	45	14	2204,-	**OE-fit**	B,D
2.0CDTi 17"			8x18	49	Image Motion G.Gun	38	45	14	2204,-	**OE-fit**	B,D
2.0 Turbo 17"			8x18	50	Image Legend	42	45	6	2276,-	**OE-fit**	B,D
OPEL				PCD: **5-110** Bolt - Mutter: **12x1,50B** CB: **65,1**							
Omega (A)	09.86-03.94	14-18	8x17	48	Image Motion	34	33	-2	1736,-		D
Omega (B)	04.94-05.03	15-19	8x18	48	Image Motion	34	33	-2	2204,-		D
Senator	88-94	15-19									
OPEL				PCD: **5-108** Bolt - Mutter: **12x1,25B** CB: **65,1**							
Grandland X (Z)	10.17-	16-21	6,5x16	36	Image Colt	40	44	8	1624,-		D
1.6T (133kW), 2.0CDTi 17"			6,5x16	92	Image Colt L.Gun	40	44	8	1548,-		D
			7x16	17	BM Drive M.Gun	40	44	8	1476,-		D
			7x16	40	Image Spirit	40	44	8	1264,-		D
			7x16	46	Image Stella	40	44	8	1548,-		D
			7x16	47	Image Stella M.Blk	40	44	8	1548,-		D
			7x16	48	Image Motion	40	44	8	1468,-		D
			7x16	49	Image Motion G.Gun	40	44	8	1468,-		D
			7x16	50	Image Legend	40	44	8	1544,-		D
			7x17	40	Image Spirit	42	44	4	1476,-		D
			7x17	46	Image Stella	42	44	4	1812,-		D
			7x17	47	Image Stella M.Blk	42	44	4	1812,-		D
			7,5x17	36	Image Colt	40	44	8	1956,-		D
			7,5x17	50	Image Legend	40	44	8	1812,-		D
			7,5x17	92	Image Colt L.Gun	40	44	8	1876,-		D
			8x17	17	BM Drive M.Gun	45	44	-2	1736,-		D
			8x17	48	Image Motion	45	44	-2	1736,-		D
			8x18	7	Nitro Spark G.Blk/Grey	45	44	-2	3476,-		D
			8x18	8	Nitro Spark G.Blk/Red	45	44	-2	3476,-		D
			8x18	11	Nitro Demon	40	44	8	2784,-		D
			8x18	17	BM Drive M.Gun	45	44	-2	2296,-		D
			8x18	36	Image Colt	42	44	4	2412,-		D
			8x18	48	Image Motion	45	44	-2	2204,-		D
			8x18	53	Nitro Hammer	42	44	4	3256,-		D
			8x18	92	Image Colt L.Gun	42	44	4	2296,-		D
			8x19	11	Nitro Demon	40	44	8	3376,-		D
			8x19	48	Image Motion	45	44	-2	2532,-		D
			8,5x19	36	Image Colt	42	44	4	3028,-		D,M
			8,5x19	92	Image Colt L.Gun	42	44	4	2876,-		D,M
			8,5x20	7	Nitro Spark G.Blk/Grey	45	44	-2	4660,-		D,M
			8,5x20	8	Nitro Spark G.Blk/Red	45	44	-2	4660,-		D,M
			8,5x20	11	Nitro Demon	45	44	-2	3808,-		D,M
			8,5x20	36	Image Colt	42	44	4	3432,-		D,M
			8,5x20	53	Nitro Hammer	42	44	4	4268,-		D,M
			8,5x20	92	Image Colt L.Gun	42	44	4	3276,-		D,M
OPEL				PCD: **5-115** Bolt - Mutter: **12x1,50** CB: **70,3**							
Antara (L-A)	12.06-05.15	16-20	7,5x17	46	Image Stella	41	46	10	1812,-		D
			7,5x17	47	Image Stella M.Blk	41	46	10	1812,-		D
			7,5x17	50	Image Legend	40	46	12	1812,-	**OE-fit**	B,D
			8x18	46	Image Stella	41	46	10	2276,-		D
			8x18	47	Image Stella M.Blk	41	46	10	2276,-		D
			8x18	50	Image Legend	42	46	8	2276,-	**OE-fit**	B,D
OPEL				PCD: **5-98** Bolt - Mutter: **12x1,25B** CB: **58,1**							
Combo (D)	11.11-09.18	15-20	6x15	48	Image Motion	38	39	2	1224,-	**OE-fit**	B,D
(Biler med lång hjulbas,			6,5x16	48	Image Motion	38	39	2	1468,-	**OE-fit**, Maks bel. 690 kg	B,D
3105mm krever 16")			6,5x16	54	Image Vector	36	39	6	1956,-	**OE-fit**	B,D
			7x17	54	Image Vector	36	39	6	2576,-	**OE-fit**	B,D

Bilmerke - Bilmodell	Årsmodell	Dimensjon	Felgdim.	Bilde	Felgmodell	ET Felg	ET Bil	Avvik ET	Veil. Pris eks. MVA	Merknader	B,C D, M
OPEL				PCD: **5-108** Bolt - Mutter: **12x1,25B**		CB: **65,1**					
Combo (E) cargo	10.18-	16-20	6,5x16	36	Image Colt	40	47	14	1624,-	Maks bel. 700 kg	D
Combo (E) life	10.18-	16-20	6,5x16	48	Image Motion	47	47	0	1468,-	**OE-fit**, Maks bel. 700 kg	B,D
			6,5x16	54	Image Vector	46	47	2	1956,-	**OE-fit**, Maks bel. 900 kg	B,D
			6,5x16	55	Image Vector Slv	46	47	2	1956,-	**OE-fit**	B,D
			6,5x16	92	Image Colt L.Gun	40	47	14	1548,-	Maks bel. 700 kg	D
			7x16	17	BM Drive M.Gun	40	47	14	1476,-		D
			7x16	46	Image Stella	40	47	14	1548,-	Maks bel. 690 kg	D
			7x16	47	Image Stella M.Blk	40	47	14	1548,-	Maks bel. 690 kg	D
			7x16	49	Image Motion G.Gun	40	47	14	1468,-		D
			7x16	50	Image Legend	40	47	14	1544,-		D
			7x17	46	Image Stella	42	47	10	1812,-	Maks bel. 690 kg	D
			7x17	47	Image Stella M.Blk	42	47	10	1812,-	Maks bel. 690 kg	D
			7x17	54	Image Vector	46	47	2	2576,-	**OE-fit**	B,D
			7x17	55	Image Vector Slv	46	47	2	2576,-	**OE-fit**	B,D
			7,5x17	36	Image Colt	40	47	14	1956,-	Maks bel. 750 kg	D
			7,5x17	50	Image Legend	40	47	14	1812,-		D
			7,5x17	92	Image Colt L.Gun	40	47	14	1876,-	Maks bel. 750 kg	D
			8x17	17	BM Drive M.Gun	45	47	4	1736,-		D
			8x17	48	Image Motion	45	47	4	1736,-		D
			8x18	7	Nitro Spark G.Blk/Grey	45	47	4	3476,-	Maks bel. 750 kg	D
			8x18	8	Nitro Spark G.Blk/Red	45	47	4	3476,-	Maks bel. 750 kg	D
			8x18	11	Nitro Demon	40	47	14	2784,-		D
			8x18	17	BM Drive M.Gun	45	47	4	2296,-		D
			8x18	36	Image Colt	42	47	10	2412,-	Maks bel. 750 kg	D
			8x18	48	Image Motion	45	47	4	2204,-		D
			8x18	53	Nitro Hammer	42	47	10	3256,-		D
			8x18	92	Image Colt L.Gun	42	47	10	2296,-	Maks bel. 750 kg	D
			8x19	11	Nitro Demon	40	47	14	3376,-		D
			8x19	48	Image Motion	45	47	4	2532,-		D
			8,5x19	36	Image Colt	42	47	10	3028,-	Maks bel. 750 kg	D,M
			8,5x19	92	Image Colt L.Gun	42	47	10	2876,-	Maks bel. 750 kg	D,M
			8,5x20	7	Nitro Spark G.Blk/Grey	45	47	4	4660,-	Maks bel. 750 kg	D
			8,5x20	8	Nitro Spark G.Blk/Red	45	47	4	4660,-	Maks bel. 750 kg	D
			8,5x20	11	Nitro Demon	45	47	4	3808,-		D
			8,5x20	36	Image Colt	42	47	10	3432,-	Maks bel. 750 kg	D,M
			8,5x20	53	Nitro Hammer	42	47	10	4268,-		D
			8,5x20	92	Image Colt L.Gun	42	47	10	3276,-	Maks bel. 750 kg	D,M
OPEL				PCD: **5-114,3** Bolt - Mutter: **14x1,50B**		CB: **66,1**					
Vivaro	12.14-03.19	16-20	6,5x16	54	Image Vector	50	50	0	1956,-	**OE-fit**	B,D
			6,5x16	55	Image Vector Slv	50	50	0	1956,-	**OE-fit**	B,D
			7x17	54	Image Vector	50	50	0	2576,-	**OE-fit**	B,D
			7x17	55	Image Vector Slv	50	50	0	2576,-	**OE-fit**	B,D
			8x18	53	Nitro Hammer	45	50	10	3256,-	**OE-fit**	B,D
			8,5x20	1	Nitro Throne FF	40	50	20	5060,-	Maks bel. 900 kg	B,M
			8,5x20	53	Nitro Hammer	45	50	10	4268,-	**OE-fit**	B,D
OPEL				PCD: **5-108** Bolt - Mutter: **12x1,25B**		CB: **65,1**					
Vivaro (F7)	04.19-	16-20	6,5x16	54	Image Vector	46	46	0	1956,-	**OE-fit**, Maks bel. 900 kg	B,D
Zafira Life	03.19-	16-20	6,5x16	55	Image Vector Slv	46	46	0	1956,-	**OE-fit**	B,D
2.0D (130kW) 17"			7x17	54	Image Vector	46	46	0	2576,-	**OE-fit**	B,D
			7x17	55	Image Vector Slv	46	46	0	2576,-	**OE-fit**	B,D
			8x18	53	Nitro Hammer	42	46	8	3256,-		D
			8,5x20	53	Nitro Hammer	42	46	8	4268,-		D
OPEL				PCD: **5-130** Bolt - Mutter: **14x1,50B**		CB: **89,1**					
Movano	08.00-03.10	16-18	6,5x16	58	Image Strong	62	66	8	2500,-		D
Movano (MR) fwd	04.10-	16-18	6,5x16	59	Image Strong M.Gun	62	66	8	2500,-		D
2.8t, 3.3t, 3.5t			6,5x16	61	Image Solid	66	66	0	2552,-	Maks bel. 1400 kg	D
Movano (MR) rwd	04.10-	16-18									
3.5t											
OPEL				PCD: **6-139,7** Bolt - Mutter: **12x1,50**		CB: **110,0**					
Campo 4wd	01.88-12.03	15-18	8x16	78	Advanti Peak	5	38	66	2692,-		D
Frontera	06.90-08.04	15-18									
Monterey	10.92-08.05	15-18									
PEUGEOT				PCD: **4-100** Bolt - Mutter: **12x1,50B**		CB: **54,1**					
107 (P)	09.05-06.14	14-17	5x14	34	CSP 16	35	39	8	1176,-		D
			5x14	35	CSP 16 M.Gun	35	39	8	1176,-		D
			5x14	37	Image Comet	35	39	8	1264,-		D
			5x15	37	Image Comet	35	39	8	1316,-		D
			5x15	38	Image Comet Slv	35	39	8	1316,-		D
			5,5x15	34	CSP 16	36	39	6	1228,-		D
			6x15	19	ATS Streetrallye Slv	38	39	2	1960,-		
			6x15	42	Image Brio	40	39	-2	1304,-		
			6x15	45	Image Ride	38	39	2	1552,-		
			6x16	37	Image Comet	40	39	-2	1536,-		
			6x16	38	Image Comet Slv	40	39	-2	1536,-		
PEUGEOT				PCD: **4-100** Bolt - Mutter: **12x1,50B**		CB: **54,1**					
108 (P)	07.14-	14-18	5x14	34	CSP 16	35	35	0	1176,-		D
			5x14	35	CSP 16 M.Gun	35	35	0	1176,-		D
			5x14	37	Image Comet	35	35	0	1264,-		D
			5x15	37	Image Comet	35	35	0	1316,-		D
			5x15	38	Image Comet Slv	35	35	0	1316,-		D
			5,5x15	34	CSP 16	36	35	-2	1228,-		D
			6x15	19	ATS Streetrallye Slv	38	35	-6	1960,-		
			6x15	42	Image Brio	40	35	-10	1304,-		
			6x16	37	Image Comet	40	35	-10	1536,-		
			6x16	38	Image Comet Slv	40	35	-10	1536,-		

Bilmerke - Bilmodell	Årsmodell	Dimensjon	Felgdim.	Bilde	Felgmodell	ET Felg	ET Bil	Avvik ET	Veil. Pris eks. MVA	Merknader	B,C D, M
PEUGEOT				PCD: **4-108** Bolt - Mutter: **12x1,25B**		CB: **65,1**					
1007 (K)	07.05-11.09	14-18	5,5x14	38	Image Comet Slv	24	27	6	1264,-	**OE-fit**	B,D
206	10.98-11.06	14-18	6x15	19	ATS Streetrallye Slv	23	27	8	1960,-		D
1.6HDi (80kW), 2.0 GTI 15"			6x15	37	Image Comet	23	27	8	1316,-	**OE-fit**	B,D
2.0i RC 15"			6x15	38	Image Comet Slv	23	27	8	1316,-	**OE-fit**	B,D
206 cab	10.00-02.07	15-18	6,5x15	42	Image Brio	20	27	14	1304,-		D
206+	04.09-12.12	14-18	6x16	19	ATS Streetrallye Slv	23	27	8	2240,-		D
207 (W)	06.06-06.15	15-19	6x16	37	Image Comet	23	27	8	1536,-	**OE-fit**	B,D
1.6 Turbo (110/128kW) 16"			6,5x16	19	ATS Streetrallye Slv	20	27	14	2240,-		D
207 (W) cab	03.07-06.15	16-19	6,5x16	42	Image Brio	20	27	14	1524,-		D
208 (C)	05.12-09.19	15-19	7x17	18	ATS Streetrallye Blk	25	27	4	3344,-		D
1.6 Turbo (115kW) 16"			7x17	42	Image Brio	18	27	18	1832,-		D
GTI (147kW) 16"			7,5x18	18	ATS Streetrallye Blk	22	27	10	4180,-		D
3008 (0U)	06.09-09.16	16-20									
307	06.01-09.07	15-20									
2.0 (103kW) 16"											
307 cab	11.03-02.09	16-20									
307 sw	06.01-09.07	15-20									
2.0 (103kW) 16"											
308 (4)	10.07-08.13	15-20									
1.6 Turbo, 2.0HDi 16"											
GTI (147kW) 17"											
308 (4) cab	10.07-03.15	16-20									
GTI (147kW) 17"											
5008 (0)	10.09-02.17	16-20									
Partner (7) Tepee	05.08-08.18	15-20									
PEUGEOT				PCD: **4-108** Bolt - Mutter: **12x1,25B**		CB: **65,1**					
208 (C) GTI	05.12-09.19	17-19	7x17	18	ATS Streetrallye Blk	25	20	-10	3344,-		D
GTI by Peugeot sport 18"			7x17	42	Image Brio	18	20	4	1832,-		D
			7,5x18	18	ATS Streetrallye Blk	22	20	-4	4180,-		D
PEUGEOT				PCD: **4-108** Bolt - Mutter: **12x1,25B**		CB: **65,1**					
2008 (U)	11.19-	16-20	6x15	37	Image Comet	32	38	12	1316,-	**OE-fit**	B,D
208 (U)	11.19-	15-19	6x15	38	Image Comet Slv	32	38	12	1316,-	**OE-fit**	B,D
1.2T (74kW), 1.5D (75kW) 16"			6x15	42	Image Brio	32	38	12	1304,-		D
1.2T (96kW) 16"			6x16	37	Image Comet	35	38	6	1536,-	**OE-fit**	B,D
e-208 (U)	11.19-	16-19	6x16	38	Image Comet Slv	35	38	6	1536,-	**OE-fit**	B,D
			6,5x16	42	Image Brio	38	38	0	1524,-		D
			7x17	42	Image Brio	38	38	0	1832,-		D
PEUGEOT				PCD: **5-108** Bolt - Mutter: **12x1,25B**		CB: **65,1**					
308 (L)	09.13-	15-20	6x15	17	BM Drive M.Gun	40	44	8	1276,-		D
1.6 Turbo (115kW) 16"			6x15	48	Image Motion	40	44	8	1224,-		D
308 (L) sw	03.14-	15-20	6x15	49	Image Motion G.Gun	40	44	8	1224,-		D
1.6 Turbo (115kW) 16"			6,5x16	36	Image Colt	40	44	8	1624,-		D
1.6HDi (88kW), 2.0HDi 16"			6,5x16	92	Image Colt L.Gun	40	44	8	1548,-		D
			7x16	17	BM Drive M.Gun	40	44	8	1476,-		D
			7x16	40	Image Spirit	40	44	8	1264,-		D
			7x16	46	Image Stella	40	44	8	1548,-		D
			7x16	47	Image Stella M.Blk	40	44	8	1548,-		D
			7x16	48	Image Motion	40	44	8	1468,-		D
			7x16	49	Image Motion G.Gun	40	44	8	1468,-		D
			7x16	50	Image Legend	40	44	8	1544,-		D
			7x17	40	Image Spirit	42	44	4	1476,-		D
			7x17	46	Image Stella	42	44	4	1812,-		D
			7x17	47	Image Stella M.Blk	42	44	4	1812,-		D
			7,5x17	36	Image Colt	40	44	8	1956,-		D
			7,5x17	50	Image Legend	40	44	8	1812,-		D
			7,5x17	92	Image Colt L.Gun	40	44	8	1876,-		D
			8x17	17	BM Drive M.Gun	45	44	-2	1736,-		D
			8x17	48	Image Motion	45	44	-2	1736,-		D
			8x18	7	Nitro Spark G.Blk/Grey	45	44	-2	3476,-		D
			8x18	8	Nitro Spark G.Blk/Red	45	44	-2	3476,-		D
			8x18	11	Nitro Demon	40	44	8	2784,-		D
			8x18	17	BM Drive M.Gun	45	44	-2	2296,-		D
			8x18	36	Image Colt	42	44	4	2412,-		D
			8x18	48	Image Motion	45	44	-2	2204,-		D
			8x18	92	Image Colt L.Gun	42	44	4	2296,-		D
			8x19	11	Nitro Demon	40	44	8	3376,-		D
			8x19	48	Image Motion	45	44	-2	2532,-		D
			8,5x19	36	Image Colt	42	44	4	3028,-		D,M
			8,5x19	92	Image Colt L.Gun	42	44	4	2876,-		D,M
			8,5x20	7	Nitro Spark G.Blk/Grey	45	44	-2	4660,-		D,M
			8,5x20	8	Nitro Spark G.Blk/Red	45	44	-2	4660,-		D,M
			8,5x20	11	Nitro Demon	45	44	-2	3808,-		D,M
			8,5x20	36	Image Colt	42	44	4	3432,-		D,M
			8,5x20	92	Image Colt L.Gun	42	44	4	3276,-		D,M
PEUGEOT				PCD: **5-108** Bolt - Mutter: **12x1,25B**		CB: **65,1**					
308 (L) GT	01.15-	17-20	7,5x17	36	Image Colt	40	42	4	1956,-		D
308 (L) GTI	08.15-	19-20	7,5x17	50	Image Legend	40	42	4	1812,-		D
308 (L) sw GT	01.15-	17-20	7,5x17	92	Image Colt L.Gun	40	42	4	1876,-		D
			8x17	17	BM Drive M.Gun	45	42	-6	1736,-		D
			8x18	11	Nitro Demon	40	42	4	2784,-		D
			8x18	17	BM Drive M.Gun	45	42	-6	2296,-		D
			8x18	36	Image Colt	42	42	0	2412,-		D
			8x18	48	Image Motion	45	42	-6	2204,-		D
			8x18	92	Image Colt L.Gun	42	42	0	2296,-		D
			8x19	11	Nitro Demon	40	42	4	3376,-		D

Forts. neste side »

Bilmerke - Bilmodell	Årsmodell	Dimensjon	Felgdim.	Bilde	Felgmodell	ET Felg	ET Bil	Avvik ET	Veil. Pris eks. MVA	Merknader	B,C D, M
PEUGEOT (forts.)			PCD: **5-108** Bolt - Mutter: **12x1,25B**			CB: **65,1**					
			8x19	48	Image Motion	45	42	-6	2532,-		D
			8,5x19	36	Image Colt	42	42	0	3028,-		D,M
			8,5x19	92	Image Colt L.Gun	42	42	0	2876,-		D,M
			8,5x20	11	Nitro Demon	45	42	-6	3808,-		D,M
			8,5x20	36	Image Colt	42	42	0	3432,-		D,M
			8,5x20	92	Image Colt L.Gun	42	42	0	3276,-		D,M
PEUGEOT			PCD: **4-108** Bolt - Mutter: **12x1,25B**			CB: **65,1**					
106 4-bult	01.92-08.05	13-17	5,5x14	38	Image Comet Slv	24	18	-12	1264,-	**OE-fit**	B,D
2008 (C)	06.13-10.19	15-19	6x15	37	Image Comet	23	18	-10	1316,-	**OE-fit**	B,D
1.2T (96kW) 16"			6x15	38	Image Comet Slv	23	18	-10	1316,-	**OE-fit**	B,D
205	01.86-07.96	13-16	6,5x15	42	Image Brio	20	18	-4	1304,-		D
306	03.93-05.01	13-18	6x16	37	Image Comet	23	18	-10	1536,-	**OE-fit**	B,D
309	10.85-02.93	13-17	6,5x16	19	ATS Streetrallye Slv	20	18	-4	2240,-		D
405	09.87-09.95	14-18	6,5x16	42	Image Brio	20	18	-4	1524,-		D
Turbo 16"			7x17	42	Image Brio	18	18	0	1832,-		D
406 sedan	10.95-04.04	14-20									
1.9TD, 2.0, 2.0HDi, 2.2 15"											
2.2HDi, 3.0 15"											
406 sw	10.95-04.04	14-20									
1.9TD, 2.0, 2.0HDi, 2.2 15"											
2.2HDi, 3.0 15"											
Boxline	06.05-	14-18									
Partner	09.96-04.08	14-18									
1.6i (80kW) 03.03- 15"											
2.0HDi (66kW) 03.03- 15"											
Partner Origin	05.08-12.09	14-19									
PEUGEOT			PCD: **5-108** Bolt - Mutter: **12x1,25B**			CB: **65,1**					
407 coupe	12.05-12.10	17-20	6,5x16	36	Image Colt	40	44	8	1624,-		D
2.7HDi, 3.0 18"			6,5x16	92	Image Colt L.Gun	40	44	8	1548,-		D
407 sedan	05.04-12.10	16-20	7x16	17	BM Drive M.Gun	40	44	8	1476,-		D
2.2 3.0 17"			7x16	40	Image Spirit	40	44	8	1264,-		D
407 sw	05.04-12.10	16-20	7x16	46	Image Stella	40	44	8	1548,-		D
2.2 3.0 17"			7x16	47	Image Stella M.Blk	40	44	8	1548,-		D
			7x16	48	Image Motion	40	44	8	1468,-		D
			7x16	49	Image Motion G.Gun	40	44	8	1468,-		D
			7x16	50	Image Legend	40	44	8	1544,-		D
			7x17	40	Image Spirit	42	44	4	1476,-		D
			7x17	46	Image Stella	42	44	4	1812,-		D
			7x17	47	Image Stella M.Blk	42	44	4	1812,-		D
			7,5x17	36	Image Colt	40	44	8	1956,-		D
			7,5x17	50	Image Legend	40	44	8	1812,-		D
			7,5x17	92	Image Colt L.Gun	40	44	8	1876,-		D
			8x17	17	BM Drive M.Gun	45	44	-2	1736,-		D
			8x17	48	Image Motion	45	44	-2	1736,-		D
			8x18	7	Nitro Spark G.Blk/Grey	45	44	-2	3476,-		D
			8x18	8	Nitro Spark G.Blk/Red	45	44	-2	3476,-		D
			8x18	11	Nitro Demon	40	44	8	2784,-		D
			8x18	17	BM Drive M.Gun	45	44	-2	2296,-		D
			8x18	36	Image Colt	42	44	4	2412,-		D
			8x18	48	Image Motion	45	44	-2	2204,-		D
			8x18	92	Image Colt L.Gun	42	44	4	2296,-		D
			8x19	11	Nitro Demon	40	44	8	3376,-		D
			8x19	48	Image Motion	45	44	-2	2532,-		D
			8,5x19	36	Image Colt	42	44	4	3028,-		D,M
			8,5x19	92	Image Colt L.Gun	42	44	4	2876,-		D,M
			8,5x20	7	Nitro Spark G.Blk/Grey	45	44	-2	4660,-		D,M
			8,5x20	8	Nitro Spark G.Blk/Red	45	44	-2	4660,-		D,M
			8,5x20	11	Nitro Demon	45	44	-2	3808,-		D,M
			8,5x20	36	Image Colt	42	44	4	3432,-		D,M
			8,5x20	92	Image Colt L.Gun	42	44	4	3276,-		D,M
PEUGEOT			PCD: **5-108** Bolt - Mutter: **12X1,25B**			CB: **65,1**					
508 (8) RXH	06.12-12.17	17-21	6,5x16	36	Image Colt	40	46	12	1624,-		D
508 (8) sedan	03.11-10.18	16-20	6,5x16	92	Image Colt L.Gun	40	46	12	1548,-		D
2.2HDi 18"			7x16	17	BM Drive M.Gun	40	46	12	1476,-		D
508 (8) sw	03.11-10.18	16-20	7x16	40	Image Spirit	40	46	12	1264,-		D
2.2HDi 18"			7x16	46	Image Stella	40	46	12	1548,-		D
			7x16	47	Image Stella M.Blk	40	46	12	1548,-		D
			7x16	48	Image Motion	40	46	12	1468,-		D
			7x16	49	Image Motion G.Gun	40	46	12	1468,-		D
			7x16	50	Image Legend	40	46	12	1544,-		D
			7x17	40	Image Spirit	42	46	8	1476,-		D
			7x17	46	Image Stella	42	46	8	1812,-		D
			7x17	47	Image Stella M.Blk	42	46	8	1812,-		D
			7,5x17	36	Image Colt	40	46	12	1956,-		D
			7,5x17	50	Image Legend	40	46	12	1812,-		D
			7,5x17	92	Image Colt L.Gun	40	46	12	1876,-		D
			8x17	17	BM Drive M.Gun	45	46	2	1736,-		D
			8x17	48	Image Motion	45	46	2	1736,-		D
			8x18	7	Nitro Spark G.Blk/Grey	45	46	2	3476,-		D
			8x18	8	Nitro Spark G.Blk/Red	45	46	2	3476,-		D
			8x18	11	Nitro Demon	40	46	12	2784,-		D
			8x18	17	BM Drive M.Gun	45	46	2	2296,-		D
			8x18	36	Image Colt	42	46	8	2412,-		D
			8x18	48	Image Motion	45	46	2	2204,-		D
			8x18	53	Nitro Hammer	42	46	8	3256,-		D

Forts. neste side »

Bilmerke - Bilmodell	Årsmodell	Dimensjon	Felgdim.	Bilde	Felgmodell	ET Felg	ET Bil	Avvik ET	Veil. Pris eks. MVA	Merknader	B,C D, M
PEUGEOT (forts.)				PCD: **5-108** Bolt - Mutter: **12X1,25B** CB: **65,1**							
			8x18	92	Image Colt L.Gun	42	46	8	2296,-		D
			8x19	11	Nitro Demon	40	46	12	3376,-		D
			8x19	48	Image Motion	45	46	2	2532,-		D
			8,5x19	36	Image Colt	42	46	8	3028,-		D
			8,5x19	92	Image Colt L.Gun	42	46	8	2876,-		D
			8,5x20	7	Nitro Spark G.Blk/Grey	45	46	2	4660,-		D
			8,5x20	8	Nitro Spark G.Blk/Red	45	46	2	4660,-		D
			8,5x20	11	Nitro Demon	45	46	2	3808,-		D
			8,5x20	36	Image Colt	42	46	8	3432,-		D
			8,5x20	53	Nitro Hammer	42	46	8	4268,-		D
			8,5x20	92	Image Colt L.Gun	42	46	8	3276,-		D
PEUGEOT				PCD: **5-108** Bolt - Mutter: **12x1,25B** CB: **65,1**							
508 (F) sedan	11.18-	17-21	7,5x17	36	Image Colt	40	44	8	1956,-		D
1.6 Turbo (165kW) 18"			7,5x17	50	Image Legend	40	44	8	1812,-		D
508 (F) sw	11.18-	17-21	7,5x17	92	Image Colt L.Gun	40	44	8	1876,-		D
1.6 Turbo (165kW) 18"			8x17	17	BM Drive M.Gun	45	44	-2	1736,-		D
			8x17	48	Image Motion	45	44	-2	1736,-		D
			8x18	7	Nitro Spark G.Blk/Grey	45	44	-2	3476,-		D
			8x18	8	Nitro Spark G.Blk/Red	45	44	-2	3476,-		D
			8x18	11	Nitro Demon	40	44	8	2784,-		D
			8x18	17	BM Drive M.Gun	45	44	-2	2296,-		D
			8x18	36	Image Colt	42	44	4	2412,-		D
			8x18	48	Image Motion	45	44	-2	2204,-		D
			8x18	92	Image Colt L.Gun	42	44	4	2296,-		D
			8x19	11	Nitro Demon	40	44	8	3376,-		D
			8x19	48	Image Motion	45	44	-2	2532,-		D
			8,5x19	36	Image Colt	42	44	4	3028,-		D
			8,5x19	92	Image Colt L.Gun	42	44	4	2876,-		D
			9x19	12	Nitro Edge M.Blk	45	44	-2	3884,-		M
			8,5x20	7	Nitro Spark G.Blk/Grey	45	44	-2	4660,-		D
			8,5x20	8	Nitro Spark G.Blk/Red	45	44	-2	4660,-		D
			8,5x20	11	Nitro Demon	45	44	-2	3808,-		D
			8,5x20	36	Image Colt	42	44	4	3432,-		D
			8,5x20	92	Image Colt L.Gun	42	44	4	3276,-		D
			9x20	12	Nitro Edge M.Blk	45	44	-2	4220,-		M
PEUGEOT				PCD: **5-108** Bolt - Mutter: **12x1,25B** CB: **65,1**							
3008 (M)	10.16-	17-21	7x17	40	Image Spirit	42	49	14	1476,-		D
Hybrid 18"			7x17	46	Image Stella	42	49	14	1812,-		D
5008 (M)	03.17-	17-21	7x17	47	Image Stella M.Blk	42	49	14	1812,-		D
			7,5x17	36	Image Colt	40	49	18	1956,-		D
			7,5x17	50	Image Legend	40	49	18	1812,-		D
			7,5x17	92	Image Colt L.Gun	40	49	18	1876,-		D
			8x17	17	BM Drive M.Gun	45	49	8	1736,-		D
			8x17	48	Image Motion	45	49	8	1736,-		D
			8x18	8	Nitro Spark G.Blk/Red	45	49	8	3476,-		D
			8x18	11	Nitro Demon	40	49	18	2784,-		D
			8x18	17	BM Drive M.Gun	45	49	8	2296,-		D
			8x18	36	Image Colt	42	49	14	2412,-		D
			8x18	48	Image Motion	45	49	8	2204,-		D
			8x18	53	Nitro Hammer	42	49	14	3256,-		D
			8x18	92	Image Colt L.Gun	42	49	14	2296,-		D
			8x19	11	Nitro Demon	40	49	18	3376,-		D
			8x19	48	Image Motion	45	49	8	2532,-		D
			8,5x19	36	Image Colt	42	49	14	3028,-		D,M
			8,5x19	92	Image Colt L.Gun	42	49	14	2876,-		D,M
			8,5x20	7	Nitro Spark G.Blk/Grey	45	49	8	4660,-		D,M
			8,5x20	8	Nitro Spark G.Blk/Red	45	49	8	4660,-		D,M
			8,5x20	11	Nitro Demon	45	49	8	3808,-		D,M
			8,5x20	36	Image Colt	42	49	14	3432,-		D,M
			8,5x20	53	Nitro Hammer	42	49	14	4268,-		D
			8,5x20	92	Image Colt L.Gun	42	49	14	3276,-		D,M
PEUGEOT				PCD: **5-114,3** Bolt - Mutter: **12x1,50** CB: **67,1**							
4007 (V)	09.07-04.12	16-20	6,5x16	34	CSP 16	38	38	0	1468,-	**OE-fit**, OE-mutter styrning/bricka	B,D
4008 (B)	05.12-	16-21	6,5x16	36	Image Colt	35	38	6	1624,-		
			6,5x16	48	Image Motion	38	38	0	1468,-	**OE-fit**, OE-mutter styrning/bricka	B,D
			6,5x16	92	Image Colt L.Gun	35	38	6	1548,-		
			7x17	34	CSP 16	38	38	0	1836,-	**OE-fit**, OE-mutter styrning/bricka	B,D
			7x17	40	Image Spirit	38	38	0	1476,-	**OE-fit**	B,D
			7x17	46	Image Stella	38	38	0	1812,-	**OE-fit**	B,D
			7x17	47	Image Stella M.Blk	38	38	0	1812,-	**OE-fit**	B,D
			7x17	48	Image Motion	38	38	0	1736,-	**OE-fit**, OE-mutter styrning/bricka	B,D
			7,5x17	9	Nitro Sabre G.Blk	35	38	6	3052,-		
			7,5x17	36	Image Colt	35	38	6	1956,-		
			7,5x17	92	Image Colt L.Gun	35	38	6	1876,-		
			7,5x18	2	Nitro Sapphire FF	35	38	6	3944,-		
			7,5x18	34	CSP 16	38	38	0	2444,-	**OE-fit**, OE-mutter styrning/bricka	B,D
			7,5x18	46	Image Stella	38	38	0	2276,-	**OE-fit**	B,D
			7,5x18	47	Image Stella M.Blk	38	38	0	2276,-	**OE-fit**	B,D
			8x18	7	Nitro Spark G.Blk/Grey	35	38	6	3476,-		
			8x18	8	Nitro Spark G.Blk/Red	35	38	6	3476,-		
			8x18	9	Nitro Sabre G.Blk	35	38	6	3496,-		
			8x18	16	Advanti Inizio DST	35	38	6	3828,-		
			8x18	36	Image Colt	35	38	6	2412,-		
			8x18	92	Image Colt L.Gun	35	38	6	2296,-		
			7,5x19	2	Nitro Sapphire FF	35	38	6	4572,-		

Forts. neste side »

Bilmerke - Bilmodell	Årsmodell	Dimensjon	Felgdim.	Bilde	Felgmodell	ET Felg	ET Bil	Avvik ET	Veil. Pris eks. MVA	Merknader	B,C D, M
PEUGEOT (forts.)			PCD: **5-114,3** Bolt - Mutter: **12x1,50** CB: **67,1**								
			8x19	11	Nitro Demon	38	38	0	3376,-		
			8x19	16	Advanti Inizio DST	35	38	6	4412,-		
			8,5x19	5	Nitro Volcano G.Gun	35	38	6	4388,-		
			8,5x19	6	Nitro Volcano	35	38	6	4632,-		
			8,5x19	9	Nitro Sabre G.Blk	35	38	6	4292,-		
			8,5x19	36	Image Colt	35	38	6	3028,-		M
			8,5x19	92	Image Colt L.Gun	35	38	6	2876,-		M
			8x20	2	Nitro Sapphire FF	35	38	6	5096,-		
			8,5x20	1	Nitro Throne FF	40	38	-4	5060,-		M
			8,5x20	5	Nitro Volcano G.Gun	35	38	6	4824,-		
			8,5x20	6	Nitro Volcano	35	38	6	5164,-		
			8,5x20	7	Nitro Spark G.Blk/Grey	35	38	6	4660,-		M
			8,5x20	8	Nitro Spark G.Blk/Red	35	38	6	4660,-		M
			8,5x20	9	Nitro Sabre G.Blk	35	38	6	4800,-		
			8,5x20	11	Nitro Demon	38	38	0	3808,-		
			8,5x20	36	Image Colt	35	38	6	3432,-		M
			8,5x20	92	Image Colt L.Gun	35	38	6	3276,-		M
			9x21	5	Nitro Volcano G.Gun	35	38	6	5540,-		M
			9x21	6	Nitro Volcano	35	38	6	5996,-		M
PEUGEOT			PCD: **4-98** Bolt - Mutter: **12x1,25B** CB: **58,1**								
Bipper (225)	02.08-	14-18	5,5x14	37	Image Comet	35	44	18	1264,-	**OE-fit**	B,D
Bipper (A) Tepee	07.08-	15-18	5,5x14	38	Image Comet Slv	35	44	18	1264,-	**OE-fit**	B,D
			5,5x14	45	Image Ride	38	44	12	1392,-	Eksenterbolter	
			6x15	19	ATS Streetrallye Slv	35	44	18	1960,-		D
			6x15	34	CSP 16	40	44	8	1228,-	**OE-fit**	B,D
			6x15	37	Image Comet	40	44	8	1316,-	**OE-fit**	B,D
			6x15	38	Image Comet Slv	40	44	8	1316,-	**OE-fit**	B,D
			6x15	45	Image Ride	38	44	12	1552,-	Eksenterbolter	
			6x16	37	Image Comet	40	44	8	1536,-	**OE-fit**	B,D
			6x16	38	Image Comet Slv	40	44	8	1536,-	**OE-fit**	B,D
			6,5x16	19	ATS Streetrallye Slv	35	44	18	2240,-		D
PEUGEOT			PCD: **5-108** Bolt - Mutter: **12x1,25B** CB: **65,1**								
Rifter (E)	09.18-	15-20	6x15	17	BM Drive M.Gun	40	42	4	1276,-		D
			6x15	48	Image Motion	40	42	4	1224,-		D
			6x15	49	Image Motion G.Gun	40	42	4	1224,-		D
			6,5x16	36	Image Colt	40	42	4	1624,-	Maks bel. 700 kg	D
			6,5x16	48	Image Motion	47	42	-10	1468,-	**OE-fit**, Maks bel. 700 kg	B,D
			6,5x16	54	Image Vector	46	42	-8	1956,-	**OE-fit**, Maks bel. 900 kg	B,D
			6,5x16	55	Image Vector Slv	46	42	-8	1956,-	**OE-fit**	B,D
			6,5x16	92	Image Colt L.Gun	40	42	4	1548,-	Maks bel. 700 kg	D
			7x16	17	BM Drive M.Gun	40	42	4	1476,-		D
			7x16	46	Image Stella	40	42	4	1548,-	Maks bel. 690 kg	D
			7x16	47	Image Stella M.Blk	40	42	4	1548,-	Maks bel. 690 kg	D
			7x16	48	Image Motion	40	42	4	1468,-		D
			7x16	49	Image Motion G.Gun	40	42	4	1468,-		D
			7x16	50	Image Legend	40	42	4	1544,-		D
			7x17	46	Image Stella	42	42	0	1812,-	Maks bel. 690 kg	D
			7x17	47	Image Stella M.Blk	42	42	0	1812,-	31400897	D
			7x17	54	Image Vector	46	42	-8	2576,-	**OE-fit**	B,D
			7x17	55	Image Vector Slv	46	42	-8	2576,-	**OE-fit**	B,D
			7,5x17	36	Image Colt	40	42	4	1956,-	Maks bel. 750 kg	D
			7,5x17	50	Image Legend	40	42	4	1812,-		D
			7,5x17	92	Image Colt L.Gun	40	42	4	1876,-	Maks bel. 750 kg	D
			8x17	17	BM Drive M.Gun	45	42	-6	1736,-		D
			8x17	48	Image Motion	45	42	-6	1736,-		D
			8x18	7	Nitro Spark G.Blk/Grey	45	42	-6	3476,-		D
			8x18	8	Nitro Spark G.Blk/Red	45	42	-6	3476,-		D
			8x18	11	Nitro Demon	40	42	4	2784,-		D
			8x18	17	BM Drive M.Gun	45	42	-6	2296,-		D
			8x18	36	Image Colt	42	42	0	2412,-	Maks bel. 750 kg	D
			8x18	48	Image Motion	45	42	-6	2204,-		D
			8x18	53	Nitro Hammer	42	42	0	3256,-		D
			8x18	92	Image Colt L.Gun	42	42	0	2296,-	Maks bel. 750 kg	D
			8x19	11	Nitro Demon	40	42	4	3376,-		D
			8x19	48	Image Motion	45	42	-6	2532,-		D
			8,5x19	36	Image Colt	42	42	0	3028,-	Maks bel. 750 kg	D,M
			8,5x19	92	Image Colt L.Gun	42	42	0	2876,-	Maks bel. 750 kg	D,M
			8,5x20	36	Image Colt	42	42	0	3432,-	Maks bel. 750 kg	D,M
			8,5x20	92	Image Colt L.Gun	42	42	0	3276,-	Maks bel. 750 kg	D,M
PEUGEOT			PCD: **5-108** Bolt - Mutter: **12x1,25B** CB: **65,1**								
Partner (E)	12.18-	15-20	6x15	17	BM Drive M.Gun	40	47	14	1276,-		D
1.2, 1.5 (75/96kW) 16"			6x15	48	Image Motion	40	47	14	1224,-		D
			6x15	49	Image Motion G.Gun	40	47	14	1224,-		D
			6,5x16	36	Image Colt	40	47	14	1624,-	Maks bel. 700 kg	D
			6,5x16	48	Image Motion	47	47	0	1468,-	**OE-fit**, Maks bel. 700 kg	B,D
			6,5x16	54	Image Vector	46	47	2	1956,-	**OE-fit**, Maks bel. 900 kg	B,D
			6,5x16	55	Image Vector Slv	46	47	2	1956,-	**OE-fit**	B,D
			6,5x16	92	Image Colt L.Gun	40	47	14	1548,-	Maks bel. 700 kg	D
			7x16	17	BM Drive M.Gun	40	47	14	1476,-		D
			7x16	46	Image Stella	40	47	14	1548,-	Maks bel. 690 kg	D
			7x16	47	Image Stella M.Blk	40	47	14	1548,-	Maks bel. 690 kg	D
			7x16	49	Image Motion G.Gun	40	47	14	1468,-		D
			7x16	50	Image Legend	40	47	14	1544,-		D
			7x17	46	Image Stella	42	47	10	1812,-	Maks bel. 690 kg	D
			7x17	47	Image Stella M.Blk	42	47	10	1812,-	31400897	D

Forts. neste side »

Bilmerke - Bilmodell	Årsmodell	Dimensjon	Felgdim.	Bilde	Felgmodell	ET Felg	ET Bil	Avvik ET	Veil. Pris eks. MVA	Merknader	B,C D, M
PEUGEOT (forts.)				PCD: **5-108** Bolt - Mutter: **12x1,25B**	CB: **65,1**						
			7x17	54	Image Vector	46	47	2	2576,-	**OE-fit**	B,D
			7x17	55	Image Vector Slv	46	47	2	2576,-	**OE-fit**	B,D
			7,5x17	36	Image Colt	40	47	14	1956,-	Maks bel. 750 kg	D
			7,5x17	50	Image Legend	40	47	14	1812,-		D
			7,5x17	92	Image Colt L.Gun	40	47	14	1876,-	Maks bel. 750 kg	D
			8x17	17	BM Drive M.Gun	45	47	4	1736,-		D
			8x17	48	Image Motion	45	47	4	1736,-		D
			8x18	7	Nitro Spark G.Blk/Grey	45	47	4	3476,-	Maks bel. 750 kg	D
			8x18	8	Nitro Spark G.Blk/Red	45	47	4	3476,-	Maks bel. 750 kg	D
			8x18	11	Nitro Demon	40	47	14	2784,-		D
			8x18	17	BM Drive M.Gun	45	47	4	2296,-		D
			8x18	36	Image Colt	42	47	10	2412,-	Maks bel. 750 kg	D
			8x18	48	Image Motion	45	47	4	2204,-		D
			8x18	53	Nitro Hammer	42	47	10	3256,-		D
			8x18	92	Image Colt L.Gun	42	47	10	2296,-	Maks bel. 750 kg	D
			8x19	11	Nitro Demon	40	47	14	3376,-		D
			8x19	48	Image Motion	45	47	4	2532,-		D
			8,5x19	36	Image Colt	42	47	10	3028,-	Maks bel. 750 kg	D,M
			8,5x19	92	Image Colt L.Gun	42	47	10	2876,-	Maks bel. 750 kg	D,M
			8,5x20	7	Nitro Spark G.Blk/Grey	45	47	4	4660,-	Maks bel. 750 kg	D
			8,5x20	8	Nitro Spark G.Blk/Red	45	47	4	4660,-	Maks bel. 750 kg	D
			8,5x20	11	Nitro Demon	45	47	4	3808,-		D
			8,5x20	36	Image Colt	42	47	10	3432,-	Maks bel. 750 kg	D,M
			8,5x20	53	Nitro Hammer	42	47	10	4268,-		D
			8,5x20	92	Image Colt L.Gun	42	47	10	3276,-	Maks bel. 750 kg	D,M
PEUGEOT				PCD: **5-108** Bolt - Mutter: **12x1,25B**	CB: **65,1**						
Expert II	10.06-05.16	15-19	8x18	53	Nitro Hammer	42	42	0	3256,-		D
2.0HDi 16"			8,5x20	53	Nitro Hammer	42	42	0	4268,-	Maks bel. 880 kg	D,M
PEUGEOT				PCD: **5-108** Bolt - Mutter: **12x1,25B**	CB: **65,1**						
Expert (V)	06.16-	16-20	6,5x16	54	Image Vector	46	46	0	1956,-	**OE-fit**, Maks bel. 900 kg	B,D
Traveller (V)	06.16-	16-20	6,5x16	55	Image Vector Slv	46	46	0	1956,-	**OE-fit**	B,D
			7x17	54	Image Vector	46	46	0	2576,-	**OE-fit**	B,D
			7x17	55	Image Vector Slv	46	46	0	2576,-	**OE-fit**	B,D
			8x18	53	Nitro Hammer	42	46	8	3256,-		D
			8,5x20	53	Nitro Hammer	42	46	8	4268,-	Maks bel. 880 kg	D
PEUGEOT				PCD: **5-118** Bolt - Mutter: **14x1,50B**	CB: **71,1**						
Boxer (small chassis)	03.94-05.06	15-18	6x15	58	Image Strong	62	68	12	2116,-		D
Boxer (small chassis)	06.06-	15-18	6x15	59	Image Strong M.Gun	62	68	12	2116,-		D
			6,5x16	58	Image Strong	62	68	12	2500,-		D
			6,5x16	59	Image Strong M.Gun	62	68	12	2500,-		D
			6,5x16	61	Image Solid	68	68	0	2552,-	Maks bel. 1400 kg	D
			6,5x17	58	Image Strong	62	68	12	2884,-		D
			6,5x17	59	Image Strong M.Gun	62	68	12	2884,-		D
PEUGEOT				PCD: **5-130** Bolt - Mutter: **16x1,50B**	CB: **78,1**						
Boxer (large chassis)	03.94-05.06	16-18	6,5x16	58	Image Strong	62	68	12	2500,-		D
Boxer (large chassis)	06.06-	16-18	6,5x16	59	Image Strong M.Gun	62	68	12	2500,-		D
			6,5x16	61	Image Solid	68	68	0	2552,-	Maks bel. 1400 kg	D
			6,5x17	58	Image Strong	62	68	12	2884,-		D
			6,5x17	59	Image Strong M.Gun	62	68	12	2884,-		D
			7,5x18	58	Image Strong	58	68	20	3524,-	Maks bel. 1400 kg	D,M
			7,5x18	59	Image Strong M.Gun	58	68	20	3524,-	Maks bel. 1400 kg	D,M
PLYMOUTH				PCD: **5-100** Bolt - Mutter: **12x1,50**	CB: **57,1**						
Breeze	95-99	15-17	6x15	48	Image Motion	40	40	0	1224,-		
			6,5x16	36	Image Colt	40	40	0	1624,-		
			6,5x16	92	Image Colt L.Gun	40	40	0	1548,-		
PONTIAC				PCD: **5-100** Bolt - Mutter: **12x1,50**	CB: **57,1**						
Fiero (lilla bultc. 5-100)	84-88	14-17	6x15	48	Image Motion	40	42	4	1224,-		
Grand Am	85-98	14-17	6,5x16	36	Image Colt	40	42	4	1624,-		
Sunfire	95-05	15-17	6,5x16	92	Image Colt L.Gun	40	42	4	1548,-		
PONTIAC				PCD: **5-110** Bolt - Mutter: **12x1,50**	CB: **65,1**						
G5 GT coupe	08.06-	17-20	6,5x16	36	Image Colt	40	45	10	1624,-		D
G6	09.04-12.09	16-20	6,5x16	48	Image Motion	40	45	10	1468,-		D
3.5 V6, 3.6 V6 17"			6,5x16	92	Image Colt L.Gun	40	45	10	1548,-		D
			7x17	48	Image Motion	40	45	10	1736,-		D
			7,5x17	36	Image Colt	40	45	10	1956,-		D
			7,5x17	92	Image Colt L.Gun	40	45	10	1876,-		D
PONTIAC				PCD: **5-115** Bolt - Mutter: **12x1,50**	CB: **70,3**						
Bonneville	88-00	15-17	6,5x16	36	Image Colt	35	43	16	1624,-		
Bonneville	01-06	16-18	6,5x16	92	Image Colt L.Gun	35	43	16	1548,-		
Fiero (stora bultc. 5-115)	84-88	15-17	7,5x17	36	Image Colt	35	43	16	1956,-		
Grand Prix	88-05	15-17	7,5x17	46	Image Stella	41	43	4	1812,-		D
Grand Prix	05-	16-18	7,5x17	47	Image Stella M.Blk	41	43	4	1812,-		D
Torrent	06-	16-18	7,5x17	92	Image Colt L.Gun	35	43	16	1876,-		
PORSCHE				PCD: **5-130** Bolt - Mutter: **14x1,50B**	CB: **71,5**						
Taycan	12.19-	19-21	9x20	3	Nitro Turismo FF	50	54	8	4960,-	**OE-fit**	B,D
Turbo, Turbo S 20"			9x20	4	Nitro Turismo FF G.Gun/Pol	50	54	8	5048,-	**OE-fit**	B,D
			10,5x20	3	Nitro Turismo FF	64	60	-8	5116,-	**OE-fit**, kun bak	B,D
			10,5x20	4	Nitro Turismo FF G.Gun/Pol	64	60	-8	5288,-	**OE-fit**, kun bak	B,D
			11x20	3	Nitro Turismo FF	58	60	4	5296,-	**OE-fit**, kun bak	B,D
			11x20	4	Nitro Turismo FF G.Gun/Pol	58	60	4	5416,-	**OE-fit**, kun bak	B,D

Bilmerke - Bilmodell	Årsmodell	Dimensjon	Felgdim.	Bilde	Felgmodell	ET Felg	ET Bil	Avvik ET	Veil. Pris eks. MVA	Merknader	B,C D, M
PORSCHE				PCD:	Bolt - Mutter:	CB:					
Panamera (970)	09.09-09.16	18-22									
Turbo 19"											
Turbo S 20"											
PORSCHE				PCD: **5-130**	Bolt - Mutter: **14x1,50B**	CB: **71,5**					
Panamera (971)	10.16-	19-22	9,5x20	3	Nitro Turismo FF	64	64	0	4960,-	**OE-fit**	B,D
Turbo 20"			9,5x20	4	Nitro Turismo FF G.Gun/Pol	64	64	0	5048,-	**OE-fit**	B,D
Panamera (971) Sport Turismo	09.17-	19-22	11,5x20	3	Nitro Turismo FF	64	68	8	5296,-	**OE-fit**, kun bak	B,D
Turbo 20"			11,5x20	4	Nitro Turismo FF G.Gun/Pol	64	68	8	5416,-	**OE-fit**, kun bak	B,D
PORSCHE				PCD: **5-112**	Bolt - Mutter: **14x1,50B**	CB: **66,5**					
Macan (95B)	01.14-	18-22	9x20	3	Nitro Turismo FF	26	26	0	4960,-	**OE-fit**	B,C,D
Turbo 19"			9x20	4	Nitro Turismo FF G.Gun/Pol	26	26	0	5048,-	**OE-fit**	B,C,D
			9x20	12	Nitro Edge M.Blk	26	26	0	4220,-	**OE-fit**	B,D
			10x20	3	Nitro Turismo FF	19	21	4	5116,-	**OE-fit**, kun bak	B,C,D
			10x20	4	Nitro Turismo FF G.Gun/Pol	19	21	4	5288,-	**OE-fit**, kun bak	B,C,D
			10x20	12	Nitro Edge M.Blk	21	21	0	4220,-	**OE-fit**, kun bak	B,D
			9x22	12	Nitro Edge M.Blk	26	26	0	4888,-	**OE-fit**	B,D
			9,5x22	1	Nitro Throne FF	25	26	2	6276,-		D
			10x22	12	Nitro Edge M.Blk	21	21	0	4888,-	**OE-fit**, kun bak	B,D
			10,5x22	1	Nitro Throne FF	20	21	2	6572,-	Kun bak	D
PORSCHE				PCD: **5-130**	Bolt - Mutter: **14x1,50B**	CB: **71,5**					
Cayenne (92A)	04.10-11.17	18-22	9x19	12	Nitro Edge M.Blk	50	53	6	3884,-		D
Turbo 19"			9x20	3	Nitro Turismo FF	50	53	6	4960,-	**OE-fit**	B,D
Cayenne (9PA)	11.02-03.10	17-22	9x20	4	Nitro Turismo FF G.Gun/Pol	50	53	6	5048,-	**OE-fit**	B,D
V8, Turbo 18"			9x20	12	Nitro Edge M.Blk	50	53	6	4220,-		D
Turbo S 19"			9x20	15	Nitro Magnum	40	53	26	4572,-		D
			10x20	12	Nitro Edge M.Blk	48	53	10	4220,-		D
			9x22	12	Nitro Edge M.Blk	50	53	6	4888,-		D
			9x22	15	Nitro Magnum	40	53	26	5420,-		D
			10x22	12	Nitro Edge M.Blk	48	53	10	4888,-		D
			10,5x22	15	Nitro Magnum	48	53	10	5420,-	Kun bak	D,M
PORSCHE				PCD: **5-130**	Bolt - Mutter: **14x1,50B**	CB: **71,5**					
Cayenne (9YA)	12.17-	19-22	9x20	3	Nitro Turismo FF	50	50	0	4960,-	**OE-fit**	B,D
Turbo 20"			9x20	4	Nitro Turismo FF G.Gun/Pol	50	50	0	5048,-	**OE-fit**	B,D
			10,5x20	3	Nitro Turismo FF	64	64	0	5116,-	**OE-fit**, kun bak	B,D
			10,5x20	4	Nitro Turismo FF G.Gun/Pol	64	64	0	5288,-	**OE-fit**, kun bak	B,D
PORSCHE				PCD: **5-130**	Bolt - Mutter: **14x1,50**	CB: **71,5**					
Cayenne (9YA) coupe	05.19-	20-23	9x20	3	Nitro Turismo FF	50	50	0	4960,-	**OE-fit**	B,D
			9x20	4	Nitro Turismo FF G.Gun/Pol	50	50	0	5048,-	**OE-fit**	B,D
			10,5x20	3	Nitro Turismo FF	55	55	0	5116,-	**OE-fit**, kun bak	B,D
			10,5x20	4	Nitro Turismo FF G.Gun/Pol	55	55	0	5288,-	**OE-fit**, kun bak	B,D
RENAULT				PCD: **4-100**	Bolt - Mutter: **12x1,50B**	CB: **60,1**					
19	01.89-12.95	13-17	5x13	45	Image Ride	38	36	-4	1336,-		
Clio	01.91-08.98	13-16	5,5x14	45	Image Ride	38	36	-4	1392,-		
Clio (B)	09.98-08.05	13-18	6x15	45	Image Ride	38	36	-4	1552,-		
2.0i 15"											
Megane	01.96-09.02	13-18									
Megane Scenic	01.97-06.03	14-18									
Twingo	09.93-08.07	13-15									
RENAULT				PCD: **4-100**	Bolt - Mutter: **12x1,50B**	CB: **60,1**					
Twingo (AH)	09.14-	15-17	6x15	19	ATS Streetrallye Slv	38	38	0	1960,-		
			6,5x16	34	CSP 16	40	38	-4	1468,-		D
RENAULT				PCD: **4-100**	Bolt - Mutter: **12x1,50B**	CB: **60,1**					
Wind (N)	08.10-	16-17	6,5x16	19	ATS Streetrallye Slv	40	54	28	2240,-		
			6,5x16	34	CSP 16	40	54	28	1468,-		D
			7x17	18	ATS Streetrallye Blk	45	54	18	3344,-		
RENAULT				PCD: **4-100**	Bolt - Mutter: **12x1,50B**	CB: **60,1**					
Clio (R)	09.05-09.12	15-18	5,5x14	45	Image Ride	38	45	14	1392,-		
Clio (R) grandtour	05.08-01.13	15-18	6x15	19	ATS Streetrallye Slv	38	45	14	1960,-		
Grand Modus (P)	01.08-12.12	15-18	6x15	34	CSP 16	40	45	10	1228,-	**OE-fit**	B,D
Grand Scenic	04.04-08.09	16-19	6x15	35	CSP 16 M.Gun	40	45	10	1228,-	**OE-fit**	B,D
Laguna 4-bult	03.94-05.98	14-19	6x15	37	Image Comet	40	45	10	1316,-	**OE-fit**	B,D
Laguna 4-bult	06.98-02.01	15-19	6x15	38	Image Comet Slv	40	45	10	1316,-	**OE-fit**	B,D
Megane (JM) Scenic	07.03-08.09	15-19	6x15	42	Image Brio	40	45	10	1304,-		B
1.9dCi, 2.0i 16"			6x15	45	Image Ride	38	45	14	1552,-		
2.0 Turbo 16"			6x16	37	Image Comet	40	45	10	1536,-	**OE-fit**	B,D
Megane (M)	10.02-10.08	15-20	6x16	38	Image Comet Slv	40	45	10	1536,-	**OE-fit**	B,D
Megane (M) 2.0 2.0T	10.02-10.08	16-20	6,5x16	19	ATS Streetrallye Slv	40	45	10	2240,-		
Modus (P)	09.04-12.12	15-18	6,5x16	34	CSP 16	40	45	10	1468,-		D
Twingo (N) RS	10.09-06.14	16-17	6,5x16	42	Image Brio	38	45	14	1524,-		B
			7x17	18	ATS Streetrallye Blk	45	45	0	3344,-		
			7x17	42	Image Brio	40	45	10	1832,-		B
			7,5x18	18	ATS Streetrallye Blk	38	45	14	4180,-		M
RENAULT				PCD: **4-100**	Bolt - Mutter: **12x1,50B**	CB: **60,1**					
Captur (R)	05.13-10.19	15-20	6x15	19	ATS Streetrallye Slv	38	40	4	1960,-		
1.2, 1.5dCi 16"			6x15	34	CSP 16	40	40	0	1228,-	**OE-fit**	B,D
Clio (R)	10.12-08.19	15-19	6x15	35	CSP 16 M.Gun	40	40	0	1228,-	**OE-fit**	B,D
Clio (R) grandtour	02.13-08.19	15-19	6x15	37	Image Comet	40	40	0	1316,-	**OE-fit**	B,D
Zoe (AG)	02.14-08.19	15-18	6x15	38	Image Comet Slv	40	40	0	1316,-	**OE-fit**	B,D
			6x15	42	Image Brio	40	40	0	1304,-		B
			6x15	45	Image Ride	38	40	4	1552,-		
			6x16	37	Image Comet	40	40	0	1536,-	**OE-fit**	B,D
			6x16	38	Image Comet Slv	40	40	0	1536,-	**OE-fit**	B,D
			6,5x16	19	ATS Streetrallye Slv	40	40	0	2240,-		
			6,5x16	34	CSP 16	40	40	0	1468,-	**OE-fit**	B,D

Forts. neste side »

Bilmerke - Bilmodell	Årsmodell	Dimensjon	Felgdim.	Bilde	Felgmodell	ET Felg	ET Bil	Avvik ET	Veil. Pris eks. MVA	Merknader	B,C D, M
RENAULT (forts.)				PCD: **4-100** Bolt - Mutter: **12x1,50B** CB: **60,1**							
			6,5x16	42	Image Brio	38	40	4	1524,-		B
			7x17	18	ATS Streetrallye Blk	45	40	-10	3344,-		
			7x17	42	Image Brio	40	40	0	1832,-		B
			7,5x18	18	ATS Streetrallye Blk	38	40	4	4180,-		M
RENAULT				PCD: **4-100** Bolt - Mutter: **12x1,50B** CB: **60,1**							
Clio (RJA)	09.19-	15-19	6x15	19	ATS Streetrallye Slv	38	37	-2	1960,-		
			6x15	34	CSP 16	40	37	-6	1228,-	**OE-fit**	B,D
			6x15	35	CSP 16 M.Gun	40	37	-6	1228,-	**OE-fit**	B,D
			6x15	37	Image Comet	31	37	12	1316,-	**OE-fit**	B,D
			6x15	42	Image Brio	40	37	-6	1304,-		B
			6x16	37	Image Comet	37	37	0	1536,-	**OE-fit**	B,D
			6,5x16	42	Image Brio	38	37	-2	1524,-		B
			7,5x18	18	ATS Streetrallye Blk	38	37	-2	4180,-		
RENAULT				PCD: **5-114,3** Bolt - Mutter: **12x1,50B** CB: **66,1**							
Zoe (AG)	09.19-	15-18	6x15	34	CSP 16	40	44	8	1228,-	**OE-fit**	B,D
			6x15	35	CSP 16 M.Gun	40	44	8	1228,-	**OE-fit**	B,D
			6,5x16	34	CSP 16	40	44	8	1468,-	**OE-fit**	B,D
			6,5x16	46	Image Stella	40	44	8	1548,-	**OE-fit**	B,D
			6,5x16	47	Image Stella M.Blk	40	44	8	1548,-	**OE-fit**	B,D
			6,5x16	48	Image Motion	40	44	8	1468,-	**OE-fit**	B,D
			6,5x16	49	Image Motion G.Gun	40	44	8	1468,-	**OE-fit**	B,D
			6,5x16	50	Image Legend	40	44	8	1544,-	**OE-fit**	B,D
			7x16	17	BM Drive M.Gun	40	44	8	1476,-	**OE-fit**	B,D
			7x17	17	BM Drive M.Gun	40	44	8	1736,-	**OE-fit**	B,D
			7x17	34	CSP 16	40	44	8	1836,-	**OE-fit**	B,D
			7x17	35	CSP 16 M.Gun	40	44	8	1836,-	**OE-fit**	B,D
			7x17	40	Image Spirit	40	44	8	1476,-	**OE-fit**	B,D
			7x17	46	Image Stella	40	44	8	1812,-	**OE-fit**	B,D
			7x17	47	Image Stella M.Blk	40	44	8	1812,-	**OE-fit**	B,D
			7x17	48	Image Motion	40	44	8	1736,-	**OE-fit**	B,D
			7x17	49	Image Motion G.Gun	40	44	8	1736,-	**OE-fit**	B,D
			7,5x17	50	Image Legend	40	44	8	1812,-	**OE-fit**	B,D
			7,5x18	2	Nitro Sapphire FF	45	44	-2	3944,-		B
			7,5x18	34	CSP 16	40	44	8	2444,-	**OE-fit**	B,D
			7,5x18	35	CSP 16 M.Gun	40	44	8	2444,-	**OE-fit**	B,D
			7,5x18	46	Image Stella	40	44	8	2276,-	**OE-fit**	B,D
			7,5x18	47	Image Stella M.Blk	40	44	8	2276,-	**OE-fit**	B,D
RENAULT				PCD: **5-108** Bolt - Mutter: **12x1,50B** CB: **60,1**							
Laguna	03.01-09.07	15-19	6x15	48	Image Motion	40	50	20	1224,-		B
1.9dCi (88kW), 2.0i 16"			6x15	49	Image Motion G.Gun	40	50	20	1224,-		B
2.2dCi, 3.0 V6 16"			6,5x16	36	Image Colt	40	50	20	1624,-		
Megane (JM) Scenic	07.05-08.09	16-20	6,5x16	92	Image Colt L.Gun	40	50	20	1548,-		
2.0dCi (110kW)			7x16	40	Image Spirit	40	50	20	1264,-		
Megane (M) 2.0dCi (110kW)	07.05-10.08	16-20	7x16	46	Image Stella	40	50	20	1548,-		
			7x16	47	Image Stella M.Blk	40	50	20	1548,-		
			7x16	48	Image Motion	40	50	20	1468,-		B
			7x16	49	Image Motion G.Gun	40	50	20	1468,-		B
			7x16	50	Image Legend	40	50	20	1544,-		
			7x17	40	Image Spirit	42	50	16	1476,-		
			7x17	46	Image Stella	42	50	16	1812,-		B
			7x17	47	Image Stella M.Blk	42	50	16	1812,-		B
			7,5x17	9	Nitro Sabre G.Blk	45	50	10	3052,-		
			7,5x17	36	Image Colt	40	50	20	1956,-		
			7,5x17	46	Image Stella	42	50	16	1812,-		
			7,5x17	47	Image Stella M.Blk	42	50	16	1812,-		B
			7,5x17	50	Image Legend	40	50	20	1812,-		
			7,5x17	92	Image Colt L.Gun	40	50	20	1876,-		
			8x17	17	BM Drive M.Gun	45	50	10	1736,-		
			8x17	48	Image Motion	42	50	16	1736,-		B
			8x17	49	Image Motion G.Gun	42	50	16	1736,-		B
			8x18	7	Nitro Spark G.Blk/Grey	45	50	10	3476,-		
			8x18	8	Nitro Spark G.Blk/Red	45	50	10	3476,-		
			8x18	9	Nitro Sabre G.Blk	47	50	6	3496,-		
			8x18	16	Advanti Inizio DST	42	50	16	3828,-		
			8x18	17	BM Drive M.Gun	45	50	10	2296,-		
			8x18	36	Image Colt	42	50	16	2412,-		
			8x18	48	Image Motion	42	50	16	2204,-		B
			8x18	49	Image Motion G.Gun	42	50	16	2204,-		B
			8x18	92	Image Colt L.Gun	42	50	16	2296,-		
			8x19	16	Advanti Inizio DST	42	50	16	4412,-		
			8x19	48	Image Motion	42	50	16	2532,-		B
			8x19	49	Image Motion G.Gun	42	50	16	2532,-		B
RENAULT				PCD: **5-108** Bolt - Mutter: **14x1,50B** CB: **60,1**							
Clio (R) Sport	03.06-03.13	17-19	7,5x17	46	Image Stella	50	68	36	1812,-		
(145kW)			7,5x17	47	Image Stella M.Blk	50	68	36	1812,-		
			7,5x18	46	Image Stella	50	68	36	2276,-		
			7,5x18	47	Image Stella M.Blk	50	68	36	2276,-		
			8x19	3	Nitro Turismo FF	50	68	36	4492,-		
			8x19	4	Nitro Turismo FF G.Gun/Pol	50	68	36	4644,-		
RENAULT				PCD: **5-114,3** Bolt - Mutter: **12x1,50B** CB: **66,1**							
Clio (R) Sport	04.13-	17-19	7,5x17	9	Nitro Sabre G.Blk	45	55	20	3052,-		B
			8x18	9	Nitro Sabre G.Blk	45	55	20	3496,-		B

Bilmerke - Bilmodell	Årsmodell	Dimensjon	Felgdim.	Bilde	Felgmodell	ET Felg	ET Bil	Avvik ET	Veil. Pris eks. MVA	Merknader	B,C D, M
RENAULT			PCD: **5-108** Bolt - Mutter: **14x1,50B**			CB: **60,1**					
Megane (M) Sport	06-01.09	17-20	7,5x17	46	Image Stella	50	53	5	1812,-		
(165kW)			7,5x17	47	Image Stella M.Blk	50	53	5	1812,-		
			7,5x18	46	Image Stella	50	53	5	2276,-		
			7,5x18	47	Image Stella M.Blk	50	53	5	2276,-		
			8x19	3	Nitro Turismo FF	50	53	5	4492,-		
			8x19	4	Nitro Turismo FF G.Gun/Pol	50	53	5	4644,-		
			8x20	3	Nitro Turismo FF	45	53	15	4812,-		
			8x20	4	Nitro Turismo FF G.Gun/Pol	45	53	15	4964,-		
RENAULT			PCD: **5-114,3** Bolt - Mutter: **12x1,50B**			CB: **66,1**					
Fluence (Z)	04.10-10.12	15-20	6x15	34	CSP 16	45	47	4	1228,-	**OE-fit**	B,D
Z.E. 16"			6,5x16	34	CSP 16	47	47	0	1468,-	**OE-fit**	B,D
Grand Scenic (JZ)	09.09-08.16	16-20	6,5x16	36	Image Colt	45	47	4	1624,-		B
2.0dCi 17"			6,5x16	40	Image Spirit	40	47	14	1264,-	**OE-fit**	B,D
Megane (Z)	11.08-12.15	15-20	6,5x16	46	Image Stella	40	47	14	1548,-	**OE-fit**	B,D
1.6dCi, 1.9dCi 16"			6,5x16	47	Image Stella M.Blk	40	47	14	1548,-	**OE-fit**	B,D
2.0TCe 17"			6,5x16	48	Image Motion	40	47	14	1468,-	**OE-fit**	B,D
Megane (Z) cab	02.09-12.15	16-20	6,5x16	49	Image Motion G.Gun	40	47	14	1468,-	**OE-fit**	B,D
2.0TCe 17"			6,5x16	50	Image Legend	40	47	14	1544,-	**OE-fit**	B,D
Megane (Z) coupe	02.09-12.15	16-20	6,5x16	92	Image Colt L.Gun	45	47	4	1548,-		B
2.0TCe 17"			7x16	17	BM Drive M.Gun	40	47	14	1476,-		D
Scenic (JZ)	09.09-07.16	15-20	7x17	17	BM Drive M.Gun	40	47	14	1736,-		D
1.4TCe, 1.5dCi, 1.6dCi 16"			7x17	34	CSP 16	40	47	14	1836,-	**OE-fit**	B,D
1.9dCi 16", 2.0dCi 17"			7x17	35	CSP 16 M.Gun	40	47	14	1836,-	**OE-fit**	B,D
Scenic (JZ) xmod	09.13-07.16	16-20	7x17	40	Image Spirit	40	47	14	1476,-	**OE-fit**	B,D
			7x17	46	Image Stella	40	47	14	1812,-	**OE-fit**	B,D
			7x17	47	Image Stella M.Blk	40	47	14	1812,-	**OE-fit**	B,D
			7x17	48	Image Motion	40	47	14	1736,-	**OE-fit**	B,D
			7x17	49	Image Motion G.Gun	40	47	14	1736,-	**OE-fit**	B,D
			7,5x17	9	Nitro Sabre G.Blk	45	47	4	3052,-		B
			7,5x17	36	Image Colt	45	47	4	1956,-		B
			7,5x17	50	Image Legend	40	47	14	1812,-	**OE-fit**	B,D
			7,5x17	92	Image Colt L.Gun	45	47	4	1876,-		B
			7,5x18	2	Nitro Sapphire FF	45	47	4	3944,-		B
			7,5x18	34	CSP 16	40	47	14	2444,-	**OE-fit**	B,D
			7,5x18	35	CSP 16 M.Gun	40	47	14	2444,-	**OE-fit**	B,D
			7,5x18	46	Image Stella	40	47	14	2276,-	**OE-fit**	B,D
			7,5x18	47	Image Stella M.Blk	40	47	14	2276,-	**OE-fit**	B,D
			8x18	7	Nitro Spark G.Blk/Grey	45	47	4	3476,-		B
			8x18	8	Nitro Spark G.Blk/Red	45	47	4	3476,-		B
			8x18	9	Nitro Sabre G.Blk	45	47	4	3496,-		B
			8x18	11	Nitro Demon	48	47	-2	2784,-		
			8x18	16	Advanti Inizio DST	45	47	4	3828,-		B
			8x18	36	Image Colt	45	47	4	2412,-		B
			8x18	92	Image Colt L.Gun	45	47	4	2296,-		B
			7,5x19	2	Nitro Sapphire FF	45	47	4	4572,-		B
			8x19	16	Advanti Inizio DST	45	47	4	4412,-		B
			8,5x19	5	Nitro Volcano G.Gun	45	47	4	4388,-		B,M
			8,5x19	6	Nitro Volcano	45	47	4	4632,-		B,M
			8,5x19	9	Nitro Sabre G.Blk	45	47	4	4292,-		B,M
			8,5x19	36	Image Colt	45	47	4	3028,-		B,M
			8,5x19	92	Image Colt L.Gun	45	47	4	2876,-		B,M
			8x20	2	Nitro Sapphire FF	45	47	4	5096,-		B
			8,5x20	5	Nitro Volcano G.Gun	45	47	4	4824,-		B,M
			8,5x20	6	Nitro Volcano	45	47	4	5164,-		B,M
			8,5x20	7	Nitro Spark G.Blk/Grey	45	47	4	4660,-		B
			8,5x20	8	Nitro Spark G.Blk/Red	45	47	4	4660,-		B
			8,5x20	9	Nitro Sabre G.Blk	45	47	4	4800,-		B,M
			8,5x20	36	Image Colt	45	47	4	3432,-		B,M
			8,5x20	92	Image Colt L.Gun	45	47	4	3276,-		B,M
RENAULT			PCD: **5-114,3** Bolt - Mutter: **12x1,50B**			CB: **66,1**					
Megane (Z) RS	03.10-01.16	17-20	8x18	9	Nitro Sabre G.Blk	45	65	40	3496,-		B
(184kW)											
RENAULT			PCD: **5-114,3** Bolt - Mutter: **12x1,50B**			CB: **66,1**					
Megane (RFB)	01.16-	15-20	6,5x16	34	CSP 16	40	41	2	1468,-	**OE-fit**	B,D
GT (151kW) 17"			6,5x16	36	Image Colt	35	41	12	1624,-		B
Talisman (RFD)	12.15-	16-20	6,5x16	40	Image Spirit	40	41	2	1264,-	**OE-fit**	B,D
1.6dCi (118kW) 17"			6,5x16	46	Image Stella	40	41	2	1548,-	**OE-fit**	B,D
1.6Turbo (110/147kW) 17"			6,5x16	47	Image Stella M.Blk	40	41	2	1548,-	**OE-fit**	B,D
			6,5x16	48	Image Motion	40	41	2	1468,-	**OE-fit**	B,D
			6,5x16	49	Image Motion G.Gun	40	41	2	1468,-	**OE-fit**	B,D
			6,5x16	50	Image Legend	40	41	2	1544,-	**OE-fit**	B,D
			6,5x16	92	Image Colt L.Gun	35	41	12	1548,-		B
			7x16	17	BM Drive M.Gun	40	41	2	1476,-		D
			7x17	17	BM Drive M.Gun	40	41	2	1736,-		D
			7x17	34	CSP 16	40	41	2	1836,-	**OE-fit**	B,D
			7x17	35	CSP 16 M.Gun	40	41	2	1836,-	**OE-fit**	B,D
			7x17	40	Image Spirit	40	41	2	1476,-	**OE-fit**	B,D
			7x17	46	Image Stella	40	41	2	1812,-	**OE-fit**	B,D
			7x17	47	Image Stella M.Blk	40	41	2	1812,-	**OE-fit**	B,D
			7x17	48	Image Motion	40	41	2	1736,-	**OE-fit**	B,D
			7x17	49	Image Motion G.Gun	40	41	2	1736,-	**OE-fit**	B,D
			7,5x17	9	Nitro Sabre G.Blk	45	41	-8	3052,-		B
			7,5x17	36	Image Colt	45	41	-8	1956,-		B
			7,5x17	50	Image Legend	40	41	2	1812,-	**OE-fit**	B,D
			7,5x17	92	Image Colt L.Gun	45	41	-8	1876,-		B

Forts. neste side »

Bilmerke - Bilmodell	Årsmodell	Dimensjon	Felgdim.	Bilde	Felgmodell	ET Felg	ET Bil	Avvik ET	Veil. Pris eks. MVA	Merknader	B,C D, M
RENAULT (forts.)				PCD: **5-114,3** Bolt - Mutter: **12x1,50B**		CB: **66,1**					
			7,5x18	34	CSP 16	40	41	2	2444,-	**OE-fit**	B,D
			7,5x18	35	CSP 16 M.Gun	40	41	2	2444,-	**OE-fit**	B,D
			7,5x18	46	Image Stella	40	41	2	2276,-	**OE-fit**	B,D
			7,5x18	47	Image Stella M.Blk	40	41	2	2276,-	**OE-fit**	B,D
			8x18	7	Nitro Spark G.Blk/Grey	45	41	-8	3476,-		B
			8x18	8	Nitro Spark G.Blk/Red	45	41	-8	3476,-		B
			8x18	9	Nitro Sabre G.Blk	45	41	-8	3496,-		B
			8x18	16	Advanti Inizio DST	45	41	-8	3828,-		B
			8x18	36	Image Colt	45	41	-8	2412,-		B
			8x18	92	Image Colt L.Gun	45	41	-8	2296,-		B
			8x19	16	Advanti Inizio DST	45	41	-8	4412,-		B
			8,5x19	5	Nitro Volcano G.Gun	35	41	12	4388,-		B,M
			8,5x19	6	Nitro Volcano	35	41	12	4632,-		B,M
			8,5x19	36	Image Colt	45	41	-8	3028,-		B,M
			8,5x19	92	Image Colt L.Gun	45	41	-8	2876,-		B,M
			8,5x20	5	Nitro Volcano G.Gun	35	41	12	4824,-		B,M
			8,5x20	6	Nitro Volcano	35	41	12	5164,-		B,M
			8,5x20	7	Nitro Spark G.Blk/Grey	45	41	-8	4660,-		B,M
			8,5x20	8	Nitro Spark G.Blk/Red	45	41	-8	4660,-		B,M
			8,5x20	36	Image Colt	45	41	-8	3432,-		B,M
			8,5x20	92	Image Colt L.Gun	45	41	-8	3276,-		B,M
RENAULT				PCD: **5-114,3** Bolt - Mutter: **12x1,50B**		CB: **66,1**					
Megane (RFB) RS	01.16-	18-20	8x18	16	Advanti Inizio DST	45	48	6	3828,-		B
			8x19	16	Advanti Inizio DST	45	48	6	4412,-		B
			8,5x19	9	Nitro Sabre G.Blk	45	48	6	4292,-		B
			8,5x20	9	Nitro Sabre G.Blk	45	48	6	4800,-		B
RENAULT				PCD: **5-114,3** Bolt - Mutter: **14x1,50B**		CB: **66,1**					
Laguna (T)	10.07-11.15	16-20	6,5x16	34	CSP 16	40	47	14	1468,-	**OE-fit**	B,D
2.0dCi, 2.0 Turbo 17"			6,5x16	36	Image Colt	35	47	24	1624,-		
3.0dCi 17"			6,5x16	40	Image Spirit	40	47	14	1264,-	**OE-fit**	B,D
Laguna (T) coupe	01.09-11.15	17-20	6,5x16	46	Image Stella	40	47	14	1548,-	**OE-fit**	B,D
			6,5x16	47	Image Stella M.Blk	40	47	14	1548,-	**OE-fit**	B,D
			6,5x16	48	Image Motion	40	47	14	1468,-	**OE-fit**	B,D
			6,5x16	49	Image Motion G.Gun	40	47	14	1468,-	**OE-fit**	B,D
			6,5x16	50	Image Legend	40	47	14	1544,-	**OE-fit**	B,D
			6,5x16	92	Image Colt L.Gun	35	47	24	1548,-		
			7x16	17	BM Drive M.Gun	40	47	14	1476,-		D
			7x17	17	BM Drive M.Gun	40	47	14	1736,-		D
			7x17	40	Image Spirit	40	47	14	1476,-	**OE-fit**	B,D
			7x17	46	Image Stella	40	47	14	1812,-	**OE-fit**	B,D
			7x17	47	Image Stella M.Blk	40	47	14	1812,-	**OE-fit**	B,D
			7x17	48	Image Motion	40	47	14	1736,-	**OE-fit**	B,D
			7x17	49	Image Motion G.Gun	40	47	14	1736,-	**OE-fit**	B,D
			7,5x17	36	Image Colt	45	47	4	1956,-		
			7,5x17	50	Image Legend	40	47	14	1812,-	**OE-fit**	B,D
			7,5x17	92	Image Colt L.Gun	45	47	4	1876,-		
			7,5x18	2	Nitro Sapphire FF	45	47	4	3944,-		
			7,5x18	34	CSP 16	40	47	14	2444,-	**OE-fit**	B,D
			7,5x18	46	Image Stella	40	47	14	2276,-		D
			7,5x18	47	Image Stella M.Blk	40	47	14	2276,-		D
			8x18	7	Nitro Spark G.Blk/Grey	35	47	24	3476,-		B
			8x18	8	Nitro Spark G.Blk/Red	35	47	24	3476,-		
			7,5x19	2	Nitro Sapphire FF	45	47	4	4572,-		
			8x19	11	Nitro Demon	38	47	18	3376,-		
			8,5x19	5	Nitro Volcano G.Gun	45	47	4	4388,-		B
			8,5x19	6	Nitro Volcano	45	47	4	4632,-		B
			8x20	2	Nitro Sapphire FF	45	47	4	5096,-		
			8,5x20	5	Nitro Volcano G.Gun	45	47	4	4824,-		B
			8,5x20	6	Nitro Volcano	45	47	4	5164,-		B
			8,5x20	7	Nitro Spark G.Blk/Grey	35	47	24	4660,-		
			8,5x20	8	Nitro Spark G.Blk/Red	35	47	24	4660,-		
			8,5x20	11	Nitro Demon	38	47	18	3808,-		
RENAULT				PCD: **5-108** Bolt - Mutter: **14x1,50B**		CB: **60,1**					
Avantime	09.01-09.03	16-19	6x15	17	BM Drive M.Gun	40	50	20	1276,-		
Espace	01.97-09.02	15-18	6x15	48	Image Motion	40	50	20	1224,-		B
Espace	10.02-03.15	16-20	6x15	49	Image Motion G.Gun	40	50	20	1224,-		B
2.0dCi, 2.0 Turbo 17"			6,5x16	36	Image Colt	40	50	20	1624,-		
2.2dCi, 3.0dCi, 3.5 V6 17"			6,5x16	92	Image Colt L.Gun	40	50	20	1548,-		
Grand Espace	05.06-03.15	16-20	7x16	17	BM Drive M.Gun	40	50	20	1476,-		
2.0dCi, 2.0 Turbo 17"			7x16	46	Image Stella	40	50	20	1548,-		
2.2dCi, 3.0dCi, 3.5 V6 17"			7x16	47	Image Stella M.Blk	40	50	20	1548,-		
Laguna 5-bult	03.94-02.01	15-18	7x16	48	Image Motion	40	50	20	1468,-		B
Megane RX4	06.00-06.03	16-18	7x16	49	Image Motion G.Gun	40	50	20	1468,-		B
Vel Satis	09.02-12.09	17-19	7x16	50	Image Legend	40	50	20	1544,-		
			7x17	40	Image Spirit	42	50	16	1476,-		
			7x17	46	Image Stella	42	50	16	1812,-		B
			7x17	47	Image Stella M.Blk	42	50	16	1812,-		B
			7,5x17	9	Nitro Sabre G.Blk	45	50	10	3052,-		
			7,5x17	36	Image Colt	40	50	20	1956,-		
			7,5x17	46	Image Stella	42	50	16	1812,-		
			7,5x17	47	Image Stella M.Blk	42	50	16	1812,-		B
			7,5x17	50	Image Legend	40	50	20	1812,-		
			7,5x17	92	Image Colt L.Gun	40	50	20	1876,-		
			8x17	17	BM Drive M.Gun	45	50	10	1736,-		
			8x17	48	Image Motion	42	50	16	1736,-		B

Forts. neste side »

Bilmerke - Bilmodell	Årsmodell	Dimensjon	Felgdim.	Bilde	Felgmodell	ET Felg	ET Bil	Avvik ET	Veil. Pris eks. MVA	Merknader	B,C D, M
RENAULT (forts.)			PCD: **5-108** Bolt - Mutter: **14x1,50B** CB: **60,1**								
			8x17	49	Image Motion G.Gun	42	50	16	1736,-		B
			7,5x18	46	Image Stella	50	50	0	2276,-		
			7,5x18	47	Image Stella M.Blk	50	50	0	2276,-		
			8x18	7	Nitro Spark G.Blk/Grey	45	50	10	3476,-		
			8x18	8	Nitro Spark G.Blk/Red	45	50	10	3476,-		
			8x18	9	Nitro Sabre G.Blk	47	50	6	3496,-		
			8x18	16	Advanti Inizio DST	42	50	16	3828,-		
			8x18	17	BM Drive M.Gun	45	50	10	2296,-		
			8x18	36	Image Colt	42	50	16	2412,-		
			8x18	48	Image Motion	42	50	16	2204,-		B
			8x18	49	Image Motion G.Gun	42	50	16	2204,-		B
			8x18	92	Image Colt L.Gun	42	50	16	2296,-		
			8x19	3	Nitro Turismo FF	42	50	16	4492,-		
			8x19	4	Nitro Turismo FF G.Gun/Pol	42	50	16	4644,-		
			8x19	16	Advanti Inizio DST	42	50	16	4412,-		
			8x19	48	Image Motion	42	50	16	2532,-		B
			8x19	49	Image Motion G.Gun	42	50	16	2532,-		B
			8,5x20	7	Nitro Spark G.Blk/Grey	45	50	10	4660,-		
			8,5x20	8	Nitro Spark G.Blk/Red	45	50	10	4660,-		
RENAULT			PCD: **5-114,3** Bolt - Mutter: **12x1,50B** CB: **66,1**								
Captur (RJB)	11.19-	16-20	6,5x16	36	Image Colt	35	35	0	1624,-		B
			6,5x16	46	Image Stella	32	35	6	1548,-	**OE-fit**	B,D
			6,5x16	47	Image Stella M.Blk	32	35	6	1548,-	**OE-fit**	B,D
			6,5x16	92	Image Colt L.Gun	35	35	0	1548,-		B
			7x17	46	Image Stella	35	35	0	1812,-	**OE-fit**	B,D
			7x17	47	Image Stella M.Blk	35	35	0	1812,-	**OE-fit**	B,D
			7,5x17	9	Nitro Sabre G.Blk	35	35	0	3052,-		B
			7,5x17	36	Image Colt	35	35	0	1956,-		B
			7,5x17	92	Image Colt L.Gun	35	35	0	1876,-		B
			7,5x18	2	Nitro Sapphire FF	35	35	0	3944,-		B
			8x18	7	Nitro Spark G.Blk/Grey	35	35	0	3476,-		B
			8x18	8	Nitro Spark G.Blk/Red	35	35	0	3476,-		B
			8x18	16	Advanti Inizio DST	35	35	0	3828,-		B
			8x18	36	Image Colt	35	35	0	2412,-		B
			8x18	92	Image Colt L.Gun	35	35	0	2296,-		B
			7,5x19	2	Nitro Sapphire FF	35	35	0	4572,-		B
			8x19	16	Advanti Inizio DST	35	35	0	4412,-		B
			8x20	2	Nitro Sapphire FF	35	35	0	5096,-		B
RENAULT			PCD: **5-114,3** Bolt - Mutter: **12x1,25** CB: **66,1**								
Koleos (Y)	07.08-06.15	17-20	7x17	17	BM Drive M.Gun	40	40	0	1736,-		D
			7x17	34	CSP 16	40	40	0	1836,-	**OE-fit**	B,D
			7x17	35	CSP 16 M.Gun	40	40	0	1836,-	**OE-fit**	B,D
			7x17	40	Image Spirit	40	40	0	1476,-	**OE-fit**	B,D
			7x17	46	Image Stella	40	40	0	1812,-		D
			7x17	47	Image Stella M.Blk	40	40	0	1812,-		D
			7x17	48	Image Motion	40	40	0	1736,-	**OE-fit**	B,D
			7x17	49	Image Motion G.Gun	40	40	0	1736,-	**OE-fit**	B,D
			7,5x17	9	Nitro Sabre G.Blk	35	40	10	3052,-		
			7,5x17	36	Image Colt	35	40	10	1956,-		
			7,5x17	92	Image Colt L.Gun	35	40	10	1876,-		
			7,5x18	2	Nitro Sapphire FF	35	40	10	3944,-		
			7,5x18	34	CSP 16	40	40	0	2444,-	**OE-fit**	B,D
			7,5x18	35	CSP 16 M.Gun	40	40	0	2444,-	**OE-fit**	B,D
			7,5x18	46	Image Stella	40	40	0	2276,-		D
			7,5x18	47	Image Stella M.Blk	40	40	0	2276,-		D
			8x18	7	Nitro Spark G.Blk/Grey	35	40	10	3476,-		
			8x18	8	Nitro Spark G.Blk/Red	35	40	10	3476,-		
			8x18	9	Nitro Sabre G.Blk	35	40	10	3496,-		
			8x18	16	Advanti Inizio DST	35	40	10	3828,-		
			8x18	36	Image Colt	35	40	10	2412,-		
			8x18	92	Image Colt L.Gun	35	40	10	2296,-		
			7,5x19	2	Nitro Sapphire FF	35	40	10	4572,-		
			8x19	11	Nitro Demon	38	40	4	3376,-		
			8x19	16	Advanti Inizio DST	35	40	10	4412,-		
			8,5x19	5	Nitro Volcano G.Gun	35	40	10	4388,-		M
			8,5x19	6	Nitro Volcano	35	40	10	4632,-		M
			8,5x19	9	Nitro Sabre G.Blk	35	40	10	4292,-		
			8,5x19	36	Image Colt	35	40	10	3028,-		M
			8,5x19	92	Image Colt L.Gun	35	40	10	2876,-		M
			8x20	2	Nitro Sapphire FF	35	40	10	5096,-		
			8,5x20	5	Nitro Volcano G.Gun	35	40	10	4824,-		M
			8,5x20	6	Nitro Volcano	35	40	10	5164,-		M
			8,5x20	7	Nitro Spark G.Blk/Grey	35	40	10	4660,-		
			8,5x20	8	Nitro Spark G.Blk/Red	35	40	10	4660,-		
			8,5x20	9	Nitro Sabre G.Blk	35	40	10	4800,-		
			8,5x20	11	Nitro Demon	38	40	4	3808,-		
			8,5x20	36	Image Colt	35	40	10	3432,-		M
			8,5x20	92	Image Colt L.Gun	35	40	10	3276,-		M
RENAULT			PCD: **5-114,3** Bolt - Mutter: **12x1,50B** CB: **66,1**								
Kadjar (RFE)	07.15-	16-20	6,5x16	34	CSP 16	40	40	0	1468,-	**OE-fit**	B,D
			6,5x16	36	Image Colt	35	40	10	1624,-		B
			6,5x16	40	Image Spirit	40	40	0	1264,-	**OE-fit**	B,D
			6,5x16	46	Image Stella	40	40	0	1548,-	**OE-fit**	B,D
			6,5x16	47	Image Stella M.Blk	40	40	0	1548,-	**OE-fit**	B,D
			6,5x16	48	Image Motion	40	40	0	1468,-	**OE-fit**	B,D

Forts. neste side »

Bilmerke - Bilmodell	Årsmodell	Dimensjon	Felgdim.	Bilde	Felgmodell	ET Felg	ET Bil	Avvik ET	Veil. Pris eks. MVA	Merknader	B,C D, M
RENAULT (forts.)				PCD: **5-114,3** Bolt - Mutter: **12x1,50B**		CB: **66,1**					
			6,5x16	49	Image Motion G.Gun	40	40	0	1468,-	**OE-fit**	B,D
			6,5x16	50	Image Legend	40	40	0	1544,-	**OE-fit**	B,D
			6,5x16	92	Image Colt L.Gun	35	40	10	1548,-		B
			7x16	17	BM Drive M.Gun	40	40	0	1476,-		D
			7x17	17	BM Drive M.Gun	40	40	0	1736,-		D
			7x17	34	CSP 16	40	40	0	1836,-	**OE-fit**	B,D
			7x17	35	CSP 16 M.Gun	40	40	0	1836,-	**OE-fit**	B,D
			7x17	40	Image Spirit	40	40	0	1476,-	**OE-fit**	B,D
			7x17	46	Image Stella	40	40	0	1812,-	**OE-fit**	B,D
			7x17	47	Image Stella M.Blk	40	40	0	1812,-	**OE-fit**	B,D
			7x17	48	Image Motion	40	40	0	1736,-	**OE-fit**	B,D
			7x17	49	Image Motion G.Gun	40	40	0	1736,-	**OE-fit**	B,D
			7,5x17	9	Nitro Sabre G.Blk	35	40	10	3052,-		B
			7,5x17	36	Image Colt	35	40	10	1956,-		B
			7,5x17	50	Image Legend	40	40	0	1812,-	**OE-fit**	B,D
			7,5x17	92	Image Colt L.Gun	35	40	10	1876,-		B
			7,5x18	2	Nitro Sapphire FF	35	40	10	3944,-		B
			7,5x18	34	CSP 16	40	40	0	2444,-	**OE-fit**	B,D
			7,5x18	35	CSP 16 M.Gun	40	40	0	2444,-	**OE-fit**	B,D
			7,5x18	46	Image Stella	40	40	0	2276,-	**OE-fit**	B,D
			7,5x18	47	Image Stella M.Blk	40	40	0	2276,-	**OE-fit**	B,D
			8x18	7	Nitro Spark G.Blk/Grey	35	40	10	3476,-		B
			8x18	8	Nitro Spark G.Blk/Red	35	40	10	3476,-		B
			8x18	9	Nitro Sabre G.Blk	35	40	10	3496,-		B
			8x18	16	Advanti Inizio DST	35	40	10	3828,-		B
			8x18	36	Image Colt	35	40	10	2412,-		B
			8x18	92	Image Colt L.Gun	35	40	10	2296,-		B
			7,5x19	2	Nitro Sapphire FF	35	40	10	4572,-		B
			8x19	11	Nitro Demon	38	40	4	3376,-		
			8x19	16	Advanti Inizio DST	35	40	10	4412,-		B
			8,5x19	5	Nitro Volcano G.Gun	35	40	10	4388,-		B,M
			8,5x19	6	Nitro Volcano	35	40	10	4632,-		B,M
			8,5x19	9	Nitro Sabre G.Blk	35	40	10	4292,-		B,M
			8,5x19	36	Image Colt	35	40	10	3028,-		B,M
			8,5x19	92	Image Colt L.Gun	35	40	10	2876,-		B,M
			8x20	2	Nitro Sapphire FF	35	40	10	5096,-		B
			8,5x20	1	Nitro Throne FF	40	40	0	5060,-		B,M
			8,5x20	5	Nitro Volcano G.Gun	35	40	10	4824,-		B,M
			8,5x20	6	Nitro Volcano	35	40	10	5164,-		B,M
			8,5x20	7	Nitro Spark G.Blk/Grey	35	40	10	4660,-		B,M
			8,5x20	8	Nitro Spark G.Blk/Red	35	40	10	4660,-		B,M
			8,5x20	9	Nitro Sabre G.Blk	35	40	10	4800,-		B,M
			8,5x20	11	Nitro Demon	38	40	4	3808,-		M
			8,5x20	36	Image Colt	35	40	10	3432,-		B,M
			8,5x20	92	Image Colt L.Gun	35	40	10	3276,-		B,M
RENAULT				PCD: **5-114,3** Bolt - Mutter: **12x1,25**		CB: **66,1**					
Koleos (RZG)	04.17-	17-21	7x17	17	BM Drive M.Gun	40	40	0	1736,-		D
			7x17	34	CSP 16	40	40	0	1836,-	**OE-fit**	B,D
			7x17	35	CSP 16 M.Gun	40	40	0	1836,-	**OE-fit**	B,D
			7x17	40	Image Spirit	40	40	0	1476,-	**OE-fit**	B,D
			7x17	46	Image Stella	40	40	0	1812,-	**OE-fit**	B,D
			7x17	47	Image Stella M.Blk	40	40	0	1812,-	**OE-fit**	B,D
			7x17	48	Image Motion	40	40	0	1736,-	**OE-fit**	B,D
			7x17	49	Image Motion G.Gun	40	40	0	1736,-	**OE-fit**	B,D
			7,5x17	9	Nitro Sabre G.Blk	35	40	10	3052,-		
			7,5x17	36	Image Colt	35	40	10	1956,-		
			7,5x17	50	Image Legend	40	40	0	1812,-	**OE-fit**	B,D
			7,5x17	92	Image Colt L.Gun	35	40	10	1876,-		
			7,5x18	2	Nitro Sapphire FF	35	40	10	3944,-		
			7,5x18	34	CSP 16	40	40	0	2444,-	**OE-fit**	B,D
			7,5x18	35	CSP 16 M.Gun	40	40	0	2444,-	**OE-fit**	B,D
			7,5x18	46	Image Stella	40	40	0	2276,-		D
			7,5x18	47	Image Stella M.Blk	40	40	0	2276,-		D
			8x18	7	Nitro Spark G.Blk/Grey	35	40	10	3476,-		
			8x18	8	Nitro Spark G.Blk/Red	35	40	10	3476,-		
			8x18	9	Nitro Sabre G.Blk	35	40	10	3496,-		
			8x18	16	Advanti Inizio DST	35	40	10	3828,-		
			8x18	36	Image Colt	35	40	10	2412,-		
			8x18	92	Image Colt L.Gun	35	40	10	2296,-		
			7,5x19	2	Nitro Sapphire FF	35	40	10	4572,-		
			8x19	11	Nitro Demon	38	40	4	3376,-		
			8x19	16	Advanti Inizio DST	35	40	10	4412,-		
			8,5x19	5	Nitro Volcano G.Gun	35	40	10	4388,-		
			8,5x19	6	Nitro Volcano	35	40	10	4632,-		
			8,5x19	9	Nitro Sabre G.Blk	35	40	10	4292,-		
			8,5x19	36	Image Colt	35	40	10	3028,-		
			8,5x19	92	Image Colt L.Gun	35	40	10	2876,-		
			8x20	2	Nitro Sapphire FF	35	40	10	5096,-		
			8,5x20	1	Nitro Throne FF	40	40	0	5060,-		
			8,5x20	5	Nitro Volcano G.Gun	35	40	10	4824,-		
			8,5x20	6	Nitro Volcano	35	40	10	5164,-		
			8,5x20	7	Nitro Spark G.Blk/Grey	35	40	10	4660,-		
			8,5x20	8	Nitro Spark G.Blk/Red	35	40	10	4660,-		
			8,5x20	9	Nitro Sabre G.Blk	35	40	10	4800,-		
			8,5x20	11	Nitro Demon	38	40	4	3808,-		
			8,5x20	36	Image Colt	35	40	10	3432,-		

Forts. neste side »

Bilmerke - Bilmodell	Årsmodell	Dimensjon	Felgdim.	Bilde	Felgmodell	ET Felg	ET Bil	Avvik ET	Veil. Pris eks. MVA	Merknader	B,C D, M
RENAULT (forts.)			PCD: **5-114,3** Bolt - Mutter: **12x1,25** CB: **66,1**								
			8,5x20	92	Image Colt L.Gun	35	40	10	3276,-		
			9x21	5	Nitro Volcano G.Gun	35	40	10	5540,-		M
			9x21	6	Nitro Volcano	35	40	10	5996,-		M
RENAULT			PCD: **5-114,3** Bolt - Mutter: **14x1,50B** CB: **66,1**								
Espace (RFC)	04.15-	17-22	7x17	17	BM Drive M.Gun	40	37	-6	1736,-		D
			7x17	34	CSP 16	40	37	-6	1836,-	**OE-fit**	B,D
			7x17	35	CSP 16 M.Gun	40	37	-6	1836,-	**OE-fit**	B,D
			7x17	40	Image Spirit	40	37	-6	1476,-	**OE-fit**	B,D
			7x17	46	Image Stella	40	37	-6	1812,-	**OE-fit**	B,D
			7x17	47	Image Stella M.Blk	40	37	-6	1812,-	**OE-fit**	B,D
			7x17	48	Image Motion	40	37	-6	1736,-	**OE-fit**	B,D
			7x17	49	Image Motion G.Gun	40	37	-6	1736,-	**OE-fit**	B,D
			7,5x17	9	Nitro Sabre G.Blk	35	37	4	3052,-		B
			7,5x17	36	Image Colt	35	37	4	1956,-		B
			7,5x17	50	Image Legend	40	37	-6	1812,-	**OE-fit**	B,D
			7,5x17	92	Image Colt L.Gun	35	37	4	1876,-		B
			7,5x18	2	Nitro Sapphire FF	35	37	4	3944,-		B
			7,5x18	34	CSP 16	40	37	-6	2444,-	**OE-fit**	B,D
			7,5x18	35	CSP 16 M.Gun	40	37	-6	2444,-	**OE-fit**	B,D
			7,5x18	46	Image Stella	40	37	-6	2276,-	**OE-fit**	B,D
			7,5x18	47	Image Stella M.Blk	40	37	-6	2276,-	**OE-fit**	B,D
			8x18	7	Nitro Spark G.Blk/Grey	35	37	4	3476,-		B
			8x18	8	Nitro Spark G.Blk/Red	35	37	4	3476,-		B
			8x18	9	Nitro Sabre G.Blk	35	37	4	3496,-		B
			8x18	16	Advanti Inizio DST	35	37	4	3828,-		B
			8x18	36	Image Colt	35	37	4	2412,-		B
			8x18	92	Image Colt L.Gun	35	37	4	2296,-		B
			7,5x19	2	Nitro Sapphire FF	35	37	4	4572,-		B
			8x19	11	Nitro Demon	38	37	-2	3376,-		
			8x19	16	Advanti Inizio DST	35	37	4	4412,-		B
			8,5x19	5	Nitro Volcano G.Gun	35	37	4	4388,-		B,M
			8,5x19	6	Nitro Volcano	35	37	4	4632,-		B,M
			8,5x19	9	Nitro Sabre G.Blk	35	37	4	4292,-		B,M
			8,5x19	36	Image Colt	35	37	4	3028,-		B,M
			8,5x19	92	Image Colt L.Gun	35	37	4	2876,-		B,M
			8x20	2	Nitro Sapphire FF	35	37	4	5096,-		B
			8,5x20	1	Nitro Throne FF	40	37	-6	5060,-		B,M
			8,5x20	5	Nitro Volcano G.Gun	35	37	4	4824,-		B,M
			8,5x20	6	Nitro Volcano	35	37	4	5164,-		B,M
			8,5x20	7	Nitro Spark G.Blk/Grey	35	37	4	4660,-		B,M
			8,5x20	8	Nitro Spark G.Blk/Red	35	37	4	4660,-		B,M
			8,5x20	9	Nitro Sabre G.Blk	35	37	4	4800,-		B,M
			8,5x20	11	Nitro Demon	38	37	-2	3808,-		M
			8,5x20	36	Image Colt	35	37	4	3432,-		B,M
			8,5x20	92	Image Colt L.Gun	35	37	4	3276,-		B,M
RENAULT			PCD: **4-100** Bolt - Mutter: **12x1,50B** CB: **60,1**								
Kangoo (FW) 4-bult	01.08-	14-18	5,5x14	45	Image Ride	38	45	14	1392,-		
			6x15	19	ATS Streetrallye Slv	38	45	14	1960,-		
			6x15	34	CSP 16	40	45	10	1228,-	**OE-fit**	B,D
			6x15	35	CSP 16 M.Gun	40	45	10	1228,-	**OE-fit**	B,D
			6x15	37	Image Comet	40	45	10	1316,-	**OE-fit**	B,D
			6x15	38	Image Comet Slv	40	45	10	1316,-	**OE-fit**	B,D
			6x15	42	Image Brio	40	45	10	1304,-		B
			6x15	45	Image Ride	38	45	14	1552,-		
			6x16	37	Image Comet	40	45	10	1536,-	**OE-fit**	B,D
			6x16	38	Image Comet Slv	40	45	10	1536,-	**OE-fit**	B,D
			6,5x16	19	ATS Streetrallye Slv	40	45	10	2240,-		
			6,5x16	34	CSP 16	40	45	10	1468,-		D
			6,5x16	42	Image Brio	38	45	14	1524,-		B
			7x17	42	Image Brio	40	45	10	1832,-		B
RENAULT			PCD: **5-108** Bolt - Mutter: **12x1,50B** CB: **60,1**								
Kangoo (FW) 5-bult	01.08-	15-20	6x15	17	BM Drive M.Gun	40	44	8	1276,-		
4wd 16"			6x15	48	Image Motion	44	44	0	1224,-	**OE-fit**	B,D
			6x15	49	Image Motion G.Gun	40	44	8	1224,-		B
			6,5x16	36	Image Colt	40	44	8	1624,-		B
			6,5x16	92	Image Colt L.Gun	40	44	8	1548,-		B
			7x16	17	BM Drive M.Gun	40	44	8	1476,-		
			7x16	40	Image Spirit	40	44	8	1264,-		B
			7x16	46	Image Stella	40	44	8	1548,-		B
			7x16	47	Image Stella M.Blk	40	44	8	1548,-		B
			7x16	48	Image Motion	40	44	8	1468,-		B
			7x16	49	Image Motion G.Gun	40	44	8	1468,-		B
			7x16	50	Image Legend	40	44	8	1544,-		B
			7x17	40	Image Spirit	42	44	4	1476,-		B
			7x17	46	Image Stella	42	44	4	1812,-		B
			7x17	47	Image Stella M.Blk	42	44	4	1812,-		B
			7x17	48	Image Motion	40	44	8	1736,-		
			7x17	49	Image Motion G.Gun	40	44	8	1736,-		
			7,5x17	9	Nitro Sabre G.Blk	45	44	-2	3052,-		B
			7,5x17	36	Image Colt	40	44	8	1956,-		B
			7,5x17	46	Image Stella	42	44	4	1812,-		B
			7,5x17	47	Image Stella M.Blk	42	44	4	1812,-		B
			7,5x17	50	Image Legend	40	44	8	1812,-		B
			7,5x17	92	Image Colt L.Gun	40	44	8	1876,-		B
			8x17	9	Nitro Sabre G.Blk	42	44	4	3108,-		B

Forts. neste side »

Bilmerke - Bilmodell	Årsmodell	Dimensjon	Felgdim.	Bilde	Felgmodell	ET Felg	ET Bil	Avvik ET	Veil. Pris eks. MVA	Merknader	B,C D, M
RENAULT (forts.)				PCD: **5-108** Bolt - Mutter: **12x1,50B**		CB: **60,1**					
			8x17	17	BM Drive M.Gun	42	44	4	1736,-		
			8x17	48	Image Motion	42	44	4	1736,-		B
			8x17	49	Image Motion G.Gun	42	44	4	1736,-		B
			8x18	2	Nitro Sapphire FF	42	44	4	4036,-		B
			8x18	7	Nitro Spark G.Blk/Grey	45	44	-2	3476,-		B
			8x18	8	Nitro Spark G.Blk/Red	45	44	-2	3476,-		B
			8x18	9	Nitro Sabre G.Blk	42	44	4	3496,-		B
			8x18	10	Nitro Demon H.Slv	40	44	8	2972,-		
			8x18	11	Nitro Demon	40	44	8	2784,-		
			8x18	16	Advanti Inizio DST	42	44	4	3828,-		B
			8x18	17	BM Drive M.Gun	42	44	4	2296,-		
			8x18	36	Image Colt	42	44	4	2412,-		B
			8x18	46	Image Stella	42	44	4	2276,-		B
			8x18	47	Image Stella M.Blk	42	44	4	2276,-		B
			8x18	48	Image Motion	42	44	4	2204,-		B
			8x18	49	Image Motion G.Gun	42	44	4	2204,-		B
			8x18	92	Image Colt L.Gun	42	44	4	2296,-		B
			8x19	2	Nitro Sapphire FF	42	44	4	4684,-		B
			8x19	3	Nitro Turismo FF	42	44	4	4492,-		B
			8x19	4	Nitro Turismo FF G.Gun/Pol	42	44	4	4644,-		B
			8x19	10	Nitro Demon H.Slv	40	44	8	3624,-		
			8x19	11	Nitro Demon	40	44	8	3376,-		
			8x19	16	Advanti Inizio DST	42	44	4	4412,-		B
			8x19	48	Image Motion	42	44	4	2532,-		B
			8x19	49	Image Motion G.Gun	42	44	4	2532,-		B
			8x20	3	Nitro Turismo FF	45	44	-2	4812,-		B
			8x20	4	Nitro Turismo FF G.Gun/Pol	45	44	-2	4964,-		B
RENAULT				PCD: **5-114,3** Bolt - Mutter: **14x1,50B**		CB: **66,1**					
Trafic (L)	09.14-	16-20	6,5x16	54	Image Vector	50	50	0	1956,-	**OE-fit**	B,D
			6,5x16	55	Image Vector Slv	50	50	0	1956,-	**OE-fit**	B,D
			7x17	54	Image Vector	50	50	0	2576,-	**OE-fit**	B,D
			7x17	55	Image Vector Slv	50	50	0	2576,-	**OE-fit**	B,D
			8x18	53	Nitro Hammer	45	50	10	3256,-	**OE-fit**	B,D
			8,5x20	1	Nitro Throne FF	40	50	20	5060,-	Maks bel. 900 kg	B,M
			8,5x20	53	Nitro Hammer	45	50	10	4268,-	**OE-fit**	B,D
RENAULT				PCD: **5-130** Bolt - Mutter: **14x1,50B**		CB: **89,1**					
Master	08.00-03.10	16-18	6,5x16	58	Image Strong	62	66	8	2500,-		D
Master (MA) fwd	04.10-	16-18	6,5x16	59	Image Strong M.Gun	62	66	8	2500,-		D
2.8t, 3.3t, 3.5t			6,5x16	61	Image Solid	66	66	0	2552,-	Maks bel. 1400 kg	D
Master (MA) rwd	04.10-	16-18									
3.5t											
RENAULT				PCD: **6-114,3** Bolt - Mutter: **12x1,25**		CB: **66,1**					
Alaskan (DB4)	07.17-	16-22	7x16	68	BM Macho	40	45	10	2396,-		D
2.3dCi (140kW) 17"			7x16	69	BM Macho M.Blk	40	45	10	2396,-		D
			7,5x17	67	Image Rock	50	45	-10	2796,-	**OE-fit**	B,D
			7,5x17	68	BM Macho	40	45	10	2756,-		D
			7,5x17	69	BM Macho M.Blk	40	45	10	2756,-		D
			7,5x18	67	Image Rock	50	45	-10	3324,-	**OE-fit**	B,D
			8x18	68	BM Macho	45	45	0	3300,-		D
			8x18	69	BM Macho M.Blk	45	45	0	3300,-		D
			9x20	68	BM Macho	40	45	10	4288,-		D
			9x20	69	BM Macho M.Blk	40	45	10	4288,-		D
			9x20	72	Ballistic Dakota	43	45	4	4624,-		D
			9x22	72	Ballistic Dakota	43	45	4	5128,-		D
ROLLS ROYCE				PCD: **5-112** Bolt - Mutter: **14x1,25B**		CB: **66,5**					
Cullinan	10.18-	21-23	9x22	12	Nitro Edge M.Blk	25	35	20	4888,-		D
			10x22	12	Nitro Edge M.Blk	30	35	10	4888,-	Kun bak	D
ROVER				PCD: **4-100** Bolt - Mutter: **12x1,50**		CB: **56,1**					
200-Series	05.96-01.00	14-18	5,5x14	45	Image Ride	38	45	14	1392,-		
25	02.00-01.06	14-18	6x15	19	ATS Streetrallye Slv	38	45	14	1960,-		
400-Series	10.89-01.00	14-18	6x15	42	Image Brio	40	45	10	1304,-		
45	02.00-01.06	14-18	6x15	45	Image Ride	38	45	14	1552,-		
City Rover	04-06	14-18	6,5x16	34	CSP 16	40	45	10	1468,-		
Streetwise	04-06	15-18	6,5x16	42	Image Brio	38	45	14	1524,-		
			7x17	18	ATS Streetrallye Blk	45	45	0	3344,-		
			7x17	42	Image Brio	40	45	10	1832,-		
ROVER				PCD: **4-114,3** Bolt - Mutter: **12x1,50**		CB: **64,1**					
600-Series	09.93-03.99	15-18	6x15	37	Image Comet	40	50	20	1316,-		
800-Series	06.92-12.98	15-18	6x15	38	Image Comet Slv	40	50	20	1316,-		
			6x16	37	Image Comet	40	50	20	1536,-		
ROVER				PCD: **5-100** Bolt - Mutter: **14x1,50B**		CB: **56,1**					
75	04.99-01.06	15-19	6x15	48	Image Motion	40	50	20	1224,-		
75 kombi	01.01-01.06	15-19	7,5x17	36	Image Colt	43	50	14	1956,-		
			7,5x17	92	Image Colt L.Gun	43	50	14	1876,-		
SAAB				PCD: **5-110** Bolt - Mutter: **12x1,50B**		CB: **65,1**					
900	09.93-02.98	15-20	6x15	48	Image Motion	38	49	22	1224,-	**OE-fit**	B,D
9-3	03.98-08.02	15-20	6,5x16	36	Image Colt	40	49	18	1624,-	**OE-fit**	B,D
9-3 cab	03.98-08.02	15-19	6,5x16	48	Image Motion	40	49	18	1468,-	**OE-fit**	B,D
9-5 sedan	09.97-08.05	15-20	6,5x16	92	Image Colt L.Gun	40	49	18	1548,-	**OE-fit**	B,D
Aero 16"			7x16	17	BM Drive M.Gun	40	49	18	1476,-	Eksenterbolter	D
9-5 sedan	09.05-04.10	15-20	7x17	48	Image Motion	40	49	18	1736,-	**OE-fit**	B,D
2.3T (162kW), Aero 16"			7,5x17	36	Image Colt	40	49	18	1956,-	**OE-fit**	B,D
2.3T Biopower 16"			7,5x17	92	Image Colt L.Gun	40	49	18	1876,-	**OE-fit**	B,D
9-5 sportkombi	09.97-08.05	15-20	8x17	48	Image Motion	34	49	30	1736,-		D,M

Forts. neste side »

Bilmerke - Bilmodell	Årsmodell	Dimensjon	Felgdim.	Bilde	Felgmodell	ET Felg	ET Bil	Avvik ET	Veil. Pris eks. MVA	Merknader	B,C D, M
SAAB (forts.)			PCD: **5-110** Bolt - Mutter: **12x1,50B** CB: **65,1**								
Aero 16"			8x18	11	Nitro Demon	40	49	18	2784,-	Eksenterbolter	D
9-5 sportkombi	09.05-04.10	15-20	8x18	36	Image Colt	40	49	18	2412,-	**OE-fit**	B,D
2.3T (162kW), Aero 16"			8x18	48	Image Motion	34	49	30	2204,-		D,M
2.3T Biopower 16"			8x18	92	Image Colt L.Gun	40	49	18	2296,-	**OE-fit**	B,D
			8x19	11	Nitro Demon	40	49	18	3376,-	Eksenterbolter	D
SAAB			PCD: **5-110** Bolt - Mutter: **12x1,50B** CB: **65,1**								
9-3 cab	09.03-12.11	15-20	6x15	48	Image Motion	38	41	6	1224,-	**OE-fit**	B,D
2.0t Biopower, 2.0T 16"			6,5x16	36	Image Colt	40	41	2	1624,-	**OE-fit**	B,D
1.9TTiD, 2.8T Aero 16"			6,5x16	48	Image Motion	40	41	2	1468,-	**OE-fit**	B,D
9-3 sportkombi	09.05-12.11	15-20	6,5x16	92	Image Colt L.Gun	40	41	2	1548,-	**OE-fit**	B,D
2.0t Biopower, 2.0T 16"			7x16	17	BM Drive M.Gun	40	41	2	1476,-	Eksenterbolter	D
1.9TTiD, 2.8T Aero 16"			7x17	48	Image Motion	40	41	2	1736,-	**OE-fit**	B,D
9-3 sportsedan	09.02-12.11	15-20	7,5x17	36	Image Colt	40	41	2	1956,-	**OE-fit**	B,D
2.0t Biopower, 2.0T 16"			7,5x17	92	Image Colt L.Gun	40	41	2	1876,-	**OE-fit**	B,D
1.9TTiD, 2.8T Aero 16"			8x17	48	Image Motion	34	41	14	1736,-		D,M
9-3 Turbo X	02.08-12.11	17-20	8x18	11	Nitro Demon	40	41	2	2784,-	Eksenterbolter	D
9-3X -	08.09-12.11	16-20	8x18	36	Image Colt	40	41	2	2412,-	**OE-fit**	B,D
			8x18	48	Image Motion	34	41	14	2204,-		D,M
			8x18	92	Image Colt L.Gun	40	41	2	2296,-	**OE-fit**	B,D
			8x19	11	Nitro Demon	40	41	2	3376,-	Eksenterbolter	D
SAAB			PCD: **5-120** Bolt - Mutter: **14x1,50** CB: **67,1**								
9-5	05.10-12.11	16-20	7,5x17	26	CSP 18 G.Blk/pol	37	41	8	2272,-		
2.0T (162kw), 2.0TTiD (140kw) 17"			7,5x17	27	CSP 18	37	41	8	2200,-		
2.8T (220kw) 18"			7,5x17	28	CSP 18 G.Blk	37	41	8	2200,-		
			8x18	11	Nitro Demon	40	41	2	2784,-		
			8x19	4	Nitro Turismo FF G.Gun/Pol	40	41	2	4644,-		
			8x19	11	Nitro Demon	40	41	2	3376,-		
			8,5x20	11	Nitro Demon	40	41	2	3808,-		
SEAT			PCD: **4-100** Bolt - Mutter: **12x1,50B** CB: **57,1**								
Mii (AA)	09.11-	14-17	5x14	37	Image Comet	35	35	0	1264,-	**OE-fit**	B,D
			5,5x14	37	Image Comet	30	35	10	1264,-	**OE-fit**	B,D
			5,5x14	38	Image Comet Slv	30	35	10	1264,-	**OE-fit**	B,D
			6x15	19	ATS Streetrallye Slv	38	35	-6	1960,-		
			6x15	37	Image Comet	40	35	-10	1316,-	**OE-fit**	B,D
			6x15	38	Image Comet Slv	40	35	-10	1316,-	**OE-fit**	B,D
			6x15	42	Image Brio	40	35	-10	1304,-		
			6x15	45	Image Ride	38	35	-6	1552,-		
			6x16	37	Image Comet	40	35	-10	1536,-		
			6x16	38	Image Comet Slv	40	35	-10	1536,-		
			6,5x16	19	ATS Streetrallye Slv	40	35	-10	2240,-		
			6,5x16	34	CSP 16	40	35	-10	1468,-		
			6,5x16	42	Image Brio	38	35	-6	1524,-		
			7x17	42	Image Brio	40	35	-10	1832,-		
SEAT			PCD: **4-100** Bolt - Mutter: **12x1,50B** CB: **57,1**								
Arosa	06.97-03.05	13-15	5x13	45	Image Ride	38	45	14	1336,-		
Cordoba	07.93-03.02	13-17	5,5x14	37	Image Comet	30	45	30	1264,-		D
Ibiza	09.93-03.02	13-17	5,5x14	38	Image Comet Slv	30	45	30	1264,-		D
1.8i (95kW), 2.0i 14"			5,5x14	45	Image Ride	38	45	14	1392,-		
Inca	01.96-12.03	14-17	6x15	19	ATS Streetrallye Slv	38	45	14	1960,-		
Toledo	09.91-03.99	13-18	6x15	37	Image Comet	40	45	10	1316,-		D
			6x15	38	Image Comet Slv	40	45	10	1316,-		D
			6x15	42	Image Brio	40	45	10	1304,-		
			6x15	45	Image Ride	38	45	14	1552,-		
			6x16	37	Image Comet	40	45	10	1536,-		
			6x16	38	Image Comet Slv	40	45	10	1536,-		
			6,5x16	34	CSP 16	40	45	10	1468,-		
			6,5x16	42	Image Brio	38	45	14	1524,-		
			7x17	42	Image Brio	40	45	10	1832,-		
SEAT			PCD: **5-100** Bolt - Mutter: **14x1,50B** CB: **57,1**								
Cordoba (6L)	01.03-11.09	14-19	5,5x14	45	Image Ride	38	38	0	1392,-	**OE-fit**	B,D
1.9TDi (96kW) 15"			6x15	17	BM Drive M.Gun	38	38	0	1276,-		D
Ibiza (6J)	06.08-05.17	14-18	6x15	20	ATS Antares	38	38	0	1496,-	**OE-fit**	B,D
1.6TDI (77kW) 15"			6x15	21	ATS Antares G.Blk	38	38	0	1568,-	**OE-fit**	B,D
Cupra 15"			6x15	29	CSP 13	38	38	0	1468,-	**OE-fit**	B,D
Ibiza (6J) st	06.10-05.17	14-18	6x15	30	CSP 13 M.Gun	38	38	0	1468,-	**OE-fit**	B,D
1.6TDI (77kW) 15"			6x15	45	Image Ride	38	38	0	1552,-	**OE-fit**	B,D
Ibiza (6L)	04.02-05.08	14-18	6x15	48	Image Motion	38	38	0	1224,-	**OE-fit**	B,D
1.9TDi (96kW) 15"			6x15	49	Image Motion G.Gun	38	38	0	1224,-	**OE-fit**	B,D
FR 16", Cupra 17"			6,5x16	29	CSP 13	35	38	6	1716,-	**OE-fit**	B,D
Leon	12.99-08.05	14-20	6,5x16	30	CSP 13 M.Gun	35	38	6	1716,-	**OE-fit**	B,D
1.8i, 1.9TDI (81/110kW) 15"			6,5x16	36	Image Colt	40	38	-4	1624,-		
1.8T (132kW) 16"			6,5x16	48	Image Motion	38	38	0	1468,-	**OE-fit**	B,D
Toledo	04.99-11.04	14-20	6,5x16	49	Image Motion G.Gun	38	38	0	1468,-	**OE-fit**	B,D
1.8i, 1.8T 15"			6,5x16	92	Image Colt L.Gun	40	38	-4	1548,-		
1.9TDI (81/96/110kW) 15"			7x17	29	CSP 13	35	38	6	2152,-	**OE-fit**	B,D
			7x17	30	CSP 13 M.Gun	35	38	6	2152,-	**OE-fit**	B,D
			7,5x17	16	Advanti Inizio DST	42	38	-8	3324,-	**OE-fit**	B,D
			8x18	16	Advanti Inizio DST	42	38	-8	3828,-	**OE-fit**	B,D,M
			8x19	16	Advanti Inizio DST	42	38	-8	4412,-	**OE-fit**	B,D,M
SEAT			PCD: **5-100** Bolt - Mutter: **14x1,50B** CB: **57,1**								
Ibiza (KJ)	06.17-	14-19	5,5x14	45	Image Ride	38	40	4	1392,-	**OE-fit**	B,D
1.0TSI (70/85kW) 15"			6x15	17	BM Drive M.Gun	38	40	4	1276,-	**OE-fit**	B,D
1.0TDI, 1.5TSI 15"			6x15	20	ATS Antares	38	40	4	1496,-	**OE-fit**	B,D
			6x15	21	ATS Antares G.Blk	38	40	4	1568,-	**OE-fit**	B,D
			6x15	29	CSP 13	38	40	4	1468,-	**OE-fit**	B,D

Forts. neste side »

Bilmerke - Bilmodell	Årsmodell	Dimensjon	Felgdim.	Bilde	Felgmodell	ET Felg	ET Bil	Avvik ET	Veil. Pris eks. MVA	Merknader	B,C D, M
SEAT (forts.)				PCD: **5-100** Bolt - Mutter: **14x1,50B** CB: **57,1**							
			6x15	30	CSP 13 M.Gun	38	40	4	1468,-	**OE-fit**	B,D
			6x15	45	Image Ride	38	40	4	1552,-	**OE-fit**	B,D
			6x15	48	Image Motion	38	40	4	1224,-	**OE-fit**	B,D
			6x15	49	Image Motion G.Gun	38	40	4	1224,-	**OE-fit**	B,D
			6,5x16	29	CSP 13	45	40	-10	1716,-	**OE-fit**	B,D
			6,5x16	30	CSP 13 M.Gun	45	40	-10	1716,-	**OE-fit**	B,D
			6,5x16	36	Image Colt	40	40	0	1624,-		
			6,5x16	46	Image Stella	43	40	-6	1548,-	**OE-fit**	B,D
			6,5x16	47	Image Stella M.Blk	43	40	-6	1548,-	**OE-fit**	B,D
			6,5x16	48	Image Motion	38	40	4	1468,-	**OE-fit**	B,D
			6,5x16	49	Image Motion G.Gun	38	40	4	1468,-	**OE-fit**	B,D
			6,5x16	92	Image Colt L.Gun	40	40	0	1548,-		
			7x17	29	CSP 13	47	40	-14	2152,-	**OE-fit**	B,D
			7x17	30	CSP 13 M.Gun	47	40	-14	2152,-	**OE-fit**	B,D
			7x17	46	Image Stella	47	40	-14	1812,-	**OE-fit**	B,D
			7x17	47	Image Stella M.Blk	47	40	-14	1812,-	**OE-fit**	B,D
			7,5x17	16	Advanti Inizio DST	42	40	-4	3324,-	**OE-fit**	B,D
			7,5x17	36	Image Colt	43	40	-6	1956,-		
			7,5x17	92	Image Colt L.Gun	43	40	-6	1876,-		
			8x18	16	Advanti Inizio DST	42	40	-4	3828,-	**OE-fit**	B,D,M
			8x19	16	Advanti Inizio DST	42	40	-4	4412,-	**OE-fit**	B,D,M
SEAT				PCD: **5-100** Bolt - Mutter: **14x1,50B** CB: **57,1**							
Toledo (NH)	11.12-	14-18	5,5x14	45	Image Ride	38	46	16	1392,-	**OE-fit**	B,D
1.2TSI (77kW), 1.4TSI 15"			6x15	17	BM Drive M.Gun	38	46	16	1276,-		D
1.6TDI 15"			6x15	29	CSP 13	38	46	16	1468,-	**OE-fit**	B,D
			6x15	30	CSP 13 M.Gun	38	46	16	1468,-	**OE-fit**	B,D
			6x15	45	Image Ride	38	46	16	1552,-	**OE-fit**	B,D
			6x15	48	Image Motion	38	46	16	1224,-	**OE-fit**	B,D
			6x15	49	Image Motion G.Gun	38	46	16	1224,-	**OE-fit**	B,D
			6,5x16	29	CSP 13	45	46	2	1716,-	**OE-fit**	B,D
			6,5x16	30	CSP 13 M.Gun	45	46	2	1716,-	**OE-fit**	B,D
			6,5x16	36	Image Colt	40	46	12	1624,-		
			6,5x16	46	Image Stella	43	46	6	1548,-	**OE-fit**	B,D
			6,5x16	47	Image Stella M.Blk	43	46	6	1548,-	**OE-fit**	B,D
			6,5x16	92	Image Colt L.Gun	40	46	12	1548,-		
			7x17	29	CSP 13	47	46	-2	2152,-	**OE-fit**	B,D
			7x17	30	CSP 13 M.Gun	47	46	-2	2152,-	**OE-fit**	B,D
			7x17	46	Image Stella	47	46	-2	1812,-	**OE-fit**	B,D
			7x17	47	Image Stella M.Blk	47	46	-2	1812,-	**OE-fit**	B,D
			7,5x17	36	Image Colt	43	46	6	1956,-		
			7,5x17	92	Image Colt L.Gun	43	46	6	1876,-		
SEAT				PCD: **5-112** Bolt - Mutter: **14x1,50B** CB: **57,1**							
Altea (5P)	06.04-06.15	16-20	6x15	17	BM Drive M.Gun	43	50	14	1276,-		D
Altea (5P) Freetrack	09.07-06.15	16-20	6x15	20	ATS Antares	43	50	14	1496,-	**OE-fit**	B,D
2.0TDI (125kW), 2.0TFSI 17"			6x15	21	ATS Antares G.Blk	43	50	14	1568,-	**OE-fit**	B,D
Altea (5P) XL	12.06-06.15	16-20	6x15	29	CSP 13	43	50	14	1468,-	**OE-fit**	B,D
Leon	09.05-05.10	16-20	6x15	30	CSP 13 M.Gun	43	50	14	1468,-	**OE-fit**	B,D
Cupra 17"			6x15	45	Image Ride	43	50	14	1552,-	**OE-fit**	B,D
Cupra R 18"			6x15	48	Image Motion	43	50	14	1224,-	**OE-fit**	B,D
Leon (1P)	06.10-11.12	15-20	6x15	49	Image Motion G.Gun	43	50	14	1224,-	**OE-fit**	B,D
2.0TDI & 2.0TFSI 16"			6,5x16	20	ATS Antares	46	50	8	1852,-	**OE-fit**	B,D
Cupra 17", Cupra R 18"			6,5x16	21	ATS Antares G.Blk	46	50	8	1896,-	**OE-fit**	B,D
Leon (5F)	12.12-02.20	15-20	6,5x16	26	CSP 18 G.Blk/pol	46	50	8	1896,-		
1.8TSI, 2.0TDI (135kW) 16"			6,5x16	27	CSP 18	46	50	8	1760,-		
Leon (5F) st	12.13-02.20	15-20	6,5x16	28	CSP 18 G.Blk	46	50	8	1760,-		
1.8TSI, 2.0TDI (135kW) 16"			6,5x16	29	CSP 13	46	50	8	1716,-	**OE-fit**	B,D
Leon (5F) x-perience	10.14-	17-20	6,5x16	30	CSP 13 M.Gun	46	50	8	1716,-	**OE-fit**	B,D
Toledo (5P)	12.04-10.12	16-20	6,5x16	36	Image Colt	45	50	10	1624,-		B
			6,5x16	40	Image Spirit	46	50	8	1264,-	**OE-fit**	B,D
			6,5x16	46	Image Stella	46	50	8	1548,-	**OE-fit**	B,D
			6,5x16	47	Image Stella M.Blk	46	50	8	1548,-	**OE-fit**	B,D
			6,5x16	48	Image Motion	46	50	8	1468,-	**OE-fit**	B,D
			6,5x16	49	Image Motion G.Gun	46	50	8	1468,-	**OE-fit**	B,D
			6,5x16	50	Image Legend	46	50	8	1544,-	**OE-fit**	B,D
			6,5x16	92	Image Colt L.Gun	45	50	10	1548,-		B
			7x16	17	BM Drive M.Gun	45	50	10	1476,-		D
			7x16	20	ATS Antares	48	50	4	1852,-	**OE-fit**	B,D
			7x16	21	ATS Antares G.Blk	48	50	4	1896,-	**OE-fit**	B,D
			7,5x16	20	ATS Antares	45	50	10	1852,-		B
			7,5x16	21	ATS Antares G.Blk	45	50	10	1896,-		B
			7x17	17	BM Drive M.Gun	45	50	10	1736,-		D
			7x17	20	ATS Antares	49	50	2	2264,-	**OE-fit**	B,D
			7x17	21	ATS Antares G.Blk	49	50	2	2380,-	**OE-fit**	B,D
			7x17	29	CSP 13	48	50	4	2152,-	**OE-fit**	B,D
			7x17	30	CSP 13 M.Gun	48	50	4	2152,-	**OE-fit**	B,D
			7x17	40	Image Spirit	46	50	8	1476,-	**OE-fit**	B,D
			7x17	46	Image Stella	46	50	8	1812,-	**OE-fit**	B,D
			7x17	47	Image Stella M.Blk	46	50	8	1812,-	**OE-fit**	B,D
			7x17	48	Image Motion	45	50	10	1736,-	**OE-fit**	B,D
			7x17	49	Image Motion G.Gun	45	50	10	1736,-	**OE-fit**	B,D
			7,5x17	9	Nitro Sabre G.Blk	45	50	10	3052,-		B
			7,5x17	16	Advanti Inizio DST	42	50	16	3324,-		B
			7,5x17	20	ATS Antares	45	50	10	2264,-		B
			7,5x17	21	ATS Antares G.Blk	45	50	10	2380,-		B
			7,5x17	26	CSP 18 G.Blk/pol	52	50	-4	2272,-		
			7,5x17	27	CSP 18	52	50	-4	2200,-		

Forts. neste side »

Bilmerke - Bilmodell	Årsmodell	Dimensjon	Felgdim.	Bilde	Felgmodell	ET Felg	ET Bil	Avvik ET	Veil. Pris eks. MVA	Merknader	B,C D, M
SEAT (forts.)			PCD: **5-112** Bolt - Mutter: **14x1,50B**			CB: **57,1**					
			7,5x17	28	CSP 18 G.Blk	52	50	-4	2200,-		
			7,5x17	36	Image Colt	45	50	10	1956,-		B
			7,5x17	50	Image Legend	45	50	10	1812,-	**OE-fit**	B,D
			7,5x17	92	Image Colt L.Gun	45	50	10	1876,-		B
			8x17	17	BM Drive M.Gun	45	50	10	1736,-		
			8x17	48	Image Motion	45	50	10	1736,-		B
			7,5x18	2	Nitro Sapphire FF	48	50	4	3944,-		B
			7,5x18	29	CSP 13	51	50	-2	2932,-	**OE-fit**	B,D
			7,5x18	30	CSP 13 M.Gun	51	50	-2	2932,-	**OE-fit**	B,D
			7,5x18	46	Image Stella	48	50	4	2276,-	**OE-fit**	B,D
			7,5x18	47	Image Stella M.Blk	48	50	4	2276,-	**OE-fit**	B,D
			8x18	7	Nitro Spark G.Blk/Grey	45	50	10	3476,-		B
			8x18	8	Nitro Spark G.Blk/Red	45	50	10	3476,-		B
			8x18	9	Nitro Sabre G.Blk	45	50	10	3496,-		B
			8x18	10	Nitro Demon H.Slv	47	50	6	2972,-		B
			8x18	11	Nitro Demon	47	50	6	2784,-		B
			8x18	16	Advanti Inizio DST	45	50	10	3828,-		B
			8x18	17	BM Drive M.Gun	45	50	10	2296,-		
			8x18	26	CSP 18 G.Blk/pol	47	50	6	2956,-		
			8x18	27	CSP 18	47	50	6	2972,-		
			8x18	28	CSP 18 G.Blk	47	50	6	2972,-		
			8x18	29	CSP 13	48	50	4	2932,-	**OE-fit**	B,D
			8x18	30	CSP 13 M.Gun	48	50	4	2932,-	**OE-fit**	B,D
			8x18	36	Image Colt	45	50	10	2412,-		B
			8x18	48	Image Motion	44	50	12	2204,-	**OE-fit**	B,D
			8x18	49	Image Motion G.Gun	44	50	12	2204,-	**OE-fit**	B,D
			8x18	50	Image Legend	45	50	10	2276,-	**OE-fit**	B,D
			8x18	92	Image Colt L.Gun	45	50	10	2296,-		B
			7,5x19	2	Nitro Sapphire FF	48	50	4	4572,-		B
			8x19	4	Nitro Turismo FF G.Gun/Pol	47	50	6	4644,-		
			8x19	10	Nitro Demon H.Slv	47	50	6	3624,-		B
			8x19	11	Nitro Demon	47	50	6	3376,-		B
			8x19	16	Advanti Inizio DST	45	50	10	4412,-		B
			8x19	26	CSP 18 G.Blk/pol	47	50	6	3596,-		
			8x19	27	CSP 18	47	50	6	3444,-		
			8x19	28	CSP 18 G.Blk	47	50	6	3444,-		
			8x19	29	CSP 13	48	50	4	3404,-	**OE-fit**	B,D
			8x19	30	CSP 13 M.Gun	48	50	4	3404,-	**OE-fit**	B,D
			8x19	48	Image Motion	44	50	12	2532,-	**OE-fit**	B,D
			8x19	49	Image Motion G.Gun	44	50	12	2532,-	**OE-fit**	B,D
			8,5x19	3	Nitro Turismo FF	43	50	14	4492,-		D
			8,5x19	4	Nitro Turismo FF G.Gun/Pol	43	50	14	4644,-		D
			8,5x19	5	Nitro Volcano G.Gun	45	50	10	4388,-		B
			8,5x19	6	Nitro Volcano	45	50	10	4632,-		B
			8,5x19	9	Nitro Sabre G.Blk	45	50	10	4292,-		B,M
			8,5x19	36	Image Colt	45	50	10	3028,-		B,M
			8,5x19	92	Image Colt L.Gun	45	50	10	2876,-		B,M
			8x20	2	Nitro Sapphire FF	48	50	4	5096,-		B
			8x20	4	Nitro Turismo FF G.Gun/Pol	47	50	6	4964,-		
			8,5x20	3	Nitro Turismo FF	43	50	14	4812,-		
			8,5x20	4	Nitro Turismo FF G.Gun/Pol	43	50	14	4964,-		
			8,5x20	5	Nitro Volcano G.Gun	45	50	10	4824,-		B,M
			8,5x20	6	Nitro Volcano	45	50	10	5164,-		B,M
			8,5x20	7	Nitro Spark G.Blk/Grey	45	50	10	4660,-		B,M
			8,5x20	8	Nitro Spark G.Blk/Red	45	50	10	4660,-		B,M
			8,5x20	9	Nitro Sabre G.Blk	45	50	10	4800,-		B,M
			8,5x20	10	Nitro Demon H.Slv	45	50	10	4104,-		B,M
			8,5x20	11	Nitro Demon	45	50	10	3808,-		B,M
			8,5x20	36	Image Colt	45	50	10	3432,-		B,M
			8,5x20	92	Image Colt L.Gun	45	50	10	3276,-		B,M
SEAT			PCD: **5-112** Bolt - Mutter: **14x1,50B**			CB: **57,1**					
Leon (5F) Cupra	01.14-	17-20	7x17	46	Image Stella	46	48	4	1812,-	**OE-fit**	B,D
Cupra (206kW) 18"			7x17	47	Image Stella M.Blk	46	48	4	1812,-	**OE-fit**	B,D
Cupra performance 19"			7,5x17	9	Nitro Sabre G.Blk	45	48	6	3052,-		B
Leon (5F) Cupra st	02.15-	17-20	7,5x17	50	Image Legend	45	48	6	1812,-	**OE-fit**	B,D
Cupra (206kW) 18"			8x17	17	BM Drive M.Gun	45	48	6	1736,-		
Cupra performance 19"			8x17	48	Image Motion	45	48	6	1736,-		B
			7,5x18	2	Nitro Sapphire FF	48	48	0	3944,-		B
			7,5x18	46	Image Stella	48	48	0	2276,-	**OE-fit**	B,D
			7,5x18	47	Image Stella M.Blk	48	48	0	2276,-	**OE-fit**	B,D
			8x18	9	Nitro Sabre G.Blk	45	48	6	3496,-		B
			8x18	10	Nitro Demon H.Slv	47	48	2	2972,-		B
			8x18	11	Nitro Demon	47	48	2	2784,-		B
			8x18	16	Advanti Inizio DST	45	48	6	3828,-		B
			8x18	17	BM Drive M.Gun	45	48	6	2296,-		
			8x18	29	CSP 13	44	48	8	2932,-	**OE-fit**	B,D
			8x18	30	CSP 13 M.Gun	44	48	8	2932,-	**OE-fit**	B,D
			8x18	36	Image Colt	45	48	6	2412,-		B
			8x18	40	Image Spirit	40	48	16	1912,-	**OE-fit**	B,D
			8x18	48	Image Motion	44	48	8	2204,-	**OE-fit**	B,D
			8x18	49	Image Motion G.Gun	44	48	8	2204,-	**OE-fit**	B,D
			8x18	50	Image Legend	45	48	6	2276,-	**OE-fit**	B,D
			8x18	92	Image Colt L.Gun	45	48	6	2296,-		B
			7,5x19	2	Nitro Sapphire FF	48	48	0	4572,-		B
			8x19	10	Nitro Demon H.Slv	47	48	2	3624,-		B
			8x19	11	Nitro Demon	47	48	2	3376,-		B

Forts. neste side »

Bilmerke - Bilmodell	Årsmodell	Dimensjon	Felgdim.	Bilde	Felgmodell	ET Felg	ET Bil	Avvik ET	Veil. Pris eks. MVA	Merknader	B,C D, M
SEAT (forts.)			PCD: **5-112** Bolt - Mutter: **14x1,50B** CB: **57,1**								
			8x19	16	Advanti Inizio DST	45	48	6	4412,-		B
			8x19	29	CSP 13	44	48	8	3404,-	**OE-fit**	B,D
			8x19	30	CSP 13 M.Gun	44	48	8	3404,-	**OE-fit**	B,D
			8x19	48	Image Motion	44	48	8	2532,-	**OE-fit**	B,D
			8x19	49	Image Motion G.Gun	44	48	8	2532,-	**OE-fit**	B,D
			8,5x19	3	Nitro Turismo FF	43	48	10	4492,-		D
			8,5x19	4	Nitro Turismo FF G.Gun/Pol	43	48	10	4644,-		D
			8,5x19	9	Nitro Sabre G.Blk	45	48	6	4292,-		B,M
			8,5x19	36	Image Colt	45	48	6	3028,-		B,M
			8,5x19	92	Image Colt L.Gun	45	48	6	2876,-		B,M
			8x20	2	Nitro Sapphire FF	48	48	0	5096,-		B
			8,5x20	3	Nitro Turismo FF	43	48	10	4812,-		
			8,5x20	4	Nitro Turismo FF G.Gun/Pol	43	48	10	4964,-		
			8,5x20	9	Nitro Sabre G.Blk	45	48	6	4800,-		B,M
			8,5x20	10	Nitro Demon H.Slv	45	48	6	4104,-		B,M
			8,5x20	11	Nitro Demon	45	48	6	3808,-		B,M
			8,5x20	36	Image Colt	45	48	6	3432,-		B,M
			8,5x20	92	Image Colt L.Gun	45	48	6	3276,-		B,M
SEAT			PCD: **5-112** Bolt - Mutter: **14x1,50B** CB: **57,1**								
Leon (KL)	03.20-	16-20	6,5x16	20	ATS Antares	46	46	0	1852,-	**OE-fit**	B,D
TSI e (110kW) 17"			6,5x16	21	ATS Antares G.Blk	46	46	0	1896,-	**OE-fit**	B,D
Leon (KL) st	03.20-	16-20	6,5x16	26	CSP 18 G.Blk/pol	46	46	0	1896,-		
TSI e (110kW) 17"			6,5x16	27	CSP 18	46	46	0	1760,-		
			6,5x16	28	CSP 18 G.Blk	46	46	0	1760,-		
			6,5x16	29	CSP 13	46	46	0	1716,-	**OE-fit**	B,D
			6,5x16	30	CSP 13 M.Gun	46	46	0	1716,-	**OE-fit**	B,D
			6,5x16	36	Image Colt	45	46	2	1624,-		B
			6,5x16	40	Image Spirit	46	46	0	1264,-	**OE-fit**	B,D
			6,5x16	46	Image Stella	46	46	0	1548,-	**OE-fit**	B,D
			6,5x16	47	Image Stella M.Blk	46	46	0	1548,-	**OE-fit**	B,D
			6,5x16	48	Image Motion	46	46	0	1468,-	**OE-fit**	B,D
			6,5x16	49	Image Motion G.Gun	46	46	0	1468,-	**OE-fit**	B,D
			6,5x16	50	Image Legend	46	46	0	1544,-	**OE-fit**	B,D
			6,5x16	92	Image Colt L.Gun	45	46	2	1548,-		B
			7x16	17	BM Drive M.Gun	45	46	2	1476,-	**OE-fit**	B,D
			7x16	20	ATS Antares	48	46	-4	1852,-	**OE-fit**	B,D
			7x16	21	ATS Antares G.Blk	48	46	-4	1896,-	**OE-fit**	B,D
			7x17	17	BM Drive M.Gun	45	46	2	1736,-	**OE-fit**	B,D
			7x17	20	ATS Antares	40	46	12	2264,-	**OE-fit**	B,D
			7x17	21	ATS Antares G.Blk	40	46	12	2380,-	**OE-fit**	B,D
			7x17	29	CSP 13	40	46	12	2152,-	**OE-fit**	B,D
			7x17	30	CSP 13 M.Gun	40	46	12	2152,-	**OE-fit**	B,D
			7x17	40	Image Spirit	46	46	0	1476,-	**OE-fit**	B,D
			7x17	46	Image Stella	46	46	0	1812,-	**OE-fit**	B,D
			7x17	47	Image Stella M.Blk	46	46	0	1812,-	**OE-fit**	B,D
			7x17	48	Image Motion	45	46	2	1736,-	**OE-fit**	B,D
			7x17	49	Image Motion G.Gun	45	46	2	1736,-	**OE-fit**	B,D
			7,5x17	9	Nitro Sabre G.Blk	45	46	2	3052,-		B
			7,5x17	16	Advanti Inizio DST	42	46	8	3324,-		B
			7,5x17	20	ATS Antares	45	46	2	2264,-		B
			7,5x17	21	ATS Antares G.Blk	45	46	2	2380,-		B
			7,5x17	36	Image Colt	45	46	2	1956,-		B
			7,5x17	50	Image Legend	45	46	2	1812,-	**OE-fit**	B,D
			7,5x17	92	Image Colt L.Gun	45	46	2	1876,-		B
			8x17	17	BM Drive M.Gun	45	46	2	1736,-		B
			8x17	48	Image Motion	45	46	2	1736,-		B
			7,5x18	2	Nitro Sapphire FF	48	46	-4	3944,-		B
			7,5x18	46	Image Stella	48	46	-4	2276,-	**OE-fit**	B,D
			7,5x18	47	Image Stella M.Blk	48	46	-4	2276,-	**OE-fit**	B,D
			8x18	7	Nitro Spark G.Blk/Grey	45	46	2	3476,-		B
			8x18	8	Nitro Spark G.Blk/Red	45	46	2	3476,-		
			8x18	9	Nitro Sabre G.Blk	45	46	2	3496,-		B
			8x18	16	Advanti Inizio DST	45	46	2	3828,-		B
			8x18	17	BM Drive M.Gun	45	46	2	2296,-		B
			8x18	20	ATS Antares	47	46	-2	3056,-		B
			8x18	21	ATS Antares G.Blk	47	46	-2	3136,-		B
			8x18	26	CSP 18 G.Blk/pol	47	46	-2	2956,-		
			8x18	27	CSP 18	47	46	-2	2972,-		
			8x18	28	CSP 18 G.Blk	47	46	-2	2972,-		
			8x18	29	CSP 13	48	46	-4	2932,-	**OE-fit**	B,D
			8x18	30	CSP 13 M.Gun	48	46	-4	2932,-	**OE-fit**	B,D
			8x18	36	Image Colt	45	46	2	2412,-		B
			8x18	48	Image Motion	44	46	4	2204,-	**OE-fit**	B,D
			8x18	49	Image Motion G.Gun	44	46	4	2204,-	**OE-fit**	B,D
			8x18	50	Image Legend	45	46	2	2276,-	**OE-fit**	B,D
			8x18	92	Image Colt L.Gun	45	46	2	2296,-		B
			7,5x19	2	Nitro Sapphire FF	48	46	-4	4572,-		B
			8x19	4	Nitro Turismo FF G.Gun/Pol	47	46	-2	4644,-		
			8x19	26	CSP 18 G.Blk/pol	47	46	-2	3596,-		
			8x19	27	CSP 18	47	46	-2	3444,-		
			8x19	28	CSP 18 G.Blk	47	46	-2	3444,-		
			8x19	29	CSP 13	48	46	-4	3404,-	**OE-fit**	B,D
			8x19	30	CSP 13 M.Gun	48	46	-4	3404,-	**OE-fit**	B,D
			8x19	48	Image Motion	44	46	4	2532,-	**OE-fit**	B,D
			8x19	49	Image Motion G.Gun	44	46	4	2532,-	**OE-fit**	B,D
			8,5x19	3	Nitro Turismo FF	43	46	6	4492,-	**OE-fit**	B,D

Forts. neste side »

Bilmerke - Bilmodell	Årsmodell	Dimensjon	Felgdim.	Bilde	Felgmodell	ET Felg	ET Bil	Avvik ET	Veil. Pris eks. MVA	Merknader	B,C D, M
SEAT (forts.)			PCD: **5-112** Bolt - Mutter: **14x1,50B** CB: **57,1**								
			8,5x19	4	Nitro Turismo FF G.Gun/Pol	43	46	6	4644,-	**OE-fit**	B,D
			8,5x19	5	Nitro Volcano G.Gun	45	46	2	4388,-		B
			8,5x19	6	Nitro Volcano	45	46	2	4632,-		B
			8,5x19	9	Nitro Sabre G.Blk	45	46	2	4292,-		B
			8,5x19	36	Image Colt	45	46	2	3028,-		B
			8,5x19	92	Image Colt L.Gun	45	46	2	2876,-		B
			8x20	2	Nitro Sapphire FF	48	46	-4	5096,-		B
			8x20	4	Nitro Turismo FF G.Gun/Pol	47	46	-2	4964,-		
			8,5x20	3	Nitro Turismo FF	43	46	6	4812,-		
			8,5x20	4	Nitro Turismo FF G.Gun/Pol	43	46	6	4964,-		
			8,5x20	5	Nitro Volcano G.Gun	45	46	2	4824,-		B
			8,5x20	6	Nitro Volcano	45	46	2	5164,-		B
			8,5x20	7	Nitro Spark G.Blk/Grey	45	46	2	4660,-		B
			8,5x20	8	Nitro Spark G.Blk/Red	45	46	2	4660,-		B
			8,5x20	9	Nitro Sabre G.Blk	45	46	2	4800,-		B
			8,5x20	36	Image Colt	45	46	2	3432,-		B
			8,5x20	92	Image Colt L.Gun	45	46	2	3276,-		B
SEAT			PCD: **5-112** Bolt - Mutter: **14x1,50B** CB: **57,1**								
Exeo (3R)	02.09-05.13	16-20	6,5x16	29	CSP 13	41	45	8	1716,-	**OE-fit**	B,D
			6,5x16	30	CSP 13 M.Gun	41	45	8	1716,-	**OE-fit**	B,D
			6,5x16	36	Image Colt	35	45	20	1624,-		B
			6,5x16	40	Image Spirit	41	45	8	1264,-	**OE-fit**	B,D
			6,5x16	46	Image Stella	41	45	8	1548,-	**OE-fit**	B,D
			6,5x16	47	Image Stella M.Blk	41	45	8	1548,-	**OE-fit**	B,D
			6,5x16	48	Image Motion	41	45	8	1468,-	**OE-fit**	B,D
			6,5x16	50	Image Legend	41	45	8	1544,-	**OE-fit**	B,D
			6,5x16	92	Image Colt L.Gun	35	45	20	1548,-		B
			7x16	17	BM Drive M.Gun	38	45	14	1476,-		D
			7x17	17	BM Drive M.Gun	40	45	10	1736,-		D
			7x17	29	CSP 13	40	45	10	2152,-	**OE-fit**	B,D
			7x17	30	CSP 13 M.Gun	40	45	10	2152,-	**OE-fit**	B,D
			7x17	46	Image Stella	40	45	10	1812,-	**OE-fit**	B,D
			7x17	47	Image Stella M.Blk	40	45	10	1812,-	**OE-fit**	B,D
			7x17	48	Image Motion	35	45	20	1736,-	**OE-fit**	B,D
			7x17	49	Image Motion G.Gun	40	45	10	1736,-	**OE-fit**	B,D
			7,5x17	36	Image Colt	35	45	20	1956,-		B
			7,5x17	46	Image Stella	35	45	20	1812,-		B
			7,5x17	47	Image Stella M.Blk	35	45	20	1812,-		B
			7,5x17	50	Image Legend	40	45	10	1812,-	**OE-fit**	B,D
			7,5x17	92	Image Colt L.Gun	35	45	20	1876,-		B
			8x17	9	Nitro Sabre G.Blk	35	45	20	3108,-		B
			8x17	48	Image Motion	35	45	20	1736,-		B
			8x17	49	Image Motion G.Gun	35	45	20	1736,-		B
			8x18	2	Nitro Sapphire FF	39	45	12	4036,-		B
			8x18	7	Nitro Spark G.Blk/Grey	35	45	20	3476,-		B
			8x18	9	Nitro Sabre G.Blk	35	45	20	3496,-		B
			8x18	10	Nitro Demon H.Slv	40	45	10	2972,-		B
			8x18	11	Nitro Demon	40	45	10	2784,-		B
			8x18	16	Advanti Inizio DST	35	45	20	3828,-		B
			8x18	17	BM Drive M.Gun	40	45	10	2296,-		D
			8x18	29	CSP 13	40	45	10	2932,-	**OE-fit**	B,D
			8x18	30	CSP 13 M.Gun	40	45	10	2932,-	**OE-fit**	B,D
			8x18	36	Image Colt	35	45	20	2412,-		B
			8x18	46	Image Stella	40	45	10	2276,-	**OE-fit**	B,D
			8x18	47	Image Stella M.Blk	40	45	10	2276,-	**OE-fit**	B,D
			8x18	48	Image Motion	35	45	20	2204,-		B
			8x18	49	Image Motion G.Gun	35	45	20	2204,-		B
			8x18	50	Image Legend	40	45	10	2276,-	**OE-fit**	B,D
			8x18	92	Image Colt L.Gun	35	45	20	2296,-		B
			8x19	2	Nitro Sapphire FF	39	45	12	4684,-		B
			8x19	10	Nitro Demon H.Slv	40	45	10	3624,-		B
			8x19	16	Advanti Inizio DST	35	45	20	4412,-		B
			8x19	29	CSP 13	40	45	10	3404,-	**OE-fit**	B,D
			8x19	30	CSP 13 M.Gun	40	45	10	3404,-	**OE-fit**	B,D
			8x19	48	Image Motion	35	45	20	2532,-		B
			8x19	49	Image Motion G.Gun	35	45	20	2532,-		B
			8,5x20	7	Nitro Spark G.Blk/Grey	35	45	20	4660,-		B,M
			8,5x20	10	Nitro Demon H.Slv	45	45	0	4104,-		B
SEAT			PCD: **5-112** Bolt - Mutter: **14x1,50B** CB: **57,1**								
Alhambra	05.96-04.01	15-20	6,5x16	46	Image Stella	46	55	18	1548,-		D
2.8i 16"			6,5x16	47	Image Stella M.Blk	46	55	18	1548,-		D
Alhambra	05.01-08.10	16-20	8x18	7	Nitro Spark G.Blk/Grey	45	55	20	3476,-		
			8x18	8	Nitro Spark G.Blk/Red	45	55	20	3476,-		B
			8x18	53	Nitro Hammer	48	55	14	3256,-		
			8,5x20	7	Nitro Spark G.Blk/Grey	45	55	20	4660,-		
			8,5x20	8	Nitro Spark G.Blk/Red	45	55	20	4660,-		
			8,5x20	53	Nitro Hammer	48	55	14	4268,-		
SEAT			PCD: **5-112** Bolt - Mutter: **14x1,50B** CB: **57,1**								
Alhambra (7N)	09.10-	16-20	6,5x16	20	ATS Antares	33	39	12	1852,-	**OE-fit**	B,D
			6,5x16	21	ATS Antares G.Blk	33	39	12	1896,-	**OE-fit**	B,D
			6,5x16	29	CSP 13	33	39	12	1716,-	**OE-fit**	B,D
			6,5x16	30	CSP 13 M.Gun	33	39	12	1716,-	**OE-fit**	B,D
			6,5x16	36	Image Colt	35	39	8	1624,-		B
			6,5x16	92	Image Colt L.Gun	35	39	8	1548,-		B
			7x16	17	BM Drive M.Gun	38	39	2	1476,-		D

Forts. neste side »

Bilmerke - Bilmodell	Årsmodell	Dimensjon	Felgdim.	Bilde	Felgmodell	ET Felg	ET Bil	Avvik ET	Veil. Pris eks. MVA	Merknader	B,C D, M
SEAT (forts.)				PCD: **5-112** Bolt - Mutter: **14x1,50B**		CB: **57,1**					
			7x16	20	ATS Antares	35	39	8	1852,-		B
			7x16	21	ATS Antares G.Blk	35	39	8	1896,-		B
			7x16	48	Image Motion	35	39	8	1468,-		B
			7x16	50	Image Legend	35	39	8	1544,-		B
			7,5x16	20	ATS Antares	37	39	4	1852,-		
			7,5x16	21	ATS Antares G.Blk	37	39	4	1896,-		
			7x17	17	BM Drive M.Gun	40	39	-2	1736,-		D
			7x17	29	CSP 13	40	39	-2	2152,-	**OE-fit**	B,D
			7x17	30	CSP 13 M.Gun	40	39	-2	2152,-	**OE-fit**	B,D
			7x17	40	Image Spirit	40	39	-2	1476,-	**OE-fit**	B,D
			7x17	46	Image Stella	40	39	-2	1812,-	**OE-fit**	B,D
			7x17	47	Image Stella M.Blk	40	39	-2	1812,-	**OE-fit**	B,D
			7x17	48	Image Motion	35	39	8	1736,-	**OE-fit**	B,D
			7x17	49	Image Motion G.Gun	40	39	-2	1736,-	**OE-fit**	B,D
			7,5x17	20	ATS Antares	37	39	4	2264,-		B
			7,5x17	21	ATS Antares G.Blk	37	39	4	2380,-		B
			7,5x17	36	Image Colt	35	39	8	1956,-		
			7,5x17	50	Image Legend	40	39	-2	1812,-	**OE-fit**	B,D
			7,5x17	92	Image Colt L.Gun	35	39	8	1876,-		B
			8x17	9	Nitro Sabre G.Blk	35	39	8	3108,-		B
			8x17	17	BM Drive M.Gun	35	39	8	1736,-		B
			8x17	48	Image Motion	35	39	8	1736,-		B
			8x17	49	Image Motion G.Gun	35	39	8	1736,-		B
			7,5x18	29	CSP 13	35	39	8	2932,-	**OE-fit**	B,D
			7,5x18	30	CSP 13 M.Gun	35	39	8	2932,-	**OE-fit**	B,D
			8x18	2	Nitro Sapphire FF	39	39	0	4036,-		
			8x18	7	Nitro Spark G.Blk/Grey	35	39	8	3476,-		B
			8x18	9	Nitro Sabre G.Blk	35	39	8	3496,-		B
			8x18	10	Nitro Demon H.Slv	40	39	-2	2972,-		B
			8x18	11	Nitro Demon	40	39	-2	2784,-		B
			8x18	16	Advanti Inizio DST	35	39	8	3828,-		
			8x18	17	BM Drive M.Gun	40	39	-2	2296,-		D
			8x18	36	Image Colt	35	39	8	2412,-		B
			8x18	46	Image Stella	40	39	-2	2276,-	**OE-fit**	B,D
			8x18	47	Image Stella M.Blk	40	39	-2	2276,-	**OE-fit**	B,D
			8x18	49	Image Motion G.Gun	44	39	-10	2204,-	**OE-fit**	B,D
			8x18	50	Image Legend	40	39	-2	2276,-	**OE-fit**	B,D
			8x18	92	Image Colt L.Gun	35	39	8	2296,-		B
			8x19	2	Nitro Sapphire FF	39	39	0	4684,-		
			8x19	10	Nitro Demon H.Slv	40	39	-2	3624,-		B
			8x19	16	Advanti Inizio DST	35	39	8	4412,-		
			8x19	48	Image Motion	44	39	-10	2532,-	**OE-fit**	B,D
			8x19	49	Image Motion G.Gun	44	39	-10	2532,-	**OE-fit**	B,D
			8,5x19	9	Nitro Sabre G.Blk	35	39	8	4292,-		B,M
			8,5x19	36	Image Colt	35	39	8	3028,-		B
			8,5x19	92	Image Colt L.Gun	35	39	8	2876,-		B
			8,5x20	1	Nitro Throne FF	40	39	-2	5060,-		
			8,5x20	7	Nitro Spark G.Blk/Grey	35	39	8	4660,-		B,M
			8,5x20	9	Nitro Sabre G.Blk	35	39	8	4800,-		B,M
			8,5x20	10	Nitro Demon H.Slv	38	39	2	4104,-		B,M
			8,5x20	11	Nitro Demon	38	39	2	3808,-		B,M
			8,5x20	36	Image Colt	35	39	8	3432,-		B
			8,5x20	92	Image Colt L.Gun	35	39	8	3276,-		B
SEAT				PCD: **5-100** Bolt - Mutter: **14x1,50B**		CB: **57,1**					
Arona (KJ)	10.17-	16-20	6,5x16	29	CSP 13	45	45	0	1716,-	**OE-fit**	B,D
			6,5x16	30	CSP 13 M.Gun	45	45	0	1716,-	**OE-fit**	B,D
			6,5x16	36	Image Colt	40	45	10	1624,-		
			6,5x16	46	Image Stella	43	45	4	1548,-	**OE-fit**	B,D
			6,5x16	47	Image Stella M.Blk	43	45	4	1548,-	**OE-fit**	B,D
			6,5x16	48	Image Motion	38	45	14	1468,-	**OE-fit**	B,D
			6,5x16	49	Image Motion G.Gun	38	45	14	1468,-	**OE-fit**	B,D
			6,5x16	92	Image Colt L.Gun	40	45	10	1548,-		
			7x17	29	CSP 13	47	45	-4	2152,-	**OE-fit**	B,D
			7x17	30	CSP 13 M.Gun	47	45	-4	2152,-	**OE-fit**	B,D
			7x17	46	Image Stella	47	45	-4	1812,-	**OE-fit**	B,D
			7x17	47	Image Stella M.Blk	47	45	-4	1812,-	**OE-fit**	B,D
			7,5x17	16	Advanti Inizio DST	42	45	6	3324,-	**OE-fit**	B,D
			7,5x17	36	Image Colt	43	45	4	1956,-		
			7,5x17	92	Image Colt L.Gun	43	45	4	1876,-		
			8x18	16	Advanti Inizio DST	42	45	6	3828,-	**OE-fit**	B,D,M
			8x19	16	Advanti Inizio DST	42	45	6	4412,-	**OE-fit**	B,D,M
SEAT				PCD: **5-112** Bolt - Mutter: **14x1,50B**		CB: **57,1**					
Ateca (5FP)	07.16-	16-21	6,5x16	20	ATS Antares	41	43	4	1852,-	**OE-fit**	B,D
2.0TDI (140kW) 17"			6,5x16	21	ATS Antares G.Blk	41	43	4	1896,-	**OE-fit**	B,D
			6,5x16	29	CSP 13	41	43	4	1716,-	**OE-fit**	B,D
			6,5x16	30	CSP 13 M.Gun	41	43	4	1716,-	**OE-fit**	B,D
			6,5x16	36	Image Colt	45	43	-4	1624,-		B
			6,5x16	40	Image Spirit	41	43	4	1264,-	**OE-fit**	B,D
			6,5x16	46	Image Stella	41	43	4	1548,-	**OE-fit**	B,D
			6,5x16	47	Image Stella M.Blk	41	43	4	1548,-	**OE-fit**	B,D
			6,5x16	48	Image Motion	41	43	4	1468,-	**OE-fit**	B,D
			6,5x16	50	Image Legend	41	43	4	1544,-	**OE-fit**	B,D
			6,5x16	92	Image Colt L.Gun	45	43	-4	1548,-		B
			7x16	17	BM Drive M.Gun	38	43	10	1476,-		D
			7,5x16	20	ATS Antares	45	43	-4	1852,-		B
			7,5x16	21	ATS Antares G.Blk	45	43	-4	1896,-		B

Forts. neste side »

Bilmerke - Bilmodell	Årsmodell	Dimensjon	Felgdim.	Bilde	Felgmodell	ET Felg	ET Bil	Avvik ET	Veil. Pris eks. MVA	Merknader	B,C D, M
SEAT (forts.)			PCD: **5-112** Bolt - Mutter: **14x1,50B** CB: **57,1**								
			7x17	17	BM Drive M.Gun	40	43	6	1736,-		D
			7x17	20	ATS Antares	40	43	6	2264,-	**OE-fit**	B,D
			7x17	21	ATS Antares G.Blk	40	43	6	2380,-	**OE-fit**	B,D
			7x17	29	CSP 13	40	43	6	2152,-	**OE-fit**	B,D
			7x17	30	CSP 13 M.Gun	40	43	6	2152,-	**OE-fit**	B,D
			7x17	40	Image Spirit	40	43	6	1476,-	**OE-fit**	B,D
			7x17	46	Image Stella	40	43	6	1812,-	**OE-fit**	B,D
			7x17	47	Image Stella M.Blk	40	43	6	1812,-	**OE-fit**	B,D
			7x17	48	Image Motion	40	43	6	1736,-	**OE-fit**	B,D
			7x17	49	Image Motion G.Gun	40	43	6	1736,-	**OE-fit**	B,D
			7,5x17	9	Nitro Sabre G.Blk	45	43	-4	3052,-		B
			7,5x17	16	Advanti Inizio DST	42	43	2	3324,-		B
			7,5x17	36	Image Colt	45	43	-4	1956,-		B
			7,5x17	50	Image Legend	40	43	6	1812,-	**OE-fit**	B,D
			7,5x17	92	Image Colt L.Gun	45	43	-4	1876,-		B
			8x17	17	BM Drive M.Gun	45	43	-4	1736,-		
			8x18	7	Nitro Spark G.Blk/Grey	45	43	-4	3476,-		B
			8x18	8	Nitro Spark G.Blk/Red	45	43	-4	3476,-		B
			8x18	9	Nitro Sabre G.Blk	45	43	-4	3496,-		B
			8x18	10	Nitro Demon H.Slv	40	43	6	2972,-		B
			8x18	11	Nitro Demon	40	43	6	2784,-		B
			8x18	16	Advanti Inizio DST	45	43	-4	3828,-		B
			8x18	17	BM Drive M.Gun	40	43	6	2296,-		D
			8x18	29	CSP 13	44	43	-2	2932,-	**OE-fit**	B,D
			8x18	30	CSP 13 M.Gun	44	43	-2	2932,-	**OE-fit**	B,D
			8x18	36	Image Colt	45	43	-4	2412,-		B
			8x18	40	Image Spirit	40	43	6	1912,-	**OE-fit**	B,D
			8x18	46	Image Stella	40	43	6	2276,-	**OE-fit**	B,D
			8x18	47	Image Stella M.Blk	40	43	6	2276,-	**OE-fit**	B,D
			8x18	48	Image Motion	44	43	-2	2204,-	**OE-fit**	B,D
			8x18	49	Image Motion G.Gun	44	43	-2	2204,-	**OE-fit**	B,D
			8x18	50	Image Legend	45	43	-4	2276,-	**OE-fit**	B,D
			8x18	92	Image Colt L.Gun	45	43	-4	2296,-		B
			8x19	10	Nitro Demon H.Slv	40	43	6	3624,-		B
			8x19	16	Advanti Inizio DST	45	43	-4	4412,-		B
			8x19	29	CSP 13	44	43	-2	3404,-	**OE-fit**	B,D
			8x19	30	CSP 13 M.Gun	44	43	-2	3404,-	**OE-fit**	B,D
			8x19	48	Image Motion	44	43	-2	2532,-	**OE-fit**	B,D
			8x19	49	Image Motion G.Gun	44	43	-2	2532,-	**OE-fit**	B,D
			8,5x19	3	Nitro Turismo FF	43	43	0	4492,-		D
			8,5x19	4	Nitro Turismo FF G.Gun/Pol	43	43	0	4644,-		D
			8,5x19	5	Nitro Volcano G.Gun	45	43	-4	4388,-		
			8,5x19	6	Nitro Volcano	45	43	-4	4632,-		
			8,5x19	9	Nitro Sabre G.Blk	45	43	-4	4292,-		B
			8,5x19	36	Image Colt	45	43	-4	3028,-		B
			8,5x19	92	Image Colt L.Gun	45	43	-4	2876,-		B
			8,5x20	1	Nitro Throne FF	40	43	6	5060,-		M
			8,5x20	3	Nitro Turismo FF	43	43	0	4812,-		
			8,5x20	4	Nitro Turismo FF G.Gun/Pol	43	43	0	4964,-		
			8,5x20	5	Nitro Volcano G.Gun	45	43	-4	4824,-		B
			8,5x20	6	Nitro Volcano	45	43	-4	5164,-		B
			8,5x20	7	Nitro Spark G.Blk/Grey	45	43	-4	4660,-		B
			8,5x20	8	Nitro Spark G.Blk/Red	45	43	-4	4660,-		B
			8,5x20	9	Nitro Sabre G.Blk	45	43	-4	4800,-		B
			8,5x20	10	Nitro Demon H.Slv	45	43	-4	4104,-		B
			8,5x20	11	Nitro Demon	45	43	-4	3808,-		B
			8,5x20	36	Image Colt	45	43	-4	3432,-		B
			8,5x20	92	Image Colt L.Gun	45	43	-4	3276,-		B
			9x21	5	Nitro Volcano G.Gun	45	43	-4	5540,-		B,M
			9x21	6	Nitro Volcano	45	43	-4	5996,-		B,M
SEAT			PCD: **5-112** Bolt - Mutter: **14x1,50B** CB: **57,1**								
Ateca (5FP) Cupra	11.18-	18-21	8x18	9	Nitro Sabre G.Blk	45	45	0	3496,-		B
(Biler med Brembobremsar			8x18	10	Nitro Demon H.Slv	40	45	10	2972,-		B
krever 19")			8x18	11	Nitro Demon	40	45	10	2784,-		B
			8x18	16	Advanti Inizio DST	45	45	0	3828,-		B
			8x18	17	BM Drive M.Gun	40	45	10	2296,-	**OE-fit**	B,D
			8x18	20	ATS Antares	40	45	10	3056,-		B
			8x18	21	ATS Antares G.Blk	40	45	10	3136,-		B
			8x18	29	CSP 13	40	45	10	2932,-	**OE-fit**	B,D
			8x18	30	CSP 13 M.Gun	40	45	10	2932,-	**OE-fit**	B,D
			8x18	36	Image Colt	45	45	0	2412,-		B
			8x18	46	Image Stella	40	45	10	2276,-	**OE-fit**	B,D
			8x18	47	Image Stella M.Blk	40	45	10	2276,-	**OE-fit**	B,D
			8x18	48	Image Motion	44	45	2	2204,-	**OE-fit**	B,D
			8x18	49	Image Motion G.Gun	44	45	2	2204,-	**OE-fit**	B,D
			8x18	50	Image Legend	40	45	10	2276,-	**OE-fit**	B,D
			8x18	92	Image Colt L.Gun	45	45	0	2296,-		B
			8x19	10	Nitro Demon H.Slv	40	45	10	3624,-		B
			8x19	16	Advanti Inizio DST	45	45	0	4412,-		B
			8x19	29	CSP 13	40	45	10	3404,-	**OE-fit**	B,D
			8x19	30	CSP 13 M.Gun	40	45	10	3404,-	**OE-fit**	B,D
			8x19	48	Image Motion	44	45	2	2532,-	**OE-fit**	B,D
			8x19	49	Image Motion G.Gun	44	45	2	2532,-	**OE-fit**	B,D
			8,5x19	3	Nitro Turismo FF	43	45	4	4492,-	**OE-fit**	B,D
			8,5x19	4	Nitro Turismo FF G.Gun/Pol	43	45	4	4644,-	**OE-fit**	B,D
			8,5x19	5	Nitro Volcano G.Gun	45	45	0	4388,-		B

Forts. neste side »

Bilmerke - Bilmodell	Årsmodell	Dimensjon	Felgdim.	Bilde	Felgmodell	ET Felg	ET Bil	Avvik ET	Veil. Pris eks. MVA	Merknader	B,C D, M
SEAT (forts.)				PCD: **5-112** Bolt - Mutter: **14x1,50B**		CB: **57,1**					
			8,5x19	6	Nitro Volcano	45	45	0	4632,-		B
			8,5x19	9	Nitro Sabre G.Blk	45	45	0	4292,-		B
			8,5x19	36	Image Colt	45	45	0	3028,-		B
			8,5x19	92	Image Colt L.Gun	45	45	0	2876,-		B
			8,5x20	3	Nitro Turismo FF	43	45	4	4812,-		
			8,5x20	4	Nitro Turismo FF G.Gun/Pol	43	45	4	4964,-		
			8,5x20	5	Nitro Volcano G.Gun	45	45	0	4824,-		B
			8,5x20	6	Nitro Volcano	45	45	0	5164,-		B
			8,5x20	9	Nitro Sabre G.Blk	45	45	0	4800,-		B
			8,5x20	10	Nitro Demon H.Slv	45	45	0	4104,-		B
			8,5x20	11	Nitro Demon	45	45	0	3808,-		B
			8,5x20	36	Image Colt	45	45	0	3432,-		B
			8,5x20	92	Image Colt L.Gun	45	45	0	3276,-		B
			9x20	5	Nitro Volcano G.Gun	40	45	10	4824,-		B,M
			9x20	6	Nitro Volcano	40	45	10	5164,-		B,M
			9x20	10	Nitro Demon H.Slv	40	45	10	4104,-		B,M
			9x20	11	Nitro Demon	40	45	10	3808,-		B,M
			9x21	5	Nitro Volcano G.Gun	40	45	10	5540,-		B,M
			9x21	6	Nitro Volcano	40	45	10	5996,-		B,M
SEAT				PCD: **5-112** Bolt - Mutter: **14x1,50B**		CB: **57,1**					
Tarraco (KN)	12.18-	17-22	7x17	17	BM Drive M.Gun	40	40	0	1736,-	**OE-fit**	B,D
			7x17	20	ATS Antares	40	40	0	2264,-	**OE-fit**	B,D
			7x17	21	ATS Antares G.Blk	40	40	0	2380,-	**OE-fit**	B,D
			7x17	29	CSP 13	40	40	0	2152,-	**OE-fit**	B,D
			7x17	30	CSP 13 M.Gun	40	40	0	2152,-	**OE-fit**	B,D
			7x17	40	Image Spirit	40	40	0	1476,-	**OE-fit**	B,D
			7x17	46	Image Stella	40	40	0	1812,-	**OE-fit**	B,D
			7x17	47	Image Stella M.Blk	40	40	0	1812,-	**OE-fit**	B,D
			7x17	48	Image Motion	40	40	0	1736,-	**OE-fit**	B,D
			7x17	49	Image Motion G.Gun	40	40	0	1736,-	**OE-fit**	B,D
			7,5x17	16	Advanti Inizio DST	42	40	-4	3324,-		B
			7,5x17	36	Image Colt	35	40	10	1956,-		B
			7,5x17	46	Image Stella	35	40	10	1812,-		B
			7,5x17	47	Image Stella M.Blk	35	40	10	1812,-		B
			7,5x17	92	Image Colt L.Gun	35	40	10	1876,-		B
			8x17	9	Nitro Sabre G.Blk	35	40	10	3108,-		B
			8x17	17	BM Drive M.Gun	35	40	10	1736,-		B
			8x17	48	Image Motion	35	40	10	1736,-		B
			8x17	49	Image Motion G.Gun	35	40	10	1736,-		B
			7,5x18	29	CSP 13	35	40	10	2932,-	**OE-fit**	B,D
			7,5x18	30	CSP 13 M.Gun	35	40	10	2932,-	**OE-fit**	B,D
			8x18	2	Nitro Sapphire FF	39	40	2	4036,-		B
			8x18	7	Nitro Spark G.Blk/Grey	35	40	10	3476,-		B
			8x18	9	Nitro Sabre G.Blk	35	40	10	3496,-		B
			8x18	10	Nitro Demon H.Slv	40	40	0	2972,-		B
			8x18	11	Nitro Demon	40	40	0	2784,-		B
			8x18	16	Advanti Inizio DST	35	40	10	3828,-		B
			8x18	17	BM Drive M.Gun	40	40	0	2296,-	**OE-fit**	B,D
			8x18	20	ATS Antares	40	40	0	3056,-		B
			8x18	21	ATS Antares G.Blk	40	40	0	3136,-		B
			8x18	29	CSP 13	40	40	0	2932,-	**OE-fit**	B,D
			8x18	30	CSP 13 M.Gun	40	40	0	2932,-	**OE-fit**	B,D
			8x18	36	Image Colt	35	40	10	2412,-		B
			8x18	40	Image Spirit	40	40	0	1912,-	**OE-fit**	B,D
			8x18	46	Image Stella	40	40	0	2276,-	**OE-fit**	B,D
			8x18	47	Image Stella M.Blk	40	40	0	2276,-	**OE-fit**	B,D
			8x18	48	Image Motion	44	40	-8	2204,-	**OE-fit**	B,D
			8x18	49	Image Motion G.Gun	44	40	-8	2204,-	**OE-fit**	B,D
			8x18	50	Image Legend	40	40	0	2276,-	**OE-fit**	B,D
			8x18	92	Image Colt L.Gun	35	40	10	2296,-		B
			8,5x18	16	Advanti Inizio DST	35	40	10	3828,-		B
			8x19	2	Nitro Sapphire FF	39	40	2	4684,-		B
			8x19	3	Nitro Turismo FF	30	40	20	4492,-		
			8x19	4	Nitro Turismo FF G.Gun/Pol	30	40	20	4644,-		
			8x19	10	Nitro Demon H.Slv	40	40	0	3624,-		B
			8x19	16	Advanti Inizio DST	35	40	10	4412,-		B
			8x19	29	CSP 13	40	40	0	3404,-	**OE-fit**	B,D
			8x19	30	CSP 13 M.Gun	40	40	0	3404,-	**OE-fit**	B,D
			8x19	48	Image Motion	44	40	-8	2532,-	**OE-fit**	B,D
			8x19	49	Image Motion G.Gun	44	40	-8	2532,-	**OE-fit**	B,D
			8,5x19	2	Nitro Sapphire FF	40	40	0	4684,-		B
			8,5x19	3	Nitro Turismo FF	35	40	10	4492,-		
			8,5x19	4	Nitro Turismo FF G.Gun/Pol	35	40	10	4644,-		
			8,5x19	5	Nitro Volcano G.Gun	32	40	16	4388,-		B
			8,5x19	6	Nitro Volcano	32	40	16	4632,-		B
			8,5x19	9	Nitro Sabre G.Blk	35	40	10	4292,-		B
			8,5x19	16	Advanti Inizio DST	35	40	10	4412,-		B
			8,5x19	36	Image Colt	35	40	10	3028,-		B
			8,5x19	92	Image Colt L.Gun	35	40	10	2876,-		B
			8,5x20	1	Nitro Throne FF	40	40	0	5060,-		
			8,5x20	2	Nitro Sapphire FF	40	40	0	5216,-		B
			8,5x20	3	Nitro Turismo FF	35	40	10	4812,-		
			8,5x20	4	Nitro Turismo FF G.Gun/Pol	35	40	10	4964,-		
			8,5x20	7	Nitro Spark G.Blk/Grey	35	40	10	4660,-		B
			8,5x20	9	Nitro Sabre G.Blk	35	40	10	4800,-		B
			8,5x20	10	Nitro Demon H.Slv	38	40	4	4104,-		B

Forts. neste side »

Bilmerke - Bilmodell	Årsmodell	Dimensjon	Felgdim.	Bilde	Felgmodell	ET Felg	ET Bil	Avvik ET	Veil. Pris eks. MVA	Merknader	B,C D, M
SEAT (forts.)			PCD: **5-112** Bolt - Mutter: **14x1,50B** CB: **57,1**								
			8,5x20	11	Nitro Demon	38	40	4	3808,-		B
			8,5x20	36	Image Colt	35	40	10	3432,-		B
			8,5x20	92	Image Colt L.Gun	35	40	10	3276,-		B
			9x20	1	Nitro Throne FF	35	40	10	5060,-		
			9x20	3	Nitro Turismo FF	30	40	20	4960,-		
			9x20	4	Nitro Turismo FF G.Gun/Pol	30	40	20	5048,-		
			9x20	5	Nitro Volcano G.Gun	32	40	16	4824,-		B
			9x20	6	Nitro Volcano	32	40	16	5164,-		B
			9x20	10	Nitro Demon H.Slv	40	40	0	4104,-		B
			9x20	11	Nitro Demon	40	40	0	3808,-		B
			9x20	12	Nitro Edge M.Blk	40	40	0	4220,-		
			9x20	15	Nitro Magnum	35	40	10	4572,-		
			9x21	5	Nitro Volcano G.Gun	32	40	16	5540,-		B
			9x21	6	Nitro Volcano	32	40	16	5996,-		B
			9x22	12	Nitro Edge M.Blk	40	40	0	4888,-		
			9x22	15	Nitro Magnum	35	40	10	5420,-		
SKODA			PCD: **4-100** Bolt - Mutter: **12x1,50B** CB: **57,1**								
Citigo (AA)	09.11-	14-17	5x14	37	Image Comet	35	35	0	1264,-	**OE-fit**	B,D
			5,5x14	37	Image Comet	30	35	10	1264,-	**OE-fit**	B,D
			5,5x14	38	Image Comet Slv	30	35	10	1264,-	**OE-fit**	B,D
			6x15	19	ATS Streetrallye Slv	38	35	-6	1960,-		
			6x15	37	Image Comet	40	35	-10	1316,-	**OE-fit**	B,D
			6x15	38	Image Comet Slv	40	35	-10	1316,-	**OE-fit**	B,D
			6x15	42	Image Brio	40	35	-10	1304,-		
			6x15	45	Image Ride	38	35	-6	1552,-		
			6x16	37	Image Comet	40	35	-10	1536,-		
			6x16	38	Image Comet Slv	40	35	-10	1536,-		
			6,5x16	19	ATS Streetrallye Slv	40	35	-10	2240,-		
			6,5x16	34	CSP 16	40	35	-10	1468,-		
			6,5x16	42	Image Brio	38	35	-6	1524,-		
			7x17	42	Image Brio	40	35	-10	1832,-		
SKODA			PCD: **5-100** Bolt - Mutter: **14x1,50B** CB: **57,1**								
Fabia	01.00-04.07	14-18	5,5x14	45	Image Ride	38	43	10	1392,-	**OE-fit**	B,D
2.0i 15"			6x15	17	BM Drive M.Gun	38	43	10	1276,-		D
1.9TDi RS (96kW) 15"			6x15	20	ATS Antares	38	43	10	1496,-	**OE-fit**	B,D
Fabia (5J)	05.07-10.14	14-18	6x15	21	ATS Antares G.Blk	38	43	10	1568,-	**OE-fit**	B,D
1.2TSI (77kW), 1.6TDI (77kW) 15"			6x15	29	CSP 13	38	43	10	1468,-	**OE-fit**	B,D
1.9TDi, RS (132kW) 15"			6x15	30	CSP 13 M.Gun	38	43	10	1468,-	**OE-fit**	B,D
Fabia (5J) Scout	07.09-10.14	15-18	6x15	45	Image Ride	38	43	10	1552,-	**OE-fit**	B,D
Praktik	06.03-04.15	14-18	6x15	48	Image Motion	38	43	10	1224,-	**OE-fit**	B,D
1.6TDI 15"			6x15	49	Image Motion G.Gun	38	43	10	1224,-	**OE-fit**	B,D
Roomster (5J)	09.06-04.15	14-18	6,5x16	29	CSP 13	35	43	16	1716,-	**OE-fit**	B,D
1.4TDI (59kW) 15"			6,5x16	30	CSP 13 M.Gun	35	43	16	1716,-	**OE-fit**	B,D
1.6i, 1.6TDI, 1.9TDI 15"			6,5x16	36	Image Colt	40	43	6	1624,-		
Roomster (5J) scout	05.07-04.15	15-18	6,5x16	48	Image Motion	38	43	10	1468,-	**OE-fit**	B,D
			6,5x16	49	Image Motion G.Gun	38	43	10	1468,-	**OE-fit**	B,D
			6,5x16	92	Image Colt L.Gun	40	43	6	1548,-		
			7x17	29	CSP 13	35	43	16	2152,-	**OE-fit**	B,D
			7x17	30	CSP 13 M.Gun	35	43	16	2152,-	**OE-fit**	B,D
			7,5x17	16	Advanti Inizio DST	42	43	2	3324,-	**OE-fit**	B,D
			8x18	16	Advanti Inizio DST	42	43	2	3828,-	**OE-fit**	B,D,M
SKODA			PCD: **5-100** Bolt - Mutter: **14x1,50B** CB: **57,1**								
Fabia (5J)	11.14-	14-18	5,5x14	45	Image Ride	38	46	16	1392,-	**OE-fit**	B,D
1.0TSI/1.2TSI (81kW) 15"			6x15	17	BM Drive M.Gun	38	46	16	1276,-	**OE-fit**	B,D
1.4TDI (77kW) 15"			6x15	20	ATS Antares	38	46	16	1496,-	**OE-fit**	B,D
			6x15	21	ATS Antares G.Blk	38	46	16	1568,-	**OE-fit**	B,D
			6x15	29	CSP 13	38	46	16	1468,-	**OE-fit**	B,D
			6x15	30	CSP 13 M.Gun	38	46	16	1468,-	**OE-fit**	B,D
			6x15	45	Image Ride	38	46	16	1552,-	**OE-fit**	B,D
			6x15	48	Image Motion	38	46	16	1224,-	**OE-fit**	B,D
			6x15	49	Image Motion G.Gun	38	46	16	1224,-	**OE-fit**	B,D
			6,5x16	29	CSP 13	45	46	2	1716,-	**OE-fit**	B,D
			6,5x16	30	CSP 13 M.Gun	45	46	2	1716,-	**OE-fit**	B,D
			6,5x16	36	Image Colt	40	46	12	1624,-		
			6,5x16	46	Image Stella	43	46	6	1548,-	**OE-fit**	B,D
			6,5x16	47	Image Stella M.Blk	43	46	6	1548,-	**OE-fit**	B,D
			6,5x16	48	Image Motion	38	46	16	1468,-	**OE-fit**	B,D
			6,5x16	49	Image Motion G.Gun	38	46	16	1468,-	**OE-fit**	B,D
			6,5x16	92	Image Colt L.Gun	40	46	12	1548,-		
			7x17	29	CSP 13	47	46	-2	2152,-	**OE-fit**	B,D
			7x17	30	CSP 13 M.Gun	47	46	-2	2152,-	**OE-fit**	B,D
			7x17	46	Image Stella	47	46	-2	1812,-	**OE-fit**	B,D
			7x17	47	Image Stella M.Blk	47	46	-2	1812,-	**OE-fit**	B,D
			7,5x17	16	Advanti Inizio DST	42	46	8	3324,-	**OE-fit**	B,D
			7,5x17	36	Image Colt	43	46	6	1956,-		
			7,5x17	92	Image Colt L.Gun	43	46	6	1876,-		
			8x18	16	Advanti Inizio DST	42	46	8	3828,-	**OE-fit**	B,D,M
SKODA			PCD: **5-100** Bolt - Mutter: **14x1,50B** CB: **57,1**								
Rapid (NH)	10.12-	14-18	5,5x14	45	Image Ride	38	46	16	1392,-	**OE-fit**	B,D
1.2TSI (77kW), 1.4TSI 15"			6x15	17	BM Drive M.Gun	38	46	16	1276,-		D
1.6, 1.6TDI 15"			6x15	29	CSP 13	38	46	16	1468,-	**OE-fit**	B,D
Rapid (NH) spaceback	10.13-	15-18	6x15	30	CSP 13 M.Gun	38	46	16	1468,-	**OE-fit**	B,D
			6x15	45	Image Ride	38	46	16	1552,-	**OE-fit**	B,D
			6x15	48	Image Motion	38	46	16	1224,-	**OE-fit**	B,D
			6x15	49	Image Motion G.Gun	38	46	16	1224,-	**OE-fit**	B,D

Forts. neste side »

Bilmerke - Bilmodell	Årsmodell	Dimensjon	Felgdim.	Bilde	Felgmodell	ET Felg	ET Bil	Avvik ET	Veil. Pris eks. MVA	Merknader	B,C D, M
SKODA (forts.)				PCD: **5-100** Bolt - Mutter: **14x1,50B** CB: **57,1**							
			6,5x16	29	CSP 13	45	46	2	1716,-	**OE-fit**	B,D
			6,5x16	30	CSP 13 M.Gun	45	46	2	1716,-	**OE-fit**	B,D
			6,5x16	36	Image Colt	40	46	12	1624,-		
			6,5x16	46	Image Stella	43	46	6	1548,-	**OE-fit**	B,D
			6,5x16	47	Image Stella M.Blk	43	46	6	1548,-	**OE-fit**	B,D
			6,5x16	92	Image Colt L.Gun	40	46	12	1548,-		
			7x17	29	CSP 13	47	46	-2	2152,-	**OE-fit**	B,D
			7x17	30	CSP 13 M.Gun	47	46	-2	2152,-	**OE-fit**	B,D
			7x17	46	Image Stella	47	46	-2	1812,-	**OE-fit**	B,D
			7x17	47	Image Stella M.Blk	47	46	-2	1812,-	**OE-fit**	B,D
			7,5x17	36	Image Colt	43	46	6	1956,-		
			7,5x17	92	Image Colt L.Gun	43	46	6	1876,-		
SKODA				PCD: **5-100** Bolt - Mutter: **14x1,50B** CB: **57,1**							
Scala (NW)	04.19-	15-19	6x15	17	BM Drive M.Gun	38	40	4	1276,-	**OE-fit**	B,D
1.0TSI (85kW), 1.5TSI 16"			6x15	20	ATS Antares	38	40	4	1496,-	**OE-fit**	B,D
1.6TDI 16"			6x15	21	ATS Antares G.Blk	38	40	4	1568,-	**OE-fit**	B,D
			6x15	29	CSP 13	38	40	4	1468,-	**OE-fit**	B,D
			6x15	30	CSP 13 M.Gun	38	40	4	1468,-	**OE-fit**	B,D
			6x15	48	Image Motion	38	40	4	1224,-	**OE-fit**	B,D
			6x15	49	Image Motion G.Gun	38	40	4	1224,-	**OE-fit**	B,D
			6,5x16	29	CSP 13	35	40	10	1716,-	**OE-fit**	B,D
			6,5x16	30	CSP 13 M.Gun	35	40	10	1716,-	**OE-fit**	B,D
			6,5x16	36	Image Colt	40	40	0	1624,-		
			6,5x16	48	Image Motion	38	40	4	1468,-	**OE-fit**	B,D
			6,5x16	49	Image Motion G.Gun	38	40	4	1468,-	**OE-fit**	B,D
			6,5x16	92	Image Colt L.Gun	40	40	0	1548,-		
			7x17	29	CSP 13	35	40	10	2152,-	**OE-fit**	B,D
			7x17	30	CSP 13 M.Gun	35	40	10	2152,-	**OE-fit**	B,D
			7,5x17	16	Advanti Inizio DST	42	40	-4	3324,-	**OE-fit**	B,D
			7,5x17	36	Image Colt	43	40	-6	1956,-		
			7,5x17	92	Image Colt L.Gun	43	40	-6	1876,-		
			8x18	16	Advanti Inizio DST	42	40	-4	3828,-	**OE-fit**	B,D,M
			8x19	16	Advanti Inizio DST	42	40	-4	4412,-	**OE-fit**	B,D,M
SKODA				PCD: **5-100** Bolt - Mutter: **14x1,50B** CB: **57,1**							
Octavia (1U) combi	04.97-05.04	14-19	5,5x14	45	Image Ride	38	38	0	1392,-	**OE-fit**	B,D
1.8, 1.8T, 1.9TDi, 2.0 15"			6x15	17	BM Drive M.Gun	38	38	0	1276,-		D
RS 16"			6x15	29	CSP 13	38	38	0	1468,-	**OE-fit**	B,D
Octavia (1U) sedan	04.97-05.04	14-19	6x15	30	CSP 13 M.Gun	38	38	0	1468,-	**OE-fit**	B,D
1.8, 1.8T, 1.9TDi, 2.0 15"			6x15	45	Image Ride	38	38	0	1552,-	**OE-fit**	B,D
RS 16"			6x15	48	Image Motion	38	38	0	1224,-	**OE-fit**	B,D
			6x15	49	Image Motion G.Gun	38	38	0	1224,-	**OE-fit**	B,D
			6,5x16	29	CSP 13	35	38	6	1716,-	**OE-fit**	B,D
			6,5x16	30	CSP 13 M.Gun	35	38	6	1716,-	**OE-fit**	B,D
			6,5x16	36	Image Colt	40	38	-4	1624,-		
			6,5x16	48	Image Motion	38	38	0	1468,-		D
			6,5x16	49	Image Motion G.Gun	38	38	0	1468,-		D
			6,5x16	92	Image Colt L.Gun	40	38	-4	1548,-		
			7x17	29	CSP 13	35	38	6	2152,-	**OE-fit**	B,D
			7x17	30	CSP 13 M.Gun	35	38	6	2152,-	**OE-fit**	B,D
SKODA				PCD: **5-112** Bolt - Mutter: **14x1,50B** CB: **57,1**							
Octavia (1Z) combi	06.04-05.13	15-20	6x15	17	BM Drive M.Gun	43	47	8	1276,-		D
RS 16"			6x15	20	ATS Antares	43	47	8	1496,-	**OE-fit**	B,D
Octavia (1Z) scout	03.07-03.13	16-20	6x15	21	ATS Antares G.Blk	43	47	8	1568,-	**OE-fit**	B,D
Octavia (1Z) sedan	06.04-12.12	15-20	6x15	29	CSP 13	43	47	8	1468,-	**OE-fit**	B,D
RS 16"			6x15	30	CSP 13 M.Gun	43	47	8	1468,-	**OE-fit**	B,D
Octavia (5E) combi	06.13-01.17	15-20	6x15	45	Image Ride	43	47	8	1552,-	**OE-fit**	B,D
1.4TSI, 1.8TSI, 2.0TDI 16"			6x15	48	Image Motion	43	47	8	1224,-	**OE-fit**	B,D
RS 17"			6x15	49	Image Motion G.Gun	43	47	8	1224,-	**OE-fit**	B,D
Octavia (5E) combi	02.17-02.20	16-20	6,5x16	20	ATS Antares	46	47	2	1852,-	**OE-fit**	B,D
(Facelift)			6,5x16	21	ATS Antares G.Blk	46	47	2	1896,-	**OE-fit**	B,D
Octavia (5E) scout	07.14-02.17	17-20	6,5x16	26	CSP 18 G.Blk/pol	46	47	2	1896,-		
Octavia (5E) scout	03.17-	17-20	6,5x16	27	CSP 18	46	47	2	1760,-		
Octavia (5E) sedan	01.13-01.17	15-20	6,5x16	28	CSP 18 G.Blk	46	47	2	1760,-		
1.4TSI, 1.8TSI, 2.0TDI 16"			6,5x16	29	CSP 13	46	47	2	1716,-	**OE-fit**	B,D
RS 17"			6,5x16	30	CSP 13 M.Gun	46	47	2	1716,-	**OE-fit**	B,D
Octavia (5E) sedan	02.17-02.20	16-20	6,5x16	36	Image Colt	45	47	4	1624,-		B
(Facelift)			6,5x16	40	Image Spirit	46	47	2	1264,-	**OE-fit**	B,D
Octavia (NX) combi	03.20-	16-20	6,5x16	46	Image Stella	46	47	2	1548,-	**OE-fit**	B,D
Octavia (NX) sedan	03.20-	16-20	6,5x16	47	Image Stella M.Blk	46	47	2	1548,-	**OE-fit**	B,D
Superb (3T)	08.08-04.15	16-20	6,5x16	48	Image Motion	46	47	2	1468,-	**OE-fit**	B,D
3.6 17"			6,5x16	49	Image Motion G.Gun	46	47	2	1468,-	**OE-fit**	B,D
Yeti (5L)	09.09-07.17	16-20	6,5x16	50	Image Legend	46	47	2	1544,-	**OE-fit**	B,D
			6,5x16	92	Image Colt L.Gun	45	47	4	1548,-		B
			7x16	17	BM Drive M.Gun	45	47	4	1476,-		D
			7x16	20	ATS Antares	48	47	-2	1852,-	**OE-fit**	B,D
			7x16	21	ATS Antares G.Blk	48	47	-2	1896,-	**OE-fit**	B,D
			7,5x16	20	ATS Antares	45	47	4	1852,-		B
			7,5x16	21	ATS Antares G.Blk	45	47	4	1896,-		B
			7x17	17	BM Drive M.Gun	45	47	4	1736,-		D
			7x17	20	ATS Antares	49	47	-4	2264,-	**OE-fit**	B,D
			7x17	21	ATS Antares G.Blk	49	47	-4	2380,-	**OE-fit**	B,D
			7x17	29	CSP 13	48	47	-2	2152,-	**OE-fit**	B,D
			7x17	30	CSP 13 M.Gun	48	47	-2	2152,-	**OE-fit**	B,D
			7x17	40	Image Spirit	46	47	2	1476,-	**OE-fit**	B,D
			7x17	46	Image Stella	46	47	2	1812,-	**OE-fit**	B,D

Forts. neste side »

Bilmerke - Bilmodell	Årsmodell	Dimensjon	Felgdim.	Bilde	Felgmodell	ET Felg	ET Bil	Avvik ET	Veil. Pris eks. MVA	Merknader	B,C D, M
SKODA (forts.)			PCD: **5-112** Bolt - Mutter: **14x1,50B**		CB: **57,1**						
			7x17	47	Image Stella M.Blk	46	47	2	1812,-	**OE-fit**	B,D
			7x17	48	Image Motion	45	47	4	1736,-	**OE-fit**	B,D
			7x17	49	Image Motion G.Gun	45	47	4	1736,-	**OE-fit**	B,D
			7,5x17	9	Nitro Sabre G.Blk	45	47	4	3052,-		B
			7,5x17	16	Advanti Inizio DST	42	47	10	3324,-		B
			7,5x17	20	ATS Antares	45	47	4	2264,-		B
			7,5x17	21	ATS Antares G.Blk	45	47	4	2380,-		B
			7,5x17	26	CSP 18 G.Blk/pol	52	47	-10	2272,-		
			7,5x17	27	CSP 18	52	47	-10	2200,-		
			7,5x17	28	CSP 18 G.Blk	52	47	-10	2200,-		
			7,5x17	36	Image Colt	45	47	4	1956,-		B
			7,5x17	50	Image Legend	45	47	4	1812,-	**OE-fit**	B,D
			7,5x17	92	Image Colt L.Gun	45	47	4	1876,-		B
			8x17	17	BM Drive M.Gun	45	47	4	1736,-		
			8x17	48	Image Motion	45	47	4	1736,-		B
			7,5x18	2	Nitro Sapphire FF	48	47	-2	3944,-		B
			7,5x18	29	CSP 13	51	47	-8	2932,-	**OE-fit**	B,D
			7,5x18	30	CSP 13 M.Gun	51	47	-8	2932,-	**OE-fit**	B,D
			7,5x18	46	Image Stella	48	47	-2	2276,-	**OE-fit**	B,D
			7,5x18	47	Image Stella M.Blk	48	47	-2	2276,-	**OE-fit**	B,D
			8x18	7	Nitro Spark G.Blk/Grey	45	47	4	3476,-		B
			8x18	8	Nitro Spark G.Blk/Red	45	47	4	3476,-		B
			8x18	9	Nitro Sabre G.Blk	45	47	4	3496,-		B
			8x18	10	Nitro Demon H.Slv	47	47	0	2972,-		B
			8x18	11	Nitro Demon	47	47	0	2784,-		B
			8x18	16	Advanti Inizio DST	45	47	4	3828,-		B
			8x18	17	BM Drive M.Gun	45	47	4	2296,-		
			8x18	26	CSP 18 G.Blk/pol	47	47	0	2956,-		
			8x18	27	CSP 18	47	47	0	2972,-		
			8x18	28	CSP 18 G.Blk	47	47	0	2972,-		
			8x18	29	CSP 13	48	47	-2	2932,-	**OE-fit**	B,D
			8x18	30	CSP 13 M.Gun	48	47	-2	2932,-	**OE-fit**	B,D
			8x18	36	Image Colt	45	47	4	2412,-		B
			8x18	48	Image Motion	44	47	6	2204,-	**OE-fit**	B,D
			8x18	49	Image Motion G.Gun	44	47	6	2204,-	**OE-fit**	B,D
			8x18	50	Image Legend	45	47	4	2276,-	**OE-fit**	B,D
			8x18	92	Image Colt L.Gun	45	47	4	2296,-		B
			7,5x19	2	Nitro Sapphire FF	48	47	-2	4572,-		B
			8x19	4	Nitro Turismo FF G.Gun/Pol	47	47	0	4644,-		
			8x19	10	Nitro Demon H.Slv	47	47	0	3624,-		B
			8x19	11	Nitro Demon	47	47	0	3376,-		B
			8x19	16	Advanti Inizio DST	45	47	4	4412,-		B
			8x19	26	CSP 18 G.Blk/pol	47	47	0	3596,-		
			8x19	27	CSP 18	47	47	0	3444,-		
			8x19	28	CSP 18 G.Blk	47	47	0	3444,-		
			8x19	29	CSP 13	48	47	-2	3404,-	**OE-fit**	B,D
			8x19	30	CSP 13 M.Gun	48	47	-2	3404,-	**OE-fit**	B,D
			8x19	48	Image Motion	44	47	6	2532,-	**OE-fit**	B,D
			8x19	49	Image Motion G.Gun	44	47	6	2532,-	**OE-fit**	B,D
			8,5x19	3	Nitro Turismo FF	43	47	8	4492,-		D
			8,5x19	4	Nitro Turismo FF G.Gun/Pol	43	47	8	4644,-		D
			8,5x19	5	Nitro Volcano G.Gun	45	47	4	4388,-		B
			8,5x19	6	Nitro Volcano	45	47	4	4632,-		B
			8,5x19	9	Nitro Sabre G.Blk	45	47	4	4292,-		B,M
			8,5x19	36	Image Colt	45	47	4	3028,-		B,M
			8,5x19	92	Image Colt L.Gun	45	47	4	2876,-		B,M
			8x20	2	Nitro Sapphire FF	48	47	-2	5096,-		B
			8x20	4	Nitro Turismo FF G.Gun/Pol	47	47	0	4964,-		
			8,5x20	3	Nitro Turismo FF	43	47	8	4812,-		
			8,5x20	4	Nitro Turismo FF G.Gun/Pol	43	47	8	4964,-		
			8,5x20	5	Nitro Volcano G.Gun	45	47	4	4824,-		B,M
			8,5x20	6	Nitro Volcano	45	47	4	5164,-		B,M
			8,5x20	7	Nitro Spark G.Blk/Grey	45	47	4	4660,-		B,M
			8,5x20	8	Nitro Spark G.Blk/Red	45	47	4	4660,-		B,M
			8,5x20	9	Nitro Sabre G.Blk	45	47	4	4800,-		B,M
			8,5x20	10	Nitro Demon H.Slv	45	47	4	4104,-		B,M
			8,5x20	11	Nitro Demon	45	47	4	3808,-		B,M
			8,5x20	36	Image Colt	45	47	4	3432,-		B,M
			8,5x20	92	Image Colt L.Gun	45	47	4	3276,-		B,M
SKODA			PCD: **5-112** Bolt - Mutter: **14x1,50B**		CB: **57,1**						
Superb (3T)	05.15-06.19	16-21	6,5x16	29	CSP 13	41	41	0	1716,-	**OE-fit**	B,D
2.0TSI (206kW) 17"			6,5x16	30	CSP 13 M.Gun	41	41	0	1716,-	**OE-fit**	B,D
Superb (3T)	07.19-	17-21	6,5x16	36	Image Colt	35	41	12	1624,-		B
2.0TSI (200kW) 18"			6,5x16	40	Image Spirit	41	41	0	1264,-	**OE-fit**	B,D
(Facelift)			6,5x16	46	Image Stella	41	41	0	1548,-	**OE-fit**	B,D
Superb (3T) combi	09.15-06.19	16-21	6,5x16	47	Image Stella M.Blk	41	41	0	1548,-	**OE-fit**	B,D
2.0TSI (206kW) 17"			6,5x16	48	Image Motion	41	41	0	1468,-	**OE-fit**	B,D
Superb (3T) combi	07.19-	17-21	6,5x16	50	Image Legend	41	41	0	1544,-	**OE-fit**	B,D
2.0TSI (200kW) 18"			6,5x16	92	Image Colt L.Gun	35	41	12	1548,-		B
(Facelift)			7x16	17	BM Drive M.Gun	38	41	6	1476,-		D
			7x16	50	Image Legend	35	41	12	1544,-		B
			7x17	17	BM Drive M.Gun	40	41	2	1736,-		D
			7x17	20	ATS Antares	40	41	2	2264,-	**OE-fit**	B,D
			7x17	21	ATS Antares G.Blk	40	41	2	2380,-	**OE-fit**	B,D
			7x17	29	CSP 13	40	41	2	2152,-	**OE-fit**	B,D
			7x17	30	CSP 13 M.Gun	40	41	2	2152,-	**OE-fit**	B,D

Forts. neste side »

Bilmerke - Bilmodell	Årsmodell	Dimensjon	Felgdim.	Bilde	Felgmodell	ET Felg	ET Bil	Avvik ET	Veil. Pris eks. MVA	Merknader	B,C D, M
SKODA (forts.)				PCD: **5-112** Bolt - Mutter: **14x1,50B**		CB: **57,1**					
			7x17	40	Image Spirit	40	41	2	1476,-	**OE-fit**	B,D
			7x17	46	Image Stella	40	41	2	1812,-	**OE-fit**	B,D
			7x17	47	Image Stella M.Blk	40	41	2	1812,-	**OE-fit**	B,D
			7x17	48	Image Motion	40	41	2	1736,-	**OE-fit**	B,D
			7x17	49	Image Motion G.Gun	40	41	2	1736,-	**OE-fit**	B,D
			7,5x17	16	Advanti Inizio DST	42	41	-2	3324,-		B
			7,5x17	36	Image Colt	35	41	12	1956,-		B
			7,5x17	46	Image Stella	35	41	12	1812,-		B
			7,5x17	47	Image Stella M.Blk	35	41	12	1812,-		B
			7,5x17	50	Image Legend	40	41	2	1812,-	**OE-fit**	B,D
			7,5x17	92	Image Colt L.Gun	35	41	12	1876,-		B
			8x17	9	Nitro Sabre G.Blk	35	41	12	3108,-		B
			8x17	17	BM Drive M.Gun	35	41	12	1736,-		B
			8x17	48	Image Motion	35	41	12	1736,-		B
			8x17	49	Image Motion G.Gun	35	41	12	1736,-		B
			7,5x18	29	CSP 13	35	41	12	2932,-	**OE-fit**	B,D
			7,5x18	30	CSP 13 M.Gun	35	41	12	2932,-	**OE-fit**	B,D
			8x18	2	Nitro Sapphire FF	39	41	4	4036,-		B
			8x18	7	Nitro Spark G.Blk/Grey	35	41	12	3476,-		B
			8x18	9	Nitro Sabre G.Blk	35	41	12	3496,-		B
			8x18	10	Nitro Demon H.Slv	40	41	2	2972,-		B
			8x18	11	Nitro Demon	40	41	2	2784,-		B
			8x18	16	Advanti Inizio DST	35	41	12	3828,-		B
			8x18	17	BM Drive M.Gun	40	41	2	2296,-		D
			8x18	20	ATS Antares	39	41	4	3056,-		B
			8x18	21	ATS Antares G.Blk	39	41	4	3136,-		B
			8x18	29	CSP 13	44	41	-6	2932,-	**OE-fit**	B,D
			8x18	30	CSP 13 M.Gun	44	41	-6	2932,-	**OE-fit**	B,D
			8x18	36	Image Colt	35	41	12	2412,-		B
			8x18	40	Image Spirit	40	41	2	1912,-	**OE-fit**	B,D
			8x18	46	Image Stella	40	41	2	2276,-	**OE-fit**	B,D
			8x18	47	Image Stella M.Blk	40	41	2	2276,-	**OE-fit**	B,D
			8x18	48	Image Motion	44	41	-6	2204,-	**OE-fit**	B,D
			8x18	49	Image Motion G.Gun	44	41	-6	2204,-	**OE-fit**	B,D
			8x18	50	Image Legend	40	41	2	2276,-	**OE-fit**	B,D
			8x18	92	Image Colt L.Gun	35	41	12	2296,-		B
			8x19	2	Nitro Sapphire FF	39	41	4	4684,-		B
			8x19	10	Nitro Demon H.Slv	40	41	2	3624,-		B
			8x19	16	Advanti Inizio DST	35	41	12	4412,-		B
			8x19	29	CSP 13	44	41	-6	3404,-	**OE-fit**	B,D
			8x19	30	CSP 13 M.Gun	44	41	-6	3404,-	**OE-fit**	B,D
			8x19	48	Image Motion	44	41	-6	2532,-	**OE-fit**	B,D
			8x19	49	Image Motion G.Gun	44	41	-6	2532,-	**OE-fit**	B,D
			8,5x19	2	Nitro Sapphire FF	40	41	2	4684,-		B
			8,5x19	3	Nitro Turismo FF	43	41	-4	4492,-		D
			8,5x19	4	Nitro Turismo FF G.Gun/Pol	43	41	-4	4644,-		D
			8,5x19	5	Nitro Volcano G.Gun	40	41	2	4388,-		B
			8,5x19	6	Nitro Volcano	40	41	2	4632,-		B
			8,5x19	36	Image Colt	35	41	12	3028,-		B
			8,5x19	92	Image Colt L.Gun	35	41	12	2876,-		B
			8,5x20	1	Nitro Throne FF	40	41	2	5060,-		M
			8,5x20	2	Nitro Sapphire FF	40	41	2	5216,-		B
			8,5x20	3	Nitro Turismo FF	43	41	-4	4812,-		
			8,5x20	4	Nitro Turismo FF G.Gun/Pol	43	41	-4	4964,-		
			8,5x20	5	Nitro Volcano G.Gun	45	41	-8	4824,-		B
			8,5x20	6	Nitro Volcano	45	41	-8	5164,-		B
			8,5x20	7	Nitro Spark G.Blk/Grey	35	41	12	4660,-		B
			8,5x20	10	Nitro Demon H.Slv	45	41	-8	4104,-		B
			8,5x20	11	Nitro Demon	45	41	-8	3808,-		B
			8,5x20	36	Image Colt	35	41	12	3432,-		B
			8,5x20	92	Image Colt L.Gun	35	41	12	3276,-		B
			9x20	5	Nitro Volcano G.Gun	40	41	2	4824,-		B,M
			9x20	6	Nitro Volcano	40	41	2	5164,-		B,M
			9x20	10	Nitro Demon H.Slv	40	41	2	4104,-		B,M
			9x20	11	Nitro Demon	40	41	2	3808,-		B,M
			9x20	12	Nitro Edge M.Blk	40	41	2	4220,-		M
			9x20	15	Nitro Magnum	40	41	2	4572,-		M
			9x21	5	Nitro Volcano G.Gun	40	41	2	5540,-		B,M
			9x21	6	Nitro Volcano	40	41	2	5996,-		B,M
SKODA				PCD: **5-112** Bolt - Mutter: **14x1,50B**		CB: **57,1**					
Superb (3U)	03.02-07.08	16-20	6,5x16	36	Image Colt	35	37	4	1624,-		B
			6,5x16	92	Image Colt L.Gun	35	37	4	1548,-		B
			7x16	17	BM Drive M.Gun	38	37	-2	1476,-		D
			7x16	40	Image Spirit	35	37	4	1264,-		B
			7x16	48	Image Motion	35	37	4	1468,-		B
			7x17	17	BM Drive M.Gun	40	37	-6	1736,-		D
			7x17	48	Image Motion	35	37	4	1736,-	**OE-fit**	B,D
			7x17	49	Image Motion G.Gun	40	37	-6	1736,-	**OE-fit**	B,D
			7,5x17	20	ATS Antares	37	37	0	2264,-		B
			7,5x17	21	ATS Antares G.Blk	37	37	0	2380,-		B
			7,5x17	46	Image Stella	35	37	4	1812,-		B
			7,5x17	47	Image Stella M.Blk	35	37	4	1812,-		B
			7,5x17	50	Image Legend	35	37	4	1812,-		B
			8x17	9	Nitro Sabre G.Blk	35	37	4	3108,-		B
			8x17	17	BM Drive M.Gun	35	37	4	1736,-		B
			8x17	48	Image Motion	35	37	4	1736,-		B

Forts. neste side »

Bilmerke - Bilmodell	Årsmodell	Dimensjon	Felgdim.	Bilde	Felgmodell	ET Felg	ET Bil	Avvik ET	Veil. Pris eks. MVA	Merknader	B,C D, M
SKODA (forts.)			PCD: **5-112** Bolt - Mutter: **14x1,50B** CB: **57,1**								
			8x17	49	Image Motion G.Gun	35	37	4	1736,-		B
			8x18	7	Nitro Spark G.Blk/Grey	35	37	4	3476,-		B
			8x18	9	Nitro Sabre G.Blk	35	37	4	3496,-		B
			8x18	10	Nitro Demon H.Slv	35	37	4	2972,-		B
			8x18	11	Nitro Demon	35	37	4	2784,-		B
			8x18	16	Advanti Inizio DST	35	37	4	3828,-		B
			8x18	17	BM Drive M.Gun	40	37	-6	2296,-		D
			8x18	48	Image Motion	35	37	4	2204,-		B
			8x18	49	Image Motion G.Gun	35	37	4	2204,-		B
			8x19	10	Nitro Demon H.Slv	35	37	4	3624,-		B
			8x19	11	Nitro Demon	35	37	4	3376,-		B
			8x19	16	Advanti Inizio DST	35	37	4	4412,-		B
			8x19	48	Image Motion	35	37	4	2532,-		B
			8x19	49	Image Motion G.Gun	35	37	4	2532,-		B
			8,5x19	5	Nitro Volcano G.Gun	40	37	-6	4388,-		B
			8,5x19	6	Nitro Volcano	40	37	-6	4632,-		B
			8,5x19	9	Nitro Sabre G.Blk	35	37	4	4292,-		B,M
			8,5x19	36	Image Colt	35	37	4	3028,-		B
			8,5x19	92	Image Colt L.Gun	35	37	4	2876,-		B
			8,5x20	1	Nitro Throne FF	40	37	-6	5060,-		
			8,5x20	7	Nitro Spark G.Blk/Grey	35	37	4	4660,-		B,M
			8,5x20	9	Nitro Sabre G.Blk	35	37	4	4800,-		B,M
			8,5x20	10	Nitro Demon H.Slv	38	37	-2	4104,-		B,M
			8,5x20	11	Nitro Demon	38	37	-2	3808,-		B,M
			8,5x20	36	Image Colt	35	37	4	3432,-		B
			8,5x20	92	Image Colt L.Gun	35	37	4	3276,-		B
			9x20	5	Nitro Volcano G.Gun	40	37	-6	4824,-		B,M
			9x20	6	Nitro Volcano	40	37	-6	5164,-		B,M
			9x20	10	Nitro Demon H.Slv	40	37	-6	4104,-		B,M
			9x20	11	Nitro Demon	40	37	-6	3808,-		B,M
			9x20	12	Nitro Edge M.Blk	40	37	-6	4220,-		M
SKODA			PCD: **5-100** Bolt - Mutter: **14x1,50B** CB: **57,1**								
Kamiq (NW)	10.19-	16-20	6,5x16	29	CSP 13	35	35	0	1716,-	**OE-fit**	B,D
			6,5x16	30	CSP 13 M.Gun	35	35	0	1716,-	**OE-fit**	B,D
			6,5x16	36	Image Colt	40	35	-10	1624,-		
			6,5x16	48	Image Motion	38	35	-6	1468,-	**OE-fit**	B,D
			6,5x16	49	Image Motion G.Gun	38	35	-6	1468,-	**OE-fit**	B,D
			6,5x16	92	Image Colt L.Gun	40	35	-10	1548,-		
			7x17	29	CSP 13	35	35	0	2152,-	**OE-fit**	B,D
			7x17	30	CSP 13 M.Gun	35	35	0	2152,-	**OE-fit**	B,D
			7,5x17	16	Advanti Inizio DST	42	35	-14	3324,-	**OE-fit**	B,D
			8x18	16	Advanti Inizio DST	42	35	-14	3828,-	**OE-fit**	B,D,M
			8x19	16	Advanti Inizio DST	42	35	-14	4412,-	**OE-fit**	B,D,M
SKODA			PCD: **5-112** Bolt - Mutter: **14x1,50B** CB: **57,1**								
Karoq (NU)	08.17-	16-20	6,5x16	20	ATS Antares	41	45	8	1852,-	**OE-fit**	B,D
4wd 17"			6,5x16	21	ATS Antares G.Blk	41	45	8	1896,-	**OE-fit**	B,D
			6,5x16	29	CSP 13	41	45	8	1716,-	**OE-fit**	B,D
			6,5x16	30	CSP 13 M.Gun	41	45	8	1716,-	**OE-fit**	B,D
			6,5x16	36	Image Colt	45	45	0	1624,-		B
			6,5x16	40	Image Spirit	41	45	8	1264,-	**OE-fit**	B,D
			6,5x16	46	Image Stella	41	45	8	1548,-	**OE-fit**	B,D
			6,5x16	47	Image Stella M.Blk	41	45	8	1548,-	**OE-fit**	B,D
			6,5x16	48	Image Motion	41	45	8	1468,-	**OE-fit**	B,D
			6,5x16	50	Image Legend	41	45	8	1544,-	**OE-fit**	B,D
			6,5x16	92	Image Colt L.Gun	45	45	0	1548,-		B
			7x16	17	BM Drive M.Gun	45	45	0	1476,-	**OE-fit**	B,D
			7x16	50	Image Legend	45	45	0	1544,-		B
			7x17	17	BM Drive M.Gun	45	45	0	1736,-	**OE-fit**	B,D
			7x17	20	ATS Antares	40	45	10	2264,-	**OE-fit**	B,D
			7x17	21	ATS Antares G.Blk	40	45	10	2380,-	**OE-fit**	B,D
			7x17	29	CSP 13	40	45	10	2152,-	**OE-fit**	B,D
			7x17	30	CSP 13 M.Gun	40	45	10	2152,-	**OE-fit**	B,D
			7x17	40	Image Spirit	40	45	10	1476,-	**OE-fit**	B,D
			7x17	46	Image Stella	40	45	10	1812,-	**OE-fit**	B,D
			7x17	47	Image Stella M.Blk	40	45	10	1812,-	**OE-fit**	B,D
			7x17	48	Image Motion	45	45	0	1736,-	**OE-fit**	B,D
			7x17	49	Image Motion G.Gun	45	45	0	1736,-	**OE-fit**	B,D
			7,5x17	9	Nitro Sabre G.Blk	45	45	0	3052,-		B
			7,5x17	16	Advanti Inizio DST	42	45	6	3324,-		B
			7,5x17	20	ATS Antares	45	45	0	2264,-		B
			7,5x17	21	ATS Antares G.Blk	45	45	0	2380,-		B
			7,5x17	36	Image Colt	45	45	0	1956,-		B
			7,5x17	50	Image Legend	45	45	0	1812,-	**OE-fit**	B,D
			7,5x17	92	Image Colt L.Gun	45	45	0	1876,-		B
			8x17	17	BM Drive M.Gun	45	45	0	1736,-		B
			8x17	48	Image Motion	45	45	0	1736,-		B
			8x18	7	Nitro Spark G.Blk/Grey	45	45	0	3476,-		B
			8x18	8	Nitro Spark G.Blk/Red	45	45	0	3476,-		B
			8x18	9	Nitro Sabre G.Blk	45	45	0	3496,-		B
			8x18	10	Nitro Demon H.Slv	40	45	10	2972,-		B
			8x18	11	Nitro Demon	40	45	10	2784,-		B
			8x18	16	Advanti Inizio DST	45	45	0	3828,-		B
			8x18	17	BM Drive M.Gun	40	45	10	2296,-	**OE-fit**	B,D
			8x18	20	ATS Antares	40	45	10	3056,-		B
			8x18	21	ATS Antares G.Blk	40	45	10	3136,-		B
			8x18	29	CSP 13	44	45	2	2932,-	**OE-fit**	B,D

Forts. neste side »

Bilmerke - Bilmodell	Årsmodell	Dimensjon	Felgdim.	Bilde	Felgmodell	ET Felg	ET Bil	Avvik ET	Veil. Pris eks. MVA	Merknader	B,C D, M
SKODA (forts.)				PCD: **5-112** Bolt - Mutter: **14x1,50B**		CB: **57,1**					
			8x18	30	CSP 13 M.Gun	44	45	2	2932,-	**OE-fit**	B,D
			8x18	36	Image Colt	45	45	0	2412,-		B
			8x18	40	Image Spirit	40	45	10	1912,-	**OE-fit**	B,D
			8x18	46	Image Stella	40	45	10	2276,-	**OE-fit**	B,D
			8x18	47	Image Stella M.Blk	40	45	10	2276,-	**OE-fit**	B,D
			8x18	48	Image Motion	44	45	2	2204,-	**OE-fit**	B,D
			8x18	49	Image Motion G.Gun	44	45	2	2204,-	**OE-fit**	B,D
			8x18	50	Image Legend	45	45	0	2276,-	**OE-fit**	B,D
			8x18	92	Image Colt L.Gun	45	45	0	2296,-		B
			8x19	10	Nitro Demon H.Slv	40	45	10	3624,-		B
			8x19	16	Advanti Inizio DST	45	45	0	4412,-		B
			8x19	29	CSP 13	44	45	2	3404,-	**OE-fit**	B,D
			8x19	30	CSP 13 M.Gun	44	45	2	3404,-	**OE-fit**	B,D
			8x19	48	Image Motion	44	45	2	2532,-	**OE-fit**	B,D
			8x19	49	Image Motion G.Gun	44	45	2	2532,-	**OE-fit**	B,D
			8,5x19	3	Nitro Turismo FF	43	45	4	4492,-		D
			8,5x19	4	Nitro Turismo FF G.Gun/Pol	43	45	4	4644,-		D
			8,5x19	5	Nitro Volcano G.Gun	45	45	0	4388,-		
			8,5x19	6	Nitro Volcano	45	45	0	4632,-		
			8,5x19	9	Nitro Sabre G.Blk	45	45	0	4292,-		B
			8,5x19	36	Image Colt	45	45	0	3028,-		B
			8,5x19	92	Image Colt L.Gun	45	45	0	2876,-		B
			8,5x20	1	Nitro Throne FF	40	45	10	5060,-		M
			8,5x20	3	Nitro Turismo FF	43	45	4	4812,-		
			8,5x20	4	Nitro Turismo FF G.Gun/Pol	43	45	4	4964,-		
			8,5x20	5	Nitro Volcano G.Gun	45	45	0	4824,-		B
			8,5x20	6	Nitro Volcano	45	45	0	5164,-		B
			8,5x20	7	Nitro Spark G.Blk/Grey	45	45	0	4660,-		B
			8,5x20	8	Nitro Spark G.Blk/Red	45	45	0	4660,-		B
			8,5x20	9	Nitro Sabre G.Blk	45	45	0	4800,-		B
			8,5x20	10	Nitro Demon H.Slv	45	45	0	4104,-		B
			8,5x20	11	Nitro Demon	45	45	0	3808,-		B
			8,5x20	36	Image Colt	45	45	0	3432,-		B
			8,5x20	92	Image Colt L.Gun	45	45	0	3276,-		B
SKODA				PCD: **5-112** Bolt - Mutter: **14x1,50B**		CB: **57,1**					
Kodiaq (NS)	01.17-	17-22	7x17	17	BM Drive M.Gun	40	40	0	1736,-		D
			7x17	20	ATS Antares	40	40	0	2264,-	**OE-fit**	B,D
			7x17	21	ATS Antares G.Blk	40	40	0	2380,-	**OE-fit**	B,D
			7x17	29	CSP 13	40	40	0	2152,-	**OE-fit**	B,D
			7x17	30	CSP 13 M.Gun	40	40	0	2152,-	**OE-fit**	B,D
			7x17	40	Image Spirit	40	40	0	1476,-	**OE-fit**	B,D
			7x17	46	Image Stella	40	40	0	1812,-	**OE-fit**	B,D
			7x17	47	Image Stella M.Blk	40	40	0	1812,-	**OE-fit**	B,D
			7x17	48	Image Motion	40	40	0	1736,-	**OE-fit**	B,D
			7x17	49	Image Motion G.Gun	40	40	0	1736,-	**OE-fit**	B,D
			7,5x17	16	Advanti Inizio DST	42	40	-4	3324,-		B
			7,5x17	36	Image Colt	35	40	10	1956,-		B
			7,5x17	46	Image Stella	35	40	10	1812,-		B
			7,5x17	47	Image Stella M.Blk	35	40	10	1812,-		B
			7,5x17	50	Image Legend	40	40	0	1812,-	**OE-fit**	B,D
			7,5x17	92	Image Colt L.Gun	35	40	10	1876,-		B
			8x17	9	Nitro Sabre G.Blk	35	40	10	3108,-		B
			8x17	17	BM Drive M.Gun	35	40	10	1736,-		B
			8x17	48	Image Motion	35	40	10	1736,-		B
			8x17	49	Image Motion G.Gun	35	40	10	1736,-		B
			7,5x18	29	CSP 13	35	40	10	2932,-	**OE-fit**	B,D
			7,5x18	30	CSP 13 M.Gun	35	40	10	2932,-	**OE-fit**	B,D
			8x18	2	Nitro Sapphire FF	39	40	2	4036,-		B
			8x18	7	Nitro Spark G.Blk/Grey	35	40	10	3476,-		B
			8x18	9	Nitro Sabre G.Blk	35	40	10	3496,-		B
			8x18	10	Nitro Demon H.Slv	40	40	0	2972,-		B
			8x18	11	Nitro Demon	40	40	0	2784,-		B
			8x18	16	Advanti Inizio DST	35	40	10	3828,-		B
			8x18	17	BM Drive M.Gun	40	40	0	2296,-		D
			8x18	20	ATS Antares	40	40	0	3056,-		B
			8x18	21	ATS Antares G.Blk	40	40	0	3136,-		B
			8x18	29	CSP 13	40	40	0	2932,-	**OE-fit**	B,D
			8x18	30	CSP 13 M.Gun	40	40	0	2932,-	**OE-fit**	B,D
			8x18	36	Image Colt	35	40	10	2412,-		B
			8x18	40	Image Spirit	40	40	0	1912,-	**OE-fit**	B,D
			8x18	46	Image Stella	40	40	0	2276,-	**OE-fit**	B,D
			8x18	47	Image Stella M.Blk	40	40	0	2276,-	**OE-fit**	B,D
			8x18	48	Image Motion	44	40	-8	2204,-	**OE-fit**	B,D
			8x18	49	Image Motion G.Gun	44	40	-8	2204,-	**OE-fit**	B,D
			8x18	50	Image Legend	40	40	0	2276,-	**OE-fit**	B,D
			8x18	92	Image Colt L.Gun	35	40	10	2296,-		B
			8,5x18	16	Advanti Inizio DST	35	40	10	3828,-		B
			8x19	2	Nitro Sapphire FF	39	40	2	4684,-		B
			8x19	3	Nitro Turismo FF	30	40	20	4492,-		
			8x19	4	Nitro Turismo FF G.Gun/Pol	30	40	20	4644,-		
			8x19	10	Nitro Demon H.Slv	40	40	0	3624,-		B
			8x19	16	Advanti Inizio DST	35	40	10	4412,-		B
			8x19	29	CSP 13	40	40	0	3404,-	**OE-fit**	B,D
			8x19	30	CSP 13 M.Gun	40	40	0	3404,-	**OE-fit**	B,D
			8x19	48	Image Motion	44	40	-8	2532,-	**OE-fit**	B,D
			8x19	49	Image Motion G.Gun	44	40	-8	2532,-	**OE-fit**	B,D

Forts. neste side »

Bilmerke - Bilmodell	Årsmodell	Dimensjon	Felgdim.	Bilde	Felgmodell	ET Felg	ET Bil	Avvik ET	Veil. Pris eks. MVA	Merknader	B,C D, M
SKODA (forts.)				PCD: **5-112**	Bolt - Mutter: **14x1,50B**	CB: **57,1**					
			8,5x19	2	Nitro Sapphire FF	40	40	0	4684,-		B
			8,5x19	3	Nitro Turismo FF	35	40	10	4492,-		
			8,5x19	4	Nitro Turismo FF G.Gun/Pol	35	40	10	4644,-		
			8,5x19	5	Nitro Volcano G.Gun	32	40	16	4388,-		
			8,5x19	6	Nitro Volcano	32	40	16	4632,-		
			8,5x19	9	Nitro Sabre G.Blk	35	40	10	4292,-		B
			8,5x19	16	Advanti Inizio DST	35	40	10	4412,-		B
			8,5x19	36	Image Colt	35	40	10	3028,-		B
			8,5x19	92	Image Colt L.Gun	35	40	10	2876,-		B
			8,5x20	1	Nitro Throne FF	40	40	0	5060,-		
			8,5x20	2	Nitro Sapphire FF	40	40	0	5216,-		B
			8,5x20	3	Nitro Turismo FF	35	40	10	4812,-		
			8,5x20	4	Nitro Turismo FF G.Gun/Pol	35	40	10	4964,-		
			8,5x20	7	Nitro Spark G.Blk/Grey	35	40	10	4660,-		B
			8,5x20	9	Nitro Sabre G.Blk	35	40	10	4800,-		B
			8,5x20	10	Nitro Demon H.Slv	38	40	4	4104,-		B
			8,5x20	11	Nitro Demon	38	40	4	3808,-		B
			8,5x20	36	Image Colt	35	40	10	3432,-		B
			8,5x20	92	Image Colt L.Gun	35	40	10	3276,-		B
			9x20	1	Nitro Throne FF	35	40	10	5060,-		
			9x20	3	Nitro Turismo FF	30	40	20	4960,-		M
			9x20	4	Nitro Turismo FF G.Gun/Pol	30	40	20	5048,-		M
			9x20	5	Nitro Volcano G.Gun	32	40	16	4824,-		B
			9x20	6	Nitro Volcano	32	40	16	5164,-		B
			9x20	10	Nitro Demon H.Slv	40	40	0	4104,-		B
			9x20	11	Nitro Demon	40	40	0	3808,-		B
			9x20	15	Nitro Magnum	35	40	10	4572,-		
			9x21	5	Nitro Volcano G.Gun	32	40	16	5540,-		B
			9x21	6	Nitro Volcano	32	40	16	5996,-		B
			9x22	12	Nitro Edge M.Blk	40	40	0	4888,-		
			9x22	15	Nitro Magnum	35	40	10	5420,-		
SMART				PCD: **4-100**	Bolt - Mutter: **12x1,50B**	CB: **60,1**					
Forfour (451)	11.14-	15-18	6x15	19	ATS Streetrallye Slv	38	32	-12	1960,-		
ForTwo (451)	11.14-	15-17	6x15	34	CSP 16	40	32	-16	1228,-	**OE-fit**	B,D
			6,5x16	19	ATS Streetrallye Slv	40	32	-16	2240,-		
			6,5x16	34	CSP 16	40	32	-16	1468,-		D
			6,5x16	42	Image Brio	38	32	-12	1524,-		
			7x17	42	Image Brio	40	32	-16	1832,-		
SMART				PCD: **4-114,3**	Bolt - Mutter: **12x1,50**	CB: **67,1**					
Forfour	04.04-07.06	14-18	6x15	37	Image Comet	40	46	12	1316,-		D
			6x15	38	Image Comet Slv	40	46	12	1316,-		D
			6x16	37	Image Comet	40	46	12	1536,-		
SSANG YONG				PCD: **5-112**	Bolt - Mutter: **12x1,50B**	CB: **66,5**					
Korando (CK)	12.10-	16-20	6,5x16	36	Image Colt	45	45	0	1624,-		D
Tivoli (XK)	07.15-	16-20	6,5x16	92	Image Colt L.Gun	45	45	0	1548,-		D
XLV (XK)	09.16-	16-20	7x16	17	BM Drive M.Gun	45	45	0	1476,-		D
			7,5x17	9	Nitro Sabre G.Blk	45	45	0	3052,-		D
			7,5x17	92	Image Colt L.Gun	45	45	0	1876,-		D
			8x17	17	BM Drive M.Gun	45	45	0	1736,-		D
			8x17	48	Image Motion	45	45	0	1736,-		D
			8x18	7	Nitro Spark G.Blk/Grey	45	45	0	3476,-		D
			8x18	9	Nitro Sabre G.Blk	45	45	0	3496,-		D
			8x18	16	Advanti Inizio DST	45	45	0	3828,-		D
			8x18	17	BM Drive M.Gun	45	45	0	2296,-		D
			8x18	36	Image Colt	45	45	0	2412,-		D
			8x18	48	Image Motion	45	45	0	2204,-		D
			8x18	92	Image Colt L.Gun	45	45	0	2296,-		D
			8x19	16	Advanti Inizio DST	45	45	0	4412,-		D
			8x19	48	Image Motion	45	45	0	2532,-		D
			8,5x19	3	Nitro Turismo FF	43	45	4	4492,-		
			8,5x19	4	Nitro Turismo FF G.Gun/Pol	43	45	4	4644,-		
			8,5x19	9	Nitro Sabre G.Blk	45	45	0	4292,-		D,M
			8,5x20	7	Nitro Spark G.Blk/Grey	45	45	0	4660,-		D,M
			8,5x20	8	Nitro Spark G.Blk/Red	45	45	0	4660,-		D,M
			8,5x20	9	Nitro Sabre G.Blk	45	45	0	4800,-		D,M
			8,5x20	10	Nitro Demon H.Slv	45	45	0	4104,-		D,M
			8,5x20	11	Nitro Demon	45	45	0	3808,-		D,M
SSANG YONG				PCD: **5-130**	Bolt - Mutter: **14x1,50**	CB: **84,1**					
Actyon (QJ)	01.06-	16-20	7x16	65	CSP Work	40	43	6	2556,-	Maks bel. 955 kg	D
Kyron	01.06-	16-20	8x18	68	BM Macho	45	43	-4	3300,-		D
Rexton (RJ) II	02.06-06.12	16-20	8x18	69	BM Macho M.Blk	45	43	-4	3300,-		D
Rexton (RJ) W	07.12-02.17	16-20									
Rodius (AJ)	10.05-02.13	16-20									
(bult 14x1.50)											
Rodius (AJ) II	02.13-	16-20									
SSANG YONG				PCD: **5-130**	Bolt - Mutter: **14x1,50**	CB: **84,1**					
Musso (QK)	04.18-	17-22	8x18	68	BM Macho	45	43	-4	3300,-		D
Rexton (YK)	03.17-	17-22	8x18	69	BM Macho M.Blk	45	43	-4	3300,-		D
SSANG YONG				PCD: **6-139,7**	Bolt - Mutter: **12x1,50**	CB: **102,0**					
Rexton	01.01-08.06	16-20	8x16	78	Advanti Peak	5	43	76	2692,-		M
SSANG YONG				PCD: **6-139,7**	Bolt - Mutter: **12x1,50**	CB: **110,0**					
Korando	02.97-12.01	15-18	8x16	78	Advanti Peak	5	15	20	2692,-		D
Musso	03.93-12.05	15-18									

Bilmerke - Bilmodell	Årsmodell	Dimensjon	Felgdim.	Bilde	Felgmodell	ET Felg	ET Bil	Avvik ET	Veil. Pris eks. MVA	Merknader	B,C D, M
SUBARU				PCD: **4-100** Bolt - Mutter: **12x1,50** CB: **54,1**							
Justy	09.06-02.11	13-16	5x13	45	Image Ride	38	40	4	1336,-		
			5,5x14	45	Image Ride	38	40	4	1392,-		
			6x15	19	ATS Streetrallye Slv	38	40	4	1960,-		
			6x15	42	Image Brio	40	40	0	1304,-		
			6x15	45	Image Ride	38	40	4	1552,-		
			6,5x16	42	Image Brio	38	40	4	1524,-		
SUBARU				PCD: **5-100** Bolt - Mutter: **12x1,50** CB: **54,1**							
Trezia (D1)	03.11-	15-19	6x15	48	Image Motion	40	45	10	1224,-		
			6,5x16	36	Image Colt	40	45	10	1624,-		
			6,5x16	92	Image Colt L.Gun	40	45	10	1548,-		
SUBARU				PCD: **5-100** Bolt - Mutter: **12x1,25** CB: **56,1**							
BRZ (ZC)	03.12-	16-20	6,5x16	36	Image Colt	40	48	16	1624,-		
			6,5x16	92	Image Colt L.Gun	40	48	16	1548,-		
			7x17	34	CSP 16	48	48	0	1836,-	**OE-fit**, OE-mutter styrning/bricka	B,D
			7,5x17	36	Image Colt	43	48	10	1956,-		
			7,5x17	92	Image Colt L.Gun	43	48	10	1876,-		
SUBARU				PCD: **5-100** Bolt - Mutter: **12x1,25** CB: **56,1**							
Forester	05.97-12.02	15-19	6x15	48	Image Motion	40	55	30	1224,-		
Forester (SG)	01.03-02.08	16-19	7x17	34	CSP 16	48	55	14	1836,-		D
2.5XT 17"			7,5x17	36	Image Colt	43	55	24	1956,-		
Forester (SH)	03.08-01.13	16-20	7,5x17	92	Image Colt L.Gun	43	55	24	1876,-		
Forester (SJ)	02.13-12.18	17-20									
(Kun biler med 16" orig.											
kan ha 16", andre 17")											
Impreza	05.93-12.00	14-18									
Turbo 98-01 16"											
Impreza (G3)	09.07-12.12	15-19									
2.0R 16"											
WRX 17"											
Impreza (G4)	01.13-10.17	15-20									
Impreza (G5)	11.17-	16-20									
Impreza (G5) e-Boxer	11.19-	17-20									
Impreza (GD)	01.01-08.07	14-19									
WRX 16"											
Legacy	10.89-10.98	14-18									
Legacy	11.98-08.03	15-19									
Legacy (BL)	09.03-09.09	16-19									
2.0D, 3.0R 17"											
Legacy (BM)	10.09-09.14	16-20									
(Kun biler med 16" orig.											
kan ha 16", andre 17")											
Outback	09.98-12.03	15-19									
Outback (BL)	01.04-09.09	16-19									
2.0D, 3.0R 17"											
Outback (BM)	10.09-12.14	16-20									
(Kun biler med 16" orig.											
kan ha 16", andre 17")											
XV (G4)	09.11-08.17	16-20									
Kun biler med 16" orig.											
kan ha 16".											
XV (G5)	09.17-	17-20									
XV (G5) e-Boxer	11.19-	17-20									
SUBARU				PCD: **5-114,3** Bolt - Mutter: **12x1,25** CB: **56,1**							
Forester (S5) e-Boxer	09.19-	17-21	7x17	34	CSP 16	45	48	6	1836,-		B
			7x17	40	Image Spirit	45	48	6	1476,-		
			7x17	46	Image Stella	48	48	0	1812,-	**OE-fit**	B,D
			7x17	47	Image Stella M.Blk	48	48	0	1812,-	**OE-fit**	B,D
			7x17	48	Image Motion	45	48	6	1736,-		
			7x17	49	Image Motion G.Gun	45	48	6	1736,-		
			7,5x17	9	Nitro Sabre G.Blk	45	48	6	3052,-		
			7,5x17	36	Image Colt	45	48	6	1956,-		
			7,5x17	50	Image Legend	45	48	6	1812,-		
			7,5x17	92	Image Colt L.Gun	45	48	6	1876,-		
			7,5x18	2	Nitro Sapphire FF	45	48	6	3944,-		
			7,5x18	34	CSP 16	45	48	6	2444,-		B
			7,5x18	35	CSP 16 M.Gun	45	48	6	2444,-		B
			7,5x18	46	Image Stella	48	48	0	2276,-	**OE-fit**	B,D
			7,5x18	47	Image Stella M.Blk	48	48	0	2276,-	**OE-fit**	B,D
			8x18	7	Nitro Spark G.Blk/Grey	45	48	6	3476,-		
			8x18	8	Nitro Spark G.Blk/Red	45	48	6	3476,-		
			8x18	9	Nitro Sabre G.Blk	45	48	6	3496,-		
			8x18	16	Advanti Inizio DST	45	48	6	3828,-		
			8x18	36	Image Colt	45	48	6	2412,-		
			8x18	48	Image Motion	45	48	6	2204,-		
			8x18	49	Image Motion G.Gun	45	48	6	2204,-		
			8x18	50	Image Legend	45	48	6	2276,-		
			8x18	92	Image Colt L.Gun	45	48	6	2296,-		
			7,5x19	2	Nitro Sapphire FF	45	48	6	4572,-		
			8x19	16	Advanti Inizio DST	45	48	6	4412,-		
			8,5x19	5	Nitro Volcano G.Gun	45	48	6	4388,-		
			8,5x19	6	Nitro Volcano	45	48	6	4632,-		
			8,5x19	9	Nitro Sabre G.Blk	45	48	6	4292,-		
			8,5x19	36	Image Colt	45	48	6	3028,-		
			8,5x19	92	Image Colt L.Gun	45	48	6	2876,-		
			8x20	2	Nitro Sapphire FF	45	48	6	5096,-		

Forts. neste side »

Bilmerke - Bilmodell	Årsmodell	Dimensjon	Felgdim.	Bilde	Felgmodell	ET Felg	ET Bil	Avvik ET	Veil. Pris eks. MVA	Merknader	B,C D, M
SUBARU (forts.)			PCD: **5-114,3** Bolt - Mutter: **12x1,25** CB: **56,1**								
			8,5x20	5	Nitro Volcano G.Gun	45	48	6	4824,-		
			8,5x20	6	Nitro Volcano	45	48	6	5164,-		
			8,5x20	7	Nitro Spark G.Blk/Grey	45	48	6	4660,-		
			8,5x20	8	Nitro Spark G.Blk/Red	45	48	6	4660,-		
			8,5x20	9	Nitro Sabre G.Blk	45	48	6	4800,-		
			8,5x20	36	Image Colt	45	48	6	3432,-		
			8,5x20	92	Image Colt L.Gun	45	48	6	3276,-		
			9x21	5	Nitro Volcano G.Gun	45	48	6	5540,-		M
			9x21	6	Nitro Volcano	45	48	6	5996,-		M
SUBARU			PCD: **5-114,3** Bolt - Mutter: **12x1,25** CB: **56,1**								
Levorg (V1)	02.15-	17-20	7x17	34	CSP 16	55	55	0	1836,-	**OE-fit**	B,D
Outback (B6)	01.15-	17-20	7x17	35	CSP 16 M.Gun	55	55	0	1836,-	**OE-fit**	B,D
			7x17	40	Image Spirit	45	55	20	1476,-		B
			7x17	46	Image Stella	50	55	10	1812,-		
			7x17	47	Image Stella M.Blk	50	55	10	1812,-		
			7x17	48	Image Motion	50	55	10	1736,-		D
			7,5x17	9	Nitro Sabre G.Blk	45	55	20	3052,-		
			7,5x17	36	Image Colt	45	55	20	1956,-		
			7,5x17	92	Image Colt L.Gun	45	55	20	1876,-		
			7,5x18	2	Nitro Sapphire FF	45	55	20	3944,-		
			7,5x18	34	CSP 16	55	55	0	2444,-	**OE-fit**	B,D
			7,5x18	35	CSP 16 M.Gun	55	55	0	2444,-	**OE-fit**	B,D
			7,5x18	46	Image Stella	48	55	14	2276,-	**OE-fit**	B,D
			7,5x18	47	Image Stella M.Blk	48	55	14	2276,-	**OE-fit**	B,D
			8x18	9	Nitro Sabre G.Blk	45	55	20	3496,-		
			8x18	16	Advanti Inizio DST	45	55	20	3828,-		
			8x18	36	Image Colt	45	55	20	2412,-		
			8x18	48	Image Motion	45	55	20	2204,-		
			8x18	49	Image Motion G.Gun	45	55	20	2204,-		
			8x18	92	Image Colt L.Gun	45	55	20	2296,-		
			7,5x19	2	Nitro Sapphire FF	45	55	20	4572,-		
			8x19	16	Advanti Inizio DST	45	55	20	4412,-		
			8,5x19	5	Nitro Volcano G.Gun	45	55	20	4388,-		M
			8,5x19	6	Nitro Volcano	45	55	20	4632,-		M
			8,5x19	9	Nitro Sabre G.Blk	45	55	20	4292,-		M
			8,5x19	36	Image Colt	45	55	20	3028,-		M
			8,5x19	92	Image Colt L.Gun	45	55	20	2876,-		M
			8x20	2	Nitro Sapphire FF	45	55	20	5096,-		
			8,5x20	5	Nitro Volcano G.Gun	45	55	20	4824,-		M
			8,5x20	6	Nitro Volcano	45	55	20	5164,-		M
			8,5x20	9	Nitro Sabre G.Blk	45	55	20	4800,-		M
			8,5x20	36	Image Colt	45	55	20	3432,-		M
			8,5x20	92	Image Colt L.Gun	45	55	20	3276,-		M
SUBARU			PCD: **5-114,3** Bolt - Mutter: **12x1,25** CB: **56,1**								
Impreza WRX Sti	11.07-08.10	17-20	9x19	11	Nitro Demon	45	55	20	3376,-		M
STI (G3) Racing	09.10-11.13	17-20									
WRX (V1) STI	12.13-	18-20									
SUZUKI			PCD: **4-100** Bolt - Mutter: **12x1,50B** CB: **54,1**								
Splash (EX)	04.08-09.14	14-18	5,5x14	37	Image Comet	45	45	0	1264,-		D
Swift (MZ)	05.05-08.10	14-18	5,5x14	45	Image Ride	38	45	14	1392,-		
			6x15	19	ATS Streetrallye Slv	38	45	14	1960,-		
			6x15	42	Image Brio	40	45	10	1304,-		
			6x15	45	Image Ride	38	45	14	1552,-		
			6x16	37	Image Comet	40	45	10	1536,-		
			6x16	38	Image Comet Slv	40	45	10	1536,-		
			6,5x16	34	CSP 16	40	45	10	1468,-		
			6,5x16	42	Image Brio	38	45	14	1524,-		M
			7x17	18	ATS Streetrallye Blk	45	45	0	3344,-		
			7x17	42	Image Brio	40	45	10	1832,-		M
SUZUKI			PCD: **4-100** Bolt - Mutter: **12x1,25** CB: **54,1**								
Baleno	01.95-06.02	13-18	5x13	45	Image Ride	38	45	14	1336,-		
Ignis	08.00-08.03	14-15	5,5x14	37	Image Comet	45	45	0	1264,-		D
Ignis (MH) II	09.03-03.07	14-15	5,5x14	45	Image Ride	38	45	14	1392,-		
(Obs! bult 12x1.50)			6x15	19	ATS Streetrallye Slv	38	45	14	1960,-		
Liana	06.01-12.07	14-18	6x15	37	Image Comet	45	45	0	1316,-		D
Swift (EZ) 4wd	05.05-08.10	14-16	6x15	42	Image Brio	40	45	10	1304,-		
			6x15	45	Image Ride	38	45	14	1552,-		
			6x16	37	Image Comet	40	45	10	1536,-		
			6x16	38	Image Comet Slv	40	45	10	1536,-		
			6,5x16	19	ATS Streetrallye Slv	40	45	10	2240,-		
			6,5x16	34	CSP 16	40	45	10	1468,-		
			6,5x16	42	Image Brio	38	45	14	1524,-		
			7x17	42	Image Brio	40	45	10	1832,-		
SUZUKI			PCD: **4-100** Bolt - Mutter: **12x1,50B** CB: **54,1**								
Swift (NZ)	09.10-04.17	15-18	5x15	37	Image Comet	40	40	0	1316,-	**OE-fit**	B,D
			5x15	38	Image Comet Slv	40	40	0	1316,-	**OE-fit**	B,D
			5,5x15	34	CSP 16	36	40	8	1228,-	**OE-fit**	B,D
			6x15	19	ATS Streetrallye Slv	38	40	4	1960,-		
			6x15	42	Image Brio	40	40	0	1304,-		B
			6x15	45	Image Ride	38	40	4	1552,-		
			6x16	37	Image Comet	40	40	0	1536,-		B
			6x16	38	Image Comet Slv	40	40	0	1536,-		B
			6,5x16	19	ATS Streetrallye Slv	40	40	0	2240,-		
			6,5x16	34	CSP 16	40	40	0	1468,-		
			6,5x16	42	Image Brio	38	40	4	1524,-		B

Forts. neste side »

Bilmerke - Bilmodell	Årsmodell	Dimensjon	Felgdim.	Bilde	Felgmodell	ET Felg	ET Bil	Avvik ET	Veil. Pris eks. MVA	Merknader	B,C D, M
SUZUKI (forts.)				PCD: **4-100** Bolt - Mutter: **12x1,50B** CB: **54,1**							
			7x17	18	ATS Streetrallye Blk	45	40	-10	3344,-		
			7x17	42	Image Brio	40	40	0	1832,-		B
			7,5x18	18	ATS Streetrallye Blk	38	40	4	4180,-		M
SUZUKI				PCD: **4-100** Bolt - Mutter: **12x1,25** CB: **54,1**							
Baleno (EW)	04.16-	15-18	5x15	37	Image Comet	40	40	0	1316,-	**OE-fit**	B,D
Ignis (MF)	12.16-	15-18	5x15	38	Image Comet Slv	40	40	0	1316,-	**OE-fit**	B,D
Swift (AZ)	05.17-	15-18	5,5x15	34	CSP 16	36	40	8	1228,-	**OE-fit**	B,D
Swift (FZ) 4wd	09.10-04.17	15-18	6x15	19	ATS Streetrallye Slv	38	40	4	1960,-		
			6x15	42	Image Brio	40	40	0	1304,-		B
			6x15	45	Image Ride	38	40	4	1552,-		
			6x16	37	Image Comet	40	40	0	1536,-		B
			6x16	38	Image Comet Slv	40	40	0	1536,-		B
			6,5x16	19	ATS Streetrallye Slv	40	40	0	2240,-		
			6,5x16	34	CSP 16	40	40	0	1468,-		
			6,5x16	42	Image Brio	38	40	4	1524,-		B
			7x17	18	ATS Streetrallye Blk	45	40	-10	3344,-		
			7x17	42	Image Brio	40	40	0	1832,-		B
			7,5x18	18	ATS Streetrallye Blk	38	40	4	4180,-		M
SUZUKI				PCD: **5-114,3** Bolt - Mutter: **12x1,50B** CB: **60,1**							
Swift (NZ) Sport	12.11-04.17	16-19	6,5x16	34	CSP 16	50	50	0	1468,-	**OE-fit**	B,D
			6,5x16	35	CSP 16 M.Gun	50	50	0	1468,-	**OE-fit**	B,D
			6,5x16	36	Image Colt	45	50	10	1624,-		B
			6,5x16	40	Image Spirit	45	50	10	1264,-		B
			6,5x16	46	Image Stella	45	50	10	1548,-		B
			6,5x16	47	Image Stella M.Blk	45	50	10	1548,-		B
			6,5x16	49	Image Motion G.Gun	45	50	10	1468,-		B
			6,5x16	92	Image Colt L.Gun	45	50	10	1548,-		B
			7x17	17	BM Drive M.Gun	50	50	0	1736,-		
			7x17	40	Image Spirit	45	50	10	1476,-		B
			7x17	46	Image Stella	45	50	10	1812,-		B
			7x17	47	Image Stella M.Blk	45	50	10	1812,-		B
			7x17	48	Image Motion	45	50	10	1736,-		B
			7x17	49	Image Motion G.Gun	45	50	10	1736,-		B
			7,5x17	9	Nitro Sabre G.Blk	45	50	10	3052,-		B
			7,5x17	36	Image Colt	45	50	10	1956,-		B
			7,5x17	92	Image Colt L.Gun	45	50	10	1876,-		B
			7,5x18	2	Nitro Sapphire FF	45	50	10	3944,-		B
			7,5x18	46	Image Stella	45	50	10	2276,-		B
			7,5x18	47	Image Stella M.Blk	45	50	10	2276,-		B
			8x18	7	Nitro Spark G.Blk/Grey	45	50	10	3476,-		B
			8x18	8	Nitro Spark G.Blk/Red	45	50	10	3476,-		B
			8x18	9	Nitro Sabre G.Blk	45	50	10	3496,-		B
			8x18	11	Nitro Demon	48	50	4	2784,-		
			8x18	16	Advanti Inizio DST	45	50	10	3828,-		B
			8x18	36	Image Colt	45	50	10	2412,-		B
			8x18	48	Image Motion	45	50	10	2204,-		B
			8x18	49	Image Motion G.Gun	45	50	10	2204,-		B
			8x18	92	Image Colt L.Gun	45	50	10	2296,-		B
			7,5x19	2	Nitro Sapphire FF	45	50	10	4572,-		B
			8x19	16	Advanti Inizio DST	45	50	10	4412,-		B
SUZUKI				PCD: **5-114,3** Bolt - Mutter: **12x1,25** CB: **60,1**							
Swift (AZ) Sport	12.17-	16-19	6,5x16	34	CSP 16	50	50	0	1468,-		D
			6,5x16	35	CSP 16 M.Gun	50	50	0	1468,-		D
			6,5x16	36	Image Colt	45	50	10	1624,-		
			6,5x16	40	Image Spirit	45	50	10	1264,-		
			6,5x16	46	Image Stella	45	50	10	1548,-		
			6,5x16	47	Image Stella M.Blk	45	50	10	1548,-		
			6,5x16	48	Image Motion	45	50	10	1468,-		
			6,5x16	49	Image Motion G.Gun	45	50	10	1468,-		
			6,5x16	50	Image Legend	45	50	10	1544,-		
			6,5x16	92	Image Colt L.Gun	45	50	10	1548,-		
			7x16	17	BM Drive M.Gun	45	50	10	1476,-		
			7x17	17	BM Drive M.Gun	50	50	0	1736,-		
			7x17	34	CSP 16	48	50	4	1836,-		
			7x17	35	CSP 16 M.Gun	48	50	4	1836,-		
			7x17	40	Image Spirit	45	50	10	1476,-		
			7x17	46	Image Stella	45	50	10	1812,-		
			7x17	47	Image Stella M.Blk	45	50	10	1812,-		
			7x17	48	Image Motion	45	50	10	1736,-		
			7x17	49	Image Motion G.Gun	45	50	10	1736,-		
			7,5x17	9	Nitro Sabre G.Blk	45	50	10	3052,-		
			7,5x17	36	Image Colt	45	50	10	1956,-		
			7,5x17	50	Image Legend	45	50	10	1812,-		
			7,5x17	92	Image Colt L.Gun	45	50	10	1876,-		
			7,5x18	2	Nitro Sapphire FF	45	50	10	3944,-		
			7,5x18	34	CSP 16	48	50	4	2444,-		
			7,5x18	35	CSP 16 M.Gun	48	50	4	2444,-		
			7,5x18	46	Image Stella	45	50	10	2276,-		
			7,5x18	47	Image Stella M.Blk	45	50	10	2276,-		
			8x18	7	Nitro Spark G.Blk/Grey	45	50	10	3476,-		
			8x18	8	Nitro Spark G.Blk/Red	45	50	10	3476,-		
			8x18	9	Nitro Sabre G.Blk	45	50	10	3496,-		
			8x18	11	Nitro Demon	48	50	4	2784,-		M
			8x18	16	Advanti Inizio DST	45	50	10	3828,-		
			8x18	36	Image Colt	45	50	10	2412,-		

Forts. neste side »

Bilmerke - Bilmodell	Årsmodell	Dimensjon	Felgdim.	Bilde	Felgmodell	ET Felg	ET Bil	Avvik ET	Veil. Pris eks. MVA	Merknader	B,C D, M
SUZUKI (forts.)			PCD: **5-114,3** Bolt - Mutter: **12x1,25** CB: **60,1**								
			8x18	48	Image Motion	45	50	10	2204,-		
			8x18	49	Image Motion G.Gun	45	50	10	2204,-		
			8x18	50	Image Legend	45	50	10	2276,-		M
			8x18	92	Image Colt L.Gun	45	50	10	2296,-		
			7,5x19	2	Nitro Sapphire FF	45	50	10	4572,-		
			8x19	16	Advanti Inizio DST	45	50	10	4412,-		
SUZUKI			PCD: **5-114,3** Bolt - Mutter: **12x1,50B** CB: **60,1**								
Swift (MZ) Sport	03.07-08.10	15-18	6x15	48	Image Motion	45	50	10	1224,-		B
SX4 (EY)	06.06-11.13	15-19	6,5x16	34	CSP 16	50	50	0	1468,-	**OE-fit**	B,D
SX4 (JY) s-cross	08.13-	16-20	6,5x16	35	CSP 16 M.Gun	50	50	0	1468,-	**OE-fit**	B,D
Vitara (LY)	02.15-	16-20	6,5x16	36	Image Colt	45	50	10	1624,-		B
			6,5x16	40	Image Spirit	45	50	10	1264,-		B
			6,5x16	46	Image Stella	45	50	10	1548,-		B
			6,5x16	47	Image Stella M.Blk	45	50	10	1548,-		B
			6,5x16	49	Image Motion G.Gun	45	50	10	1468,-		B
			6,5x16	92	Image Colt L.Gun	45	50	10	1548,-		B
			7x17	17	BM Drive M.Gun	50	50	0	1736,-		
			7x17	40	Image Spirit	45	50	10	1476,-		B
			7x17	46	Image Stella	45	50	10	1812,-		B
			7x17	47	Image Stella M.Blk	45	50	10	1812,-		B
			7x17	48	Image Motion	45	50	10	1736,-		B
			7x17	49	Image Motion G.Gun	45	50	10	1736,-		B
			7,5x17	9	Nitro Sabre G.Blk	45	50	10	3052,-		B
			7,5x17	36	Image Colt	45	50	10	1956,-		B
			7,5x17	92	Image Colt L.Gun	45	50	10	1876,-		B
			7,5x18	2	Nitro Sapphire FF	45	50	10	3944,-		B
			7,5x18	46	Image Stella	45	50	10	2276,-		B
			7,5x18	47	Image Stella M.Blk	45	50	10	2276,-		B
			8x18	7	Nitro Spark G.Blk/Grey	45	50	10	3476,-		B
			8x18	8	Nitro Spark G.Blk/Red	45	50	10	3476,-		B
			8x18	9	Nitro Sabre G.Blk	45	50	10	3496,-		B
			8x18	11	Nitro Demon	48	50	4	2784,-		
			8x18	16	Advanti Inizio DST	45	50	10	3828,-		B
			8x18	36	Image Colt	45	50	10	2412,-		B
			8x18	48	Image Motion	45	50	10	2204,-		B
			8x18	49	Image Motion G.Gun	45	50	10	2204,-		B
			8x18	92	Image Colt L.Gun	45	50	10	2296,-		B
			7,5x19	2	Nitro Sapphire FF	45	50	10	4572,-		B
			8x19	16	Advanti Inizio DST	45	50	10	4412,-		B
			8x20	2	Nitro Sapphire FF	45	50	10	5096,-		B
SUZUKI			PCD: **5-114,3** Bolt - Mutter: **12x1,25** CB: **60,1**								
Grand Vitara (JT)	12.05-	16-20	6,5x16	36	Image Colt	45	45	0	1624,-		
Kizashi (FR)	06.10-07.15	16-20	6,5x16	40	Image Spirit	45	45	0	1264,-		
			6,5x16	46	Image Stella	45	45	0	1548,-		
			6,5x16	47	Image Stella M.Blk	45	45	0	1548,-		
			6,5x16	49	Image Motion G.Gun	45	45	0	1468,-		
			6,5x16	92	Image Colt L.Gun	45	45	0	1548,-		
			7x17	40	Image Spirit	45	45	0	1476,-		
			7x17	46	Image Stella	45	45	0	1812,-		
			7x17	47	Image Stella M.Blk	45	45	0	1812,-		
			7x17	48	Image Motion	45	45	0	1736,-		
			7x17	49	Image Motion G.Gun	45	45	0	1736,-		
			7,5x17	9	Nitro Sabre G.Blk	45	45	0	3052,-		
			7,5x17	36	Image Colt	45	45	0	1956,-		
			7,5x17	92	Image Colt L.Gun	45	45	0	1876,-		
			7,5x18	2	Nitro Sapphire FF	45	45	0	3944,-		
			7,5x18	46	Image Stella	45	45	0	2276,-		
			7,5x18	47	Image Stella M.Blk	45	45	0	2276,-		
			8x18	7	Nitro Spark G.Blk/Grey	45	45	0	3476,-		
			8x18	8	Nitro Spark G.Blk/Red	45	45	0	3476,-		
			8x18	9	Nitro Sabre G.Blk	45	45	0	3496,-		
			8x18	11	Nitro Demon	48	45	-6	2784,-		
			8x18	16	Advanti Inizio DST	45	45	0	3828,-		
			8x18	36	Image Colt	45	45	0	2412,-		
			8x18	48	Image Motion	45	45	0	2204,-		
			8x18	49	Image Motion G.Gun	45	45	0	2204,-		
			8x18	92	Image Colt L.Gun	45	45	0	2296,-		
			7,5x19	2	Nitro Sapphire FF	45	45	0	4572,-		
			8x19	16	Advanti Inizio DST	45	45	0	4412,-		
			8,5x19	5	Nitro Volcano G.Gun	45	45	0	4388,-		M
			8,5x19	6	Nitro Volcano	45	45	0	4632,-		M
			8,5x19	9	Nitro Sabre G.Blk	45	45	0	4292,-		M
			8,5x19	36	Image Colt	45	45	0	3028,-		M
			8,5x19	92	Image Colt L.Gun	45	45	0	2876,-		M
			8x20	2	Nitro Sapphire FF	45	45	0	5096,-		
			8,5x20	5	Nitro Volcano G.Gun	45	45	0	4824,-		M
			8,5x20	6	Nitro Volcano	45	45	0	5164,-		M
			8,5x20	7	Nitro Spark G.Blk/Grey	45	45	0	4660,-		M
			8,5x20	8	Nitro Spark G.Blk/Red	45	45	0	4660,-		M
			8,5x20	9	Nitro Sabre G.Blk	45	45	0	4800,-		M
			8,5x20	36	Image Colt	45	45	0	3432,-		M
			8,5x20	92	Image Colt L.Gun	45	45	0	3276,-		M

Bilmerke - Bilmodell	Årsmodell	Dimensjon	Felgdim.	Bilde	Felgmodell	ET Felg	ET Bil	Avvik ET	Veil. Pris eks. MVA	Merknader	B,C D, M
TESLA				PCD: **5-114,3** Bolt - Mutter: **14x1,50** CB: **64,1**							
3	08.17-	18-21	8x18	7	Nitro Spark G.Blk/Grey	35	40	10	3476,-		
Performance 19"			8x18	8	Nitro Spark G.Blk/Red	35	40	10	3476,-		
Y	01.20-	19-21	8x18	9	Nitro Sabre G.Blk	35	40	10	3496,-		
			8x18	36	Image Colt	35	40	10	2412,-		
			8x18	48	Image Motion	40	40	0	2204,-	**OE-fit**	B,D
			8x18	49	Image Motion G.Gun	40	40	0	2204,-	**OE-fit**	B,D
			8x18	92	Image Colt L.Gun	35	40	10	2296,-		
			8,5x18	2	Nitro Sapphire FF	40	40	0	4036,-	**OE-fit**	B,D
			8,5x18	16	Advanti Inizio DST	40	40	0	3828,-	**OE-fit**	B,D
			8x19	48	Image Motion	40	40	0	2532,-	**OE-fit**	B,D
			8x19	49	Image Motion G.Gun	40	40	0	2532,-	**OE-fit**	B,D
			8,5x19	2	Nitro Sapphire FF	40	40	0	4684,-	**OE-fit**	B,D
			8,5x19	3	Nitro Turismo FF	40	40	0	4492,-	**OE-fit**	B,D
			8,5x19	5	Nitro Volcano G.Gun	35	40	10	4388,-		
			8,5x19	6	Nitro Volcano	35	40	10	4632,-		
			8,5x19	9	Nitro Sabre G.Blk	35	40	10	4292,-		
			8,5x19	16	Advanti Inizio DST	40	40	0	4412,-	**OE-fit**	B,D
			8,5x19	36	Image Colt	35	40	10	3028,-		
			8,5x19	92	Image Colt L.Gun	35	40	10	2876,-		
			8,5x19	96	Image Colt SUV G.Blk/Pol	40	40	0	3492,-	**OE-fit**	B,D
			8,5x19	97	Image Colt SUV L.Gun	40	40	0	3396,-		B
			8,5x20	1	Nitro Throne FF	40	40	0	5060,-		
			8,5x20	2	Nitro Sapphire FF	40	40	0	5216,-	**OE-fit**	B,D
			8,5x20	3	Nitro Turismo FF	40	40	0	4812,-	**OE-fit**	B,D
			8,5x20	5	Nitro Volcano G.Gun	35	40	10	4824,-		
			8,5x20	6	Nitro Volcano	35	40	10	5164,-		
			8,5x20	7	Nitro Spark G.Blk/Grey	35	40	10	4660,-		
			8,5x20	8	Nitro Spark G.Blk/Red	35	40	10	4660,-		
			8,5x20	9	Nitro Sabre G.Blk	35	40	10	4800,-		
			8,5x20	11	Nitro Demon	38	40	4	3808,-		
			8,5x20	36	Image Colt	35	40	10	3432,-		
			8,5x20	92	Image Colt L.Gun	35	40	10	3276,-		
			9x21	5	Nitro Volcano G.Gun	35	40	10	5540,-		M
			9x21	6	Nitro Volcano	35	40	10	5996,-		M
TESLA				PCD: **5-120** Bolt - Mutter: **14x1,50** CB: **64,1**							
S	06.12-	19-22	8x19	4	Nitro Turismo FF G.Gun/Pol	40	40	0	4644,-		
			8x19	10	Nitro Demon H.Slv	40	40	0	3624,-	**OE-fit**, Tesla OE-mutter	B,D
			8x19	11	Nitro Demon	40	40	0	3376,-		
			8,5x19	96	Image Colt SUV G.Blk/Pol	35	40	10	3492,-	**OE-fit**	B,D
			8,5x19	97	Image Colt SUV L.Gun	35	40	10	3396,-	**OE-fit**	B,D
			9x20	5	Nitro Volcano G.Gun	32	40	16	4824,-		
			9x20	6	Nitro Volcano	32	40	16	5164,-		
			9x20	10	Nitro Demon H.Slv	35	40	10	4104,-	**OE-fit**, Tesla OE-mutter	B,D
			9x20	11	Nitro Demon	35	40	10	3808,-	**OE-fit**, Tesla OE-mutter	B,D
			9x20	15	Nitro Magnum	30	40	20	4572,-		
			9x20	96	Image Colt SUV G.Blk/Pol	35	40	10	4124,-	**OE-fit**	B,D
			9x20	97	Image Colt SUV L.Gun	35	40	10	4008,-	**OE-fit**	B,D
			9x21	5	Nitro Volcano G.Gun	32	40	16	5540,-		
			9x21	6	Nitro Volcano	32	40	16	5996,-		
			9x22	15	Nitro Magnum	30	40	20	5420,-		
TESLA				PCD: **5-120** Bolt - Mutter: **14x1,50** CB: **64,1**							
X	04.16-	19-22	8,5x19	96	Image Colt SUV G.Blk/Pol	35	40	10	3492,-	**OE-fit**	B,D
			8,5x19	97	Image Colt SUV L.Gun	35	40	10	3396,-	**OE-fit**	B,D
			9x19	10	Nitro Demon H.Slv	35	40	10	3624,-	**OE-fit**, Tesla OE-mutter	B,D
			9x19	11	Nitro Demon	35	40	10	3376,-	**OE-fit**, Tesla OE-mutter	B,D
			9x20	10	Nitro Demon H.Slv	35	40	10	4104,-	**OE-fit**, Tesla OE-mutter	B,D
			9x20	11	Nitro Demon	35	40	10	3808,-	**OE-fit**, Tesla OE-mutter	B,D
			9x20	12	Nitro Edge M.Blk	40	40	0	4220,-		
			9x20	15	Nitro Magnum	30	40	20	4572,-		
			9x20	96	Image Colt SUV G.Blk/Pol	35	40	10	4124,-	**OE-fit**	B,D
			9x20	97	Image Colt SUV L.Gun	35	40	10	4008,-	**OE-fit**	B,D
			10x20	12	Nitro Edge M.Blk	40	40	0	4220,-	Kun bak	
			9x22	12	Nitro Edge M.Blk	40	40	0	4888,-		
			9x22	15	Nitro Magnum	30	40	20	5420,-		
			10x22	12	Nitro Edge M.Blk	40	40	0	4888,-	Kun bak	
TOYOTA				PCD: **4-100** Bolt - Mutter: **12x1,50** CB: **54,1**							
IQ (AJ1)	01.09-05.14	15-18	5x15	37	Image Comet	40	45	10	1316,-		D
			5x15	38	Image Comet Slv	40	45	10	1316,-		D
			5,5x15	34	CSP 16	35	45	20	1228,-	**OE-fit**, Toyota orig. mutter	B,D
			5,5x15	35	CSP 16 M.Gun	35	45	20	1228,-	**OE-fit**	B,D
			6x15	19	ATS Streetrallye Slv	38	45	14	1960,-		
			6x15	42	Image Brio	40	45	10	1304,-		
			6x15	45	Image Ride	38	45	14	1552,-		
			6x16	37	Image Comet	40	45	10	1536,-		
			6x16	38	Image Comet Slv	40	45	10	1536,-		
			6,5x16	19	ATS Streetrallye Slv	40	45	10	2240,-		
			6,5x16	34	CSP 16	40	45	10	1468,-		
			6,5x16	42	Image Brio	38	45	14	1524,-		
			7x17	42	Image Brio	40	45	10	1832,-		
			7,5x18	18	ATS Streetrallye Blk	38	45	14	4180,-		M

Bilmerke - Bilmodell	Årsmodell	Dimensjon	Felgdim.	Bilde	Felgmodell	ET Felg	ET Bil	Avvik ET	Veil. Pris eks. MVA	Merknader	B,C D, M
TOYOTA				PCD: **4-100** Bolt - Mutter: **12x1,50B**	CB: **54,1**						
Aygo (AB1)	07.05-06.14	14-17	5x14	34	CSP 16	35	39	8	1176,-		D
			5x14	35	CSP 16 M.Gun	35	39	8	1176,-		D
			5x14	37	Image Comet	35	39	8	1264,-		D
			5x15	37	Image Comet	35	39	8	1316,-		D
			5x15	38	Image Comet Slv	35	39	8	1316,-		D
			5,5x15	34	CSP 16	36	39	6	1228,-		D
			6x15	19	ATS Streetrallye Slv	38	39	2	1960,-		
			6x15	42	Image Brio	40	39	-2	1304,-		
			6x15	45	Image Ride	38	39	2	1552,-		
			6x16	37	Image Comet	40	39	-2	1536,-		
			6x16	38	Image Comet Slv	40	39	-2	1536,-		
TOYOTA				PCD: **4-100** Bolt - Mutter: **12x1,50B**	CB: **54,1**						
Aygo (AB1)	07.14-	14-18	5x14	34	CSP 16	35	35	0	1176,-		D
			5x14	35	CSP 16 M.Gun	35	35	0	1176,-		D
			5x14	37	Image Comet	35	35	0	1264,-		D
			5x15	37	Image Comet	35	35	0	1316,-		D
			5x15	38	Image Comet Slv	35	35	0	1316,-		D
			5,5x15	34	CSP 16	36	35	-2	1228,-		D
			6x15	19	ATS Streetrallye Slv	38	35	-6	1960,-		
			6x15	42	Image Brio	40	35	-10	1304,-		
			6x16	37	Image Comet	40	35	-10	1536,-		
			6x16	38	Image Comet Slv	40	35	-10	1536,-		
TOYOTA				PCD: **4-100** Bolt - Mutter: **12x1,50**	CB: **54,1**						
Yaris (XP13)	10.11-	14-18	5x14	34	CSP 16	35	39	8	1176,-		D
1.33, 1.4D4-D, 1.5 15"			5x14	37	Image Comet	35	39	8	1264,-		D
Hybrid 15"			5,5x14	45	Image Ride	38	39	2	1392,-		
			5x15	37	Image Comet	35	39	8	1316,-		D
			5,5x15	34	CSP 16	35	39	8	1228,-	**OE-fit**, Toyota orig. mutter	B,D
			5,5x15	35	CSP 16 M.Gun	35	39	8	1228,-	**OE-fit**, Toyota orig. mutter	B,D
			6x15	19	ATS Streetrallye Slv	38	39	2	1960,-		
			6x15	42	Image Brio	40	39	-2	1304,-		
			6x15	45	Image Ride	38	39	2	1552,-		
			6x16	37	Image Comet	40	39	-2	1536,-		
			6x16	38	Image Comet Slv	40	39	-2	1536,-		
			6,5x16	19	ATS Streetrallye Slv	40	39	-2	2240,-		
			6,5x16	34	CSP 16	40	39	-2	1468,-		
			6,5x16	42	Image Brio	38	39	2	1524,-		
			7x17	18	ATS Streetrallye Blk	45	39	-12	3344,-		
			7x17	42	Image Brio	40	39	-2	1832,-		
			7,5x18	18	ATS Streetrallye Blk	38	39	2	4180,-		M
TOYOTA				PCD: **4-100** Bolt - Mutter: **12x1,50**	CB: **54,1**						
Corolla	06.87-08.92	13-17	5x13	45	Image Ride	38	45	14	1336,-		
Corolla	09.92-06.97	14-18	5x14	34	CSP 16	35	45	20	1176,-		D
Corolla	07.97-12.01	14-18	5x14	35	CSP 16 M.Gun	35	45	20	1176,-		D
Corolla	01.02-02.07	15-19	5,5x14	37	Image Comet	45	45	0	1264,-		D
1.8 komp. 05-07 16"			5,5x14	45	Image Ride	38	45	14	1392,-		
Corolla Verso	01.02-06.04	15-18	5,5x15	34	CSP 16	36	45	18	1228,-		D
MR2 (W30)	10.99-07.07	15-18	5,5x15	35	CSP 16 M.Gun	35	45	20	1228,-	**OE-fit**, Toyota orig. mutter	B,D
Starlet	01.90-07.99	13-16	6x15	19	ATS Streetrallye Slv	38	45	14	1960,-		
Yaris	04.99-11.05	13-18	6x15	37	Image Comet	45	45	0	1316,-		D
Yaris (XP9)	12.05-09.11	14-18	6x15	42	Image Brio	40	45	10	1304,-		
1.3, 1.4D-4D 15"			6x15	45	Image Ride	38	45	14	1552,-		
Yaris Verso	04.99-01.07	14-18	6x16	37	Image Comet	40	45	10	1536,-		
			6x16	38	Image Comet Slv	40	45	10	1536,-		
			6,5x16	19	ATS Streetrallye Slv	40	45	10	2240,-		
			6,5x16	34	CSP 16	40	45	10	1468,-		
			6,5x16	42	Image Brio	38	45	14	1524,-		
			7x17	18	ATS Streetrallye Blk	45	45	0	3344,-		
			7x17	42	Image Brio	40	45	10	1832,-		
			7,5x18	18	ATS Streetrallye Blk	38	45	14	4180,-		M
TOYOTA				PCD: **5-100** Bolt - Mutter: **12x1,50**	CB: **54,1**						
Urban Cruiser (XP11)	05.09-	16-20	6,5x16	34	CSP 16	39	39	0	1468,-	**OE-fit**, Toyota orig. mutter	B,D
			6,5x16	35	CSP 16 M.Gun	39	39	0	1468,-	**OE-fit**, Toyota orig. mutter	B,D
			6,5x16	36	Image Colt	40	39	-2	1624,-		
			6,5x16	48	Image Motion	38	39	2	1468,-		
			6,5x16	49	Image Motion G.Gun	38	39	2	1468,-		
			6,5x16	92	Image Colt L.Gun	40	39	-2	1548,-		
TOYOTA				PCD: **5-114,3** Bolt - Mutter: **12x1,50**	CB: **60,1**						
Mirai	10.15-	17-17	7x17	17	BM Drive M.Gun	40	39	-2	1736,-	**OE-fit**, Toyota orig. mutter	B,D
			7x17	34	CSP 16	35	39	8	1836,-	**OE-fit**, Toyota orig. mutter	B,D
			7x17	35	CSP 16 M.Gun	35	39	8	1836,-	**OE-fit**, Toyota orig. mutter	B,D
TOYOTA				PCD: **5-100** Bolt - Mutter: **12x1,50**	CB: **54,1**						
Prius (HW2)	03.04-07.09	15-19	6x15	34	CSP 16	39	45	12	1228,-	**OE-fit**, Toyota orig. mutter	B,D
Prius (XW3)	08.09-01.16	15-19	6x15	48	Image Motion	40	45	10	1224,-		
Prius (XW5)	02.16-	15-19	6x15	49	Image Motion G.Gun	38	45	14	1224,-		
Verso S (XP12)	12.10-	15-19	6,5x16	34	CSP 16	39	45	12	1468,-	**OE-fit**, Toyota orig. mutter	B,D
			6,5x16	35	CSP 16 M.Gun	39	45	12	1468,-	**OE-fit**, Toyota orig. mutter	B,D
			6,5x16	36	Image Colt	40	45	10	1624,-		
			6,5x16	48	Image Motion	38	45	14	1468,-		
			6,5x16	49	Image Motion G.Gun	38	45	14	1468,-		
			6,5x16	92	Image Colt L.Gun	40	45	10	1548,-		
			7,5x17	36	Image Colt	43	45	4	1956,-		
			7,5x17	92	Image Colt L.Gun	43	45	4	1876,-		

Bilmerke - Bilmodell	Årsmodell	Dimensjon	Felgdim.	Bilde	Felgmodell	ET Felg	ET Bil	Avvik ET	Veil. Pris eks. MVA	Merknader	B,C D, M
TOYOTA				PCD: **5-100** Bolt - Mutter: **12x1,25** CB: **56,1**							
GT 86 (ZN)	03.12-	16-20	6,5x16	36	Image Colt	40	48	16	1624,-		
			6,5x16	92	Image Colt L.Gun	40	48	16	1548,-		
			7x17	34	CSP 16	48	48	0	1836,-	**OE-fit**, Toyota orig. mutter	B,D
			7,5x17	36	Image Colt	43	48	10	1956,-		
			7,5x17	92	Image Colt L.Gun	43	48	10	1876,-		
TOYOTA				PCD: **5-100** Bolt - Mutter: **12x1,50** CB: **54,1**							
Avensis (T25)	05.03-10.08	16-20	6,5x16	34	CSP 16	39	45	12	1468,-	**OE-fit**, Toyota orig. mutter	B,D
			6,5x16	35	CSP 16 M.Gun	39	45	12	1468,-	**OE-fit**, Toyota orig. mutter	B,D
			6,5x16	36	Image Colt	40	45	10	1624,-		
			6,5x16	48	Image Motion	38	45	14	1468,-		
			6,5x16	49	Image Motion G.Gun	38	45	14	1468,-		
			6,5x16	92	Image Colt L.Gun	40	45	10	1548,-		
TOYOTA				PCD: **5-114,3** Bolt - Mutter: **12x1,50** CB: **60,1**							
Corolla (E21)	01.19-	16-20	6,5x16	36	Image Colt	35	40	10	1624,-		
			6,5x16	46	Image Stella	39	40	2	1548,-	**OE-fit**	B,D
			6,5x16	47	Image Stella M.Blk	39	40	2	1548,-	**OE-fit**	B,D
			6,5x16	48	Image Motion	39	40	2	1468,-	**OE-fit**	B,D
			6,5x16	49	Image Motion G.Gun	39	40	2	1468,-	**OE-fit**	B,D
			6,5x16	50	Image Legend	39	40	2	1544,-	**OE-fit**	B,D
			6,5x16	92	Image Colt L.Gun	35	40	10	1548,-		
			7x16	17	BM Drive M.Gun	39	40	2	1476,-	**OE-fit**	B,D
			7x16	34	CSP 16	40	40	0	1468,-	**OE-fit**	B,D
			7x16	35	CSP 16 M.Gun	40	40	0	1468,-	**OE-fit**	B,D
			7x16	40	Image Spirit	40	40	0	1264,-	**OE-fit**	B,D
			7,5x17	9	Nitro Sabre G.Blk	35	40	10	3052,-		
			7,5x17	34	CSP 16	40	40	0	1836,-	**OE-fit**	B,D
			7,5x17	35	CSP 16 M.Gun	40	40	0	1836,-	**OE-fit**	B,D
			7,5x17	36	Image Colt	35	40	10	1956,-		
			7,5x17	92	Image Colt L.Gun	35	40	10	1876,-		
			7,5x18	2	Nitro Sapphire FF	35	40	10	3944,-		
			8x18	7	Nitro Spark G.Blk/Grey	35	40	10	3476,-		
			8x18	8	Nitro Spark G.Blk/Red	35	40	10	3476,-		
			8x18	9	Nitro Sabre G.Blk	35	40	10	3496,-		
			8x18	16	Advanti Inizio DST	35	40	10	3828,-		
			8x18	36	Image Colt	35	40	10	2412,-		B
			8x18	92	Image Colt L.Gun	35	40	10	2296,-		
			7,5x19	2	Nitro Sapphire FF	35	40	10	4572,-		
			8x19	11	Nitro Demon	38	40	4	3376,-		
			8x19	16	Advanti Inizio DST	35	40	10	4412,-		
			8,5x19	9	Nitro Sabre G.Blk	35	40	10	4292,-		M
			8,5x19	36	Image Colt	35	40	10	3028,-		M
			8,5x19	92	Image Colt L.Gun	35	40	10	2876,-		M
			8x20	2	Nitro Sapphire FF	35	40	10	5096,-		
			8,5x20	1	Nitro Throne FF	40	40	0	5060,-		M
			8,5x20	7	Nitro Spark G.Blk/Grey	35	40	10	4660,-		M
			8,5x20	8	Nitro Spark G.Blk/Red	35	40	10	4660,-		M
			8,5x20	9	Nitro Sabre G.Blk	35	40	10	4800,-		M
			8,5x20	36	Image Colt	35	40	10	3432,-		M
			8,5x20	92	Image Colt L.Gun	35	40	10	3276,-		M
TOYOTA				PCD: **5-114,3** Bolt - Mutter: **12x1,50** CB: **60,1**							
Avensis (T27)	01.09-04.15	16-20	6,5x16	34	CSP 16	39	45	12	1468,-	**OE-fit**, Toyota orig. mutter	B,D
2.2D-4D (110kW, 130kW) 17"			6,5x16	35	CSP 16 M.Gun	39	45	12	1468,-	**OE-fit**, Toyota orig. mutter	B,D
Avensis (T27)	05.15-	16-20	6,5x16	36	Image Colt	45	45	0	1624,-		
2.0D-4D (105kW) 17"			6,5x16	46	Image Stella	39	45	12	1548,-	**OE-fit**	B,D
Prius (XW4) Plus	06.12-	16-20	6,5x16	47	Image Stella M.Blk	39	45	12	1548,-	**OE-fit**	B,D
			6,5x16	48	Image Motion	39	45	12	1468,-	**OE-fit**, Toyota orig. mutter	B,D
			6,5x16	49	Image Motion G.Gun	39	45	12	1468,-	**OE-fit**	B,D
			6,5x16	50	Image Legend	39	45	12	1544,-	**OE-fit**	B,D
			6,5x16	92	Image Colt L.Gun	45	45	0	1548,-		
			7x16	17	BM Drive M.Gun	39	45	12	1476,-	**OE-fit**, Toyota orig. mutter	B,D
			7x16	40	Image Spirit	40	45	10	1264,-	**OE-fit**	B,D
			7x17	17	BM Drive M.Gun	40	45	10	1736,-	**OE-fit**, Toyota orig. mutter	B,D
			7x17	34	CSP 16	45	45	0	1836,-	**OE-fit**, Toyota orig. mutter	B,D
			7x17	35	CSP 16 M.Gun	45	45	0	1836,-	**OE-fit**, Toyota orig. mutter	B,D
			7x17	40	Image Spirit	45	45	0	1476,-	**OE-fit**	B,D
			7x17	46	Image Stella	45	45	0	1812,-	**OE-fit**	B,D
			7x17	47	Image Stella M.Blk	45	45	0	1812,-	**OE-fit**	B,D
			7x17	48	Image Motion	45	45	0	1736,-	**OE-fit**, Toyota orig. mutter	B,D
			7x17	49	Image Motion G.Gun	45	45	0	1736,-	**OE-fit**	B,D
			7,5x17	9	Nitro Sabre G.Blk	45	45	0	3052,-		
			7,5x17	36	Image Colt	45	45	0	1956,-		
			7,5x17	50	Image Legend	45	45	0	1812,-	**OE-fit**	B,D
			7,5x17	92	Image Colt L.Gun	45	45	0	1876,-		
			7,5x18	2	Nitro Sapphire FF	45	45	0	3944,-		
			7,5x18	34	CSP 16	45	45	0	2444,-	**OE-fit**, Toyota orig. mutter	B,D
			7,5x18	35	CSP 16 M.Gun	45	45	0	2444,-	**OE-fit**, Toyota orig. mutter	B,D
			7,5x18	46	Image Stella	45	45	0	2276,-	**OE-fit**	B,D
			7,5x18	47	Image Stella M.Blk	45	45	0	2276,-	**OE-fit**	B,D
			8x18	7	Nitro Spark G.Blk/Grey	45	45	0	3476,-		
			8x18	8	Nitro Spark G.Blk/Red	45	45	0	3476,-		
			8x18	9	Nitro Sabre G.Blk	45	45	0	3496,-		
			8x18	11	Nitro Demon	48	45	-6	2784,-		
			8x18	16	Advanti Inizio DST	45	45	0	3828,-		
			8x18	36	Image Colt	45	45	0	2412,-		
			8x18	48	Image Motion	45	45	0	2204,-		

Forts. neste side »

Bilmerke - Bilmodell	Årsmodell	Dimensjon	Felgdim.	Bilde	Felgmodell	ET Felg	ET Bil	Avvik ET	Veil. Pris eks. MVA	Merknader	B,C D, M
TOYOTA (forts.)				PCD: **5-114,3** Bolt - Mutter: **12x1,50**		CB: **60,1**					
			8x18	49	Image Motion G.Gun	45	45	0	2204,-		
			8x18	50	Image Legend	45	45	0	2276,-	**OE-fit**	B,D
			8x18	92	Image Colt L.Gun	45	45	0	2296,-		
			7,5x19	2	Nitro Sapphire FF	45	45	0	4572,-		
			8x19	16	Advanti Inizio DST	45	45	0	4412,-		
			8,5x19	5	Nitro Volcano G.Gun	45	45	0	4388,-		M
			8,5x19	6	Nitro Volcano	45	45	0	4632,-		M
			8,5x19	9	Nitro Sabre G.Blk	45	45	0	4292,-		M
			8,5x19	36	Image Colt	45	45	0	3028,-		M
			8,5x19	92	Image Colt L.Gun	45	45	0	2876,-		M
			8x20	2	Nitro Sapphire FF	45	45	0	5096,-		
			8,5x20	1	Nitro Throne FF	40	45	10	5060,-		M
			8,5x20	5	Nitro Volcano G.Gun	45	45	0	4824,-		M
			8,5x20	6	Nitro Volcano	45	45	0	5164,-		M
			8,5x20	7	Nitro Spark G.Blk/Grey	45	45	0	4660,-		M
			8,5x20	8	Nitro Spark G.Blk/Red	45	45	0	4660,-		M
			8,5x20	9	Nitro Sabre G.Blk	45	45	0	4800,-		M
			8,5x20	36	Image Colt	45	45	0	3432,-		M
			8,5x20	92	Image Colt L.Gun	45	45	0	3276,-		M
TOYOTA				PCD: **5-114,3** Bolt - Mutter: **12x1,50**		CB: **60,1**					
Verso (AR2)	05.09-08.18	16-20	6,5x16	34	CSP 16	39	39	0	1468,-	**OE-fit**, Toyota orig. mutter	B,D
2.2D-4D (110kW, 130kW) 17"			6,5x16	35	CSP 16 M.Gun	39	39	0	1468,-	**OE-fit**, Toyota orig. mutter	B,D
			6,5x16	36	Image Colt	35	39	8	1624,-		
			6,5x16	46	Image Stella	39	39	0	1548,-	**OE-fit**	B,D
			6,5x16	47	Image Stella M.Blk	39	39	0	1548,-	**OE-fit**	B,D
			6,5x16	48	Image Motion	39	39	0	1468,-	**OE-fit**, Toyota orig. mutter	B,D
			6,5x16	49	Image Motion G.Gun	39	39	0	1468,-	**OE-fit**	B,D
			6,5x16	50	Image Legend	39	39	0	1544,-	**OE-fit**	B,D
			6,5x16	92	Image Colt L.Gun	35	39	8	1548,-		
			7x16	17	BM Drive M.Gun	39	39	0	1476,-	**OE-fit**, Toyota orig. mutter	B,D
			7x16	40	Image Spirit	40	39	-2	1264,-	**OE-fit**	B,D
			7x17	17	BM Drive M.Gun	40	39	-2	1736,-	**OE-fit**, Toyota orig. mutter	B,D
			7x17	34	CSP 16	45	39	-12	1836,-	**OE-fit**, Toyota orig. mutter	B,D
			7x17	35	CSP 16 M.Gun	45	39	-12	1836,-	**OE-fit**, Toyota orig. mutter	B,D
			7x17	40	Image Spirit	45	39	-12	1476,-	**OE-fit**	B,D
			7x17	48	Image Motion	45	39	-12	1736,-	**OE-fit**, Toyota orig. mutter	B,D
			7x17	49	Image Motion G.Gun	45	39	-12	1736,-	**OE-fit**	B,D
			7,5x17	9	Nitro Sabre G.Blk	35	39	8	3052,-		
			7,5x17	34	CSP 16	40	39	-2	1836,-	**OE-fit**	B,D
			7,5x17	35	CSP 16 M.Gun	40	39	-2	1836,-	**OE-fit**	B,D
			7,5x17	36	Image Colt	35	39	8	1956,-		
			7,5x17	50	Image Legend	45	39	-12	1812,-	**OE-fit**	B,D
			7,5x17	92	Image Colt L.Gun	35	39	8	1876,-		
			7,5x18	2	Nitro Sapphire FF	35	39	8	3944,-		
			7,5x18	34	CSP 16	45	39	-12	2444,-	**OE-fit**, Toyota orig. mutter	B,D
			7,5x18	35	CSP 16 M.Gun	45	39	-12	2444,-	**OE-fit**, Toyota orig. mutter	B,D
			7,5x18	46	Image Stella	45	39	-12	2276,-	**OE-fit**	B,D
			7,5x18	47	Image Stella M.Blk	45	39	-12	2276,-	**OE-fit**	B,D
			8x18	7	Nitro Spark G.Blk/Grey	35	39	8	3476,-		
			8x18	8	Nitro Spark G.Blk/Red	35	39	8	3476,-		
			8x18	9	Nitro Sabre G.Blk	35	39	8	3496,-		
			8x18	16	Advanti Inizio DST	35	39	8	3828,-		
			8x18	36	Image Colt	35	39	8	2412,-		B
			8x18	50	Image Legend	45	39	-12	2276,-	**OE-fit**	B,D
			8x18	92	Image Colt L.Gun	35	39	8	2296,-		
			7,5x19	2	Nitro Sapphire FF	35	39	8	4572,-		
			8x19	11	Nitro Demon	38	39	2	3376,-		
			8x19	16	Advanti Inizio DST	35	39	8	4412,-		
			8,5x19	5	Nitro Volcano G.Gun	35	39	8	4388,-		M
			8,5x19	6	Nitro Volcano	35	39	8	4632,-		M
			8,5x19	9	Nitro Sabre G.Blk	35	39	8	4292,-		M
			8,5x19	36	Image Colt	35	39	8	3028,-		M
			8,5x19	92	Image Colt L.Gun	35	39	8	2876,-		M
			8x20	2	Nitro Sapphire FF	35	39	8	5096,-		
			8,5x20	1	Nitro Throne FF	40	39	-2	5060,-		M
			8,5x20	5	Nitro Volcano G.Gun	35	39	8	4824,-		M
			8,5x20	6	Nitro Volcano	35	39	8	5164,-		M
			8,5x20	7	Nitro Spark G.Blk/Grey	35	39	8	4660,-		M
			8,5x20	8	Nitro Spark G.Blk/Red	35	39	8	4660,-		M
			8,5x20	9	Nitro Sabre G.Blk	35	39	8	4800,-		M
			8,5x20	11	Nitro Demon	38	39	2	3808,-		M
			8,5x20	36	Image Colt	35	39	8	3432,-		M
			8,5x20	92	Image Colt L.Gun	35	39	8	3276,-		M
TOYOTA				PCD: **5-114,3** Bolt - Mutter: **12x1,50**		CB: **60,1**					
Auris	03.07-11.12	15-20	6x15	34	CSP 16	39	45	12	1228,-	**OE-fit**, Toyota orig. mutter	B,D
(15" kun 1.4D-4D & 1.8 Hybrid)			6x15	48	Image Motion	45	45	0	1224,-		
2.2D-4D 17"			6,5x16	34	CSP 16	45	45	0	1468,-	**OE-fit**, Toyota orig. mutter	B,D
Auris (E15)	12.12-	15-20	6,5x16	35	CSP 16 M.Gun	45	45	0	1468,-	**OE-fit**, Toyota orig. mutter	B,D
Hybrid comfort 16"			6,5x16	36	Image Colt	45	45	0	1624,-		
Avensis (T25) 2.2D-4D	07.05-12.08	16-20	6,5x16	46	Image Stella	39	45	12	1548,-	**OE-fit**	B,D
(110kW, 130kW)			6,5x16	47	Image Stella M.Blk	39	45	12	1548,-	**OE-fit**	B,D
Avensis Verso	10.01-03.05	15-19	6,5x16	48	Image Motion	39	45	12	1468,-	**OE-fit**, Toyota orig. mutter	B,D
Camry	05.92-12.01	15-20	6,5x16	49	Image Motion G.Gun	39	45	12	1468,-	**OE-fit**	B,D
Camry	01.02-02.06	16-20	6,5x16	50	Image Legend	39	45	12	1544,-	**OE-fit**	B,D
Camry (XV40)	03.06-07.11	16-20	6,5x16	92	Image Colt L.Gun	45	45	0	1548,-		
3.5 17"			7x16	17	BM Drive M.Gun	39	45	12	1476,-	**OE-fit**, Toyota orig. mutter	B,D

Forts. neste side »

Bilmerke - Bilmodell	Årsmodell	Dimensjon	Felgdim.	Bilde	Felgmodell	ET Felg	ET Bil	Avvik ET	Veil. Pris eks. MVA	Merknader	B,C D, M
TOYOTA (forts.)				PCD: **5-114,3** Bolt - Mutter: **12x1,50**	CB: **60,1**						
Camry (XV50)	08.11-10.17	16-20	7x16	40	Image Spirit	40	45	10	1264,-	**OE-fit**	B,D
3.5 17"			7x17	17	BM Drive M.Gun	40	45	10	1736,-	**OE-fit**, Toyota orig. mutter	B,D
C-HR (AX1T)	09.16-	16-20	7x17	34	CSP 16	45	45	0	1836,-	**OE-fit**, Toyota orig. mutter	B,D
4wd 17"			7x17	35	CSP 16 M.Gun	45	45	0	1836,-	**OE-fit**, Toyota orig. mutter	B,D
Corolla sedan	08.07-	16-20	7x17	40	Image Spirit	45	45	0	1476,-	**OE-fit**	B,D
Corolla Verso	07.04-04.09	16-20	7x17	46	Image Stella	45	45	0	1812,-	**OE-fit**	B,D
MR2 (W20)	06.89-09.99	16-20	7x17	47	Image Stella M.Blk	45	45	0	1812,-	**OE-fit**	B,D
PicNic	09.96-06.01	14-17	7x17	48	Image Motion	45	45	0	1736,-	**OE-fit**, Toyota orig. mutter	B,D
(Max 7,5" bredd)			7x17	49	Image Motion G.Gun	45	45	0	1736,-	**OE-fit**	B,D
Previa	10.90-06.00	15-18	7,5x17	9	Nitro Sabre G.Blk	45	45	0	3052,-		
Previa II	07.00-08.03	15-18	7,5x17	36	Image Colt	45	45	0	1956,-		
Previa II (Facelift)	09.03-03.06	16-19	7,5x17	50	Image Legend	45	45	0	1812,-	**OE-fit**	B,D
Previa III	04.06-	16-20	7,5x17	92	Image Colt L.Gun	45	45	0	1876,-		
			7,5x18	2	Nitro Sapphire FF	45	45	0	3944,-		
			7,5x18	34	CSP 16	45	45	0	2444,-	**OE-fit**, Toyota orig. mutter	B,D
			7,5x18	35	CSP 16 M.Gun	45	45	0	2444,-	**OE-fit**, Toyota orig. mutter	B,D
			7,5x18	46	Image Stella	45	45	0	2276,-	**OE-fit**	B,D
			7,5x18	47	Image Stella M.Blk	45	45	0	2276,-	**OE-fit**	B,D
			8x18	7	Nitro Spark G.Blk/Grey	45	45	0	3476,-		
			8x18	8	Nitro Spark G.Blk/Red	45	45	0	3476,-		
			8x18	9	Nitro Sabre G.Blk	45	45	0	3496,-		
			8x18	11	Nitro Demon	48	45	-6	2784,-		
			8x18	16	Advanti Inizio DST	45	45	0	3828,-		
			8x18	36	Image Colt	45	45	0	2412,-		
			8x18	48	Image Motion	45	45	0	2204,-		
			8x18	49	Image Motion G.Gun	45	45	0	2204,-		
			8x18	50	Image Legend	45	45	0	2276,-	**OE-fit**	B,D
			8x18	92	Image Colt L.Gun	45	45	0	2296,-		
			7,5x19	2	Nitro Sapphire FF	45	45	0	4572,-		
			8x19	16	Advanti Inizio DST	45	45	0	4412,-		
			8,5x19	5	Nitro Volcano G.Gun	45	45	0	4388,-		M
			8,5x19	6	Nitro Volcano	45	45	0	4632,-		M
			8,5x19	9	Nitro Sabre G.Blk	45	45	0	4292,-		M
			8,5x19	36	Image Colt	45	45	0	3028,-		M
			8,5x19	92	Image Colt L.Gun	45	45	0	2876,-		M
			8x20	2	Nitro Sapphire FF	45	45	0	5096,-		
			8,5x20	5	Nitro Volcano G.Gun	45	45	0	4824,-		M
			8,5x20	6	Nitro Volcano	45	45	0	5164,-		M
			8,5x20	7	Nitro Spark G.Blk/Grey	45	45	0	4660,-		M
			8,5x20	8	Nitro Spark G.Blk/Red	45	45	0	4660,-		M
			8,5x20	9	Nitro Sabre G.Blk	45	45	0	4800,-		M
			8,5x20	36	Image Colt	45	45	0	3432,-		M
			8,5x20	92	Image Colt L.Gun	45	45	0	3276,-		M
TOYOTA				PCD: **5-114,3** Bolt - Mutter: **12x1,50**	CB: **60,1**						
Camry (XV7)	11.17-	17-21	7,5x17	9	Nitro Sabre G.Blk	45	45	0	3052,-		
			7,5x17	34	CSP 16	40	45	10	1836,-	**OE-fit**	B,D
			7,5x17	35	CSP 16 M.Gun	40	45	10	1836,-	**OE-fit**	B,D
			7,5x17	36	Image Colt	45	45	0	1956,-		
			7,5x17	50	Image Legend	45	45	0	1812,-	**OE-fit**	B,D
			7,5x17	92	Image Colt L.Gun	45	45	0	1876,-		
			7,5x18	2	Nitro Sapphire FF	45	45	0	3944,-		
			7,5x18	34	CSP 16	45	45	0	2444,-	**OE-fit**	B,D
			7,5x18	35	CSP 16 M.Gun	45	45	0	2444,-	**OE-fit**	B,D
			7,5x18	46	Image Stella	45	45	0	2276,-	**OE-fit**	B,D
			7,5x18	47	Image Stella M.Blk	45	45	0	2276,-	**OE-fit**	B,D
			8x18	7	Nitro Spark G.Blk/Grey	45	45	0	3476,-		
			8x18	8	Nitro Spark G.Blk/Red	45	45	0	3476,-		
			8x18	9	Nitro Sabre G.Blk	45	45	0	3496,-		
			8x18	16	Advanti Inizio DST	45	45	0	3828,-		
			8x18	36	Image Colt	45	45	0	2412,-		
			8x18	48	Image Motion	45	45	0	2204,-		
			8x18	49	Image Motion G.Gun	45	45	0	2204,-		
			8x18	50	Image Legend	45	45	0	2276,-	**OE-fit**	B,D
			8x18	92	Image Colt L.Gun	45	45	0	2296,-		
			7,5x19	2	Nitro Sapphire FF	45	45	0	4572,-		
			8x19	16	Advanti Inizio DST	45	45	0	4412,-		
			8,5x19	5	Nitro Volcano G.Gun	45	45	0	4388,-		
			8,5x19	6	Nitro Volcano	45	45	0	4632,-		
			8,5x19	9	Nitro Sabre G.Blk	45	45	0	4292,-		
			8,5x19	36	Image Colt	45	45	0	3028,-		
			8,5x19	92	Image Colt L.Gun	45	45	0	2876,-		
			8x20	2	Nitro Sapphire FF	45	45	0	5096,-		
			8,5x20	1	Nitro Throne FF	40	45	10	5060,-		M
			8,5x20	5	Nitro Volcano G.Gun	45	45	0	4824,-		
			8,5x20	6	Nitro Volcano	45	45	0	5164,-		
			8,5x20	7	Nitro Spark G.Blk/Grey	45	45	0	4660,-		
			8,5x20	8	Nitro Spark G.Blk/Red	45	45	0	4660,-		
			8,5x20	9	Nitro Sabre G.Blk	45	45	0	4800,-		
			8,5x20	36	Image Colt	45	45	0	3432,-		
			8,5x20	92	Image Colt L.Gun	45	45	0	3276,-		
			9x21	5	Nitro Volcano G.Gun	45	45	0	5540,-		M
			9x21	6	Nitro Volcano	45	45	0	5996,-		M

Bilmerke - Bilmodell	Årsmodell	Dimensjon	Felgdim.	Bilde	Felgmodell	ET Felg	ET Bil	Avvik ET	Veil. Pris eks. MVA	Merknader	B,C D, M
TOYOTA			PCD: **5-112** Bolt - Mutter: **14x1,25B**			CB: **66,5**					
Supra (A90)	01.19-	17-20	7,5x17	22	ATS Evolution	27	32	10	2268,-	**OE-fit**	B,D
			7,5x17	23	ATS Evolution G.Grey	27	32	10	2340,-	**OE-fit**	B,D
			7,5x17	26	CSP 18 G.Blk/pol	27	32	10	2272,-	**OE-fit**	B,D
			7,5x17	27	CSP 18	27	32	10	2200,-	**OE-fit**	B,D
			7,5x17	28	CSP 18 G.Blk	27	32	10	2200,-	**OE-fit**	B,D
			7,5x17	46	Image Stella	27	32	10	1812,-	**OE-fit**	B,D
			7,5x17	47	Image Stella M.Blk	27	32	10	1812,-	**OE-fit**	B,D
			7,5x17	50	Image Legend	27	32	10	1812,-	**OE-fit**	B,D
			8x17	17	BM Drive M.Gun	25	32	14	1736,-		D
			8x18	2	Nitro Sapphire FF	30	32	4	4036,-	**OE-fit**	B,D
			8x18	11	Nitro Demon	25	32	14	2784,-		D
			8x18	16	Advanti Inizio DST	30	32	4	3828,-	**OE-fit**	B,D
			8x18	17	BM Drive M.Gun	25	32	14	2296,-		D
			8x18	22	ATS Evolution	30	32	4	3016,-	**OE-fit**	B,D
			8x18	23	ATS Evolution G.Grey	30	32	4	3116,-	**OE-fit**	B,D
			8x18	26	CSP 18 G.Blk/pol	30	32	4	2956,-	**OE-fit**	B,D
			8x18	27	CSP 18	30	32	4	2972,-	**OE-fit**	B,D
			8x18	28	CSP 18 G.Blk	30	32	4	2972,-	**OE-fit**	B,D
			8x18	46	Image Stella	30	32	4	2276,-	**OE-fit**	B,D
			8x18	47	Image Stella M.Blk	30	32	4	2276,-	**OE-fit**	B,D
			8x18	50	Image Legend	30	32	4	2276,-	**OE-fit**	B,D
			9x18	16	Advanti Inizio DST	40	40	0	3828,-	**OE-fit**, kun bak	B,D
			8x19	2	Nitro Sapphire FF	30	32	4	4684,-	**OE-fit**	B,D
			8x19	3	Nitro Turismo FF	30	32	4	4492,-	**OE-fit**	B,D
			8x19	4	Nitro Turismo FF G.Gun/Pol	30	32	4	4644,-	**OE-fit**	B,D
			8x19	11	Nitro Demon	25	32	14	3376,-		D
			8x19	16	Advanti Inizio DST	30	32	4	4412,-	**OE-fit**	B,D
			8x19	22	ATS Evolution	30	32	4	3892,-	**OE-fit**	B,D
			8x19	23	ATS Evolution G.Grey	30	32	4	4008,-	**OE-fit**	B,D
			8x19	26	CSP 18 G.Blk/pol	30	32	4	3596,-	**OE-fit**	B,D
			8x19	27	CSP 18	30	32	4	3444,-	**OE-fit**	B,D
			8x19	28	CSP 18 G.Blk	30	32	4	3444,-	**OE-fit**	B,D
			8,5x19	5	Nitro Volcano G.Gun	26	32	12	4388,-	**OE-fit**	B,D
			8,5x19	6	Nitro Volcano	26	32	12	4632,-	**OE-fit**	B,D
			9x19	10	Nitro Demon H.Slv	28	32	8	3624,-		D
			9x19	11	Nitro Demon	28	32	8	3376,-		D
			9x19	12	Nitro Edge M.Blk	25	32	14	3884,-		D
			9x19	26	CSP 18 G.Blk/pol	38	40	4	3596,-	**OE-fit**, kun bak	B,D
			9x19	27	CSP 18	38	40	4	3444,-	**OE-fit**, kun bak	B,D
			9x19	28	CSP 18 G.Blk	38	40	4	3444,-	**OE-fit**, kun bak	B,D
			9,5x19	5	Nitro Volcano G.Gun	40	40	0	4388,-	**OE-fit**, kun bak	B,D
			9,5x19	6	Nitro Volcano	40	40	0	4632,-	**OE-fit**, kun bak	B,D
			9,5x19	16	Advanti Inizio DST	40	40	0	4412,-	**OE-fit**, kun bak	B,D,M
			8,5x20	1	Nitro Throne FF	30	32	4	5060,-	**OE-fit**	B,D
			8,5x20	2	Nitro Sapphire FF	30	32	4	5216,-	**OE-fit**	B,D
			8,5x20	11	Nitro Demon	25	32	14	3808,-		D
			9x20	3	Nitro Turismo FF	30	32	4	4960,-	**OE-fit**	B,D
			9x20	4	Nitro Turismo FF G.Gun/Pol	30	32	4	5048,-	**OE-fit**	B,D
			9x20	5	Nitro Volcano G.Gun	26	32	12	4824,-	**OE-fit**	B,D
			9x20	6	Nitro Volcano	26	32	12	5164,-	**OE-fit**	B,D
			9x20	10	Nitro Demon H.Slv	30	32	4	4104,-		D
			9x20	11	Nitro Demon	30	32	4	3808,-		D
			9x20	12	Nitro Edge M.Blk	25	32	14	4220,-		D
			10x20	1	Nitro Throne FF	40	40	0	5308,-	Kun bak	D
			10,5x20	3	Nitro Turismo FF	40	40	0	5116,-	**OE-fit**, kun bak	B,D
			10,5x20	4	Nitro Turismo FF G.Gun/Pol	40	40	0	5288,-	**OE-fit**, kun bak	B,D
			10,5x20	5	Nitro Volcano G.Gun	36	40	8	4824,-	**OE-fit**, kun bak	B,D
			10,5x20	6	Nitro Volcano	36	40	8	5164,-	**OE-fit**, kun bak	B,D
TOYOTA			PCD: **5-114,3** Bolt - Mutter: **12x1,50**			CB: **60,1**					
Rav-4 (A2)	06.00-02.06	16-20	6,5x16	34	CSP 16	39	45	12	1468,-	**OE-fit**, Toyota orig. mutter	B,D
Rav-4 (XA3)	03.06-01.13	16-20	6,5x16	35	CSP 16 M.Gun	39	45	12	1468,-	**OE-fit**, Toyota orig. mutter	B,D
Rav-4 (XA3)	02.13-12.15	17-22	6,5x16	36	Image Colt	45	45	0	1624,-		
Rav-4 (XA3)	01.16-10.18	17-22	6,5x16	46	Image Stella	39	45	12	1548,-	**OE-fit**	B,D
(Facelift)			6,5x16	47	Image Stella M.Blk	39	45	12	1548,-	**OE-fit**	B,D
Sienna (XL30)	01.10-	18-20	6,5x16	48	Image Motion	39	45	12	1468,-	**OE-fit**, Toyota orig. mutter	B,D
			6,5x16	49	Image Motion G.Gun	39	45	12	1468,-	**OE-fit**	B,D
			6,5x16	50	Image Legend	39	45	12	1544,-	**OE-fit**	B,D
			6,5x16	92	Image Colt L.Gun	45	45	0	1548,-		
			7x16	17	BM Drive M.Gun	39	45	12	1476,-	**OE-fit**, Toyota orig. mutter	B,D
			7x16	40	Image Spirit	40	45	10	1264,-	**OE-fit**	B,D
			7x17	17	BM Drive M.Gun	40	45	10	1736,-	**OE-fit**, Toyota orig. mutter	B,D
			7x17	34	CSP 16	45	45	0	1836,-	**OE-fit**, Toyota orig. mutter	B,D
			7x17	35	CSP 16 M.Gun	45	45	0	1836,-	**OE-fit**, Toyota orig. mutter	B,D
			7x17	40	Image Spirit	45	45	0	1476,-	**OE-fit**	B,D
			7x17	46	Image Stella	45	45	0	1812,-	**OE-fit**	B,D
			7x17	47	Image Stella M.Blk	45	45	0	1812,-	**OE-fit**	B,D
			7x17	48	Image Motion	45	45	0	1736,-	**OE-fit**, Toyota orig. mutter	B,D
			7x17	49	Image Motion G.Gun	45	45	0	1736,-	**OE-fit**	B,D
			7,5x17	9	Nitro Sabre G.Blk	45	45	0	3052,-		
			7,5x17	36	Image Colt	45	45	0	1956,-		
			7,5x17	50	Image Legend	45	45	0	1812,-	**OE-fit**	B,D
			7,5x17	92	Image Colt L.Gun	45	45	0	1876,-		
			7,5x18	2	Nitro Sapphire FF	45	45	0	3944,-		
			7,5x18	34	CSP 16	45	45	0	2444,-	**OE-fit**, Toyota orig. mutter	B,D
			7,5x18	35	CSP 16 M.Gun	45	45	0	2444,-	**OE-fit**, Toyota orig. mutter	B,D
			7,5x18	46	Image Stella	45	45	0	2276,-	**OE-fit**	B,D

Forts. neste side »

Bilmerke - Bilmodell	Årsmodell	Dimensjon	Felgdim.	Bilde	Felgmodell	ET Felg	ET Bil	Avvik ET	Veil. Pris eks. MVA	Merknader	B,C D, M
TOYOTA (forts.)				PCD: **5-114,3** Bolt - Mutter: **12x1,50**		CB: **60,1**					
			7,5x18	47	Image Stella M.Blk	45	45	0	2276,-	**OE-fit**	B,D
			8x18	7	Nitro Spark G.Blk/Grey	45	45	0	3476,-		
			8x18	8	Nitro Spark G.Blk/Red	45	45	0	3476,-		
			8x18	9	Nitro Sabre G.Blk	45	45	0	3496,-		
			8x18	11	Nitro Demon	48	45	-6	2784,-		
			8x18	16	Advanti Inizio DST	45	45	0	3828,-		
			8x18	36	Image Colt	45	45	0	2412,-		
			8x18	48	Image Motion	45	45	0	2204,-		
			8x18	49	Image Motion G.Gun	45	45	0	2204,-		
			8x18	50	Image Legend	45	45	0	2276,-	**OE-fit**	B,D
			8x18	92	Image Colt L.Gun	45	45	0	2296,-		
			7,5x19	2	Nitro Sapphire FF	45	45	0	4572,-		
			8x19	16	Advanti Inizio DST	45	45	0	4412,-		
			8,5x19	5	Nitro Volcano G.Gun	45	45	0	4388,-		
			8,5x19	6	Nitro Volcano	45	45	0	4632,-		
			8,5x19	9	Nitro Sabre G.Blk	45	45	0	4292,-		
			8,5x19	36	Image Colt	45	45	0	3028,-		
			8,5x19	92	Image Colt L.Gun	45	45	0	2876,-		
			8x20	2	Nitro Sapphire FF	45	45	0	5096,-		
			8,5x20	1	Nitro Throne FF	40	45	10	5060,-		M
			8,5x20	5	Nitro Volcano G.Gun	45	45	0	4824,-		
			8,5x20	6	Nitro Volcano	45	45	0	5164,-		
			8,5x20	7	Nitro Spark G.Blk/Grey	45	45	0	4660,-		
			8,5x20	8	Nitro Spark G.Blk/Red	45	45	0	4660,-		
			8,5x20	9	Nitro Sabre G.Blk	45	45	0	4800,-		
			8,5x20	36	Image Colt	45	45	0	3432,-		
			8,5x20	92	Image Colt L.Gun	45	45	0	3276,-		
			9x21	5	Nitro Volcano G.Gun	45	45	0	5540,-		M
			9x21	6	Nitro Volcano	45	45	0	5996,-		M
TOYOTA				PCD: **5-114,3** Bolt - Mutter: **12x1,50**		CB: **60,1**					
Rav-4 (XA5)	11.18-	17-22	7x17	34	CSP 16	35	39	8	1836,-	**OE-fit**	B,D
			7x17	35	CSP 16 M.Gun	35	39	8	1836,-	**OE-fit**	B,D
			7x17	46	Image Stella	38	39	2	1812,-		B
			7x17	47	Image Stella M.Blk	38	39	2	1812,-		B
			7,5x17	9	Nitro Sabre G.Blk	35	39	8	3052,-		
			7,5x17	34	CSP 16	40	39	-2	1836,-	**OE-fit**	B,D
			7,5x17	35	CSP 16 M.Gun	40	39	-2	1836,-	**OE-fit**	B,D
			7,5x17	36	Image Colt	35	39	8	1956,-		
			7,5x17	92	Image Colt L.Gun	35	39	8	1876,-		
			7,5x18	2	Nitro Sapphire FF	35	39	8	3944,-		
			7,5x18	34	CSP 16	35	39	8	2444,-	**OE-fit**	B,D
			7,5x18	35	CSP 16 M.Gun	35	39	8	2444,-	**OE-fit**	B,D
			7,5x18	46	Image Stella	38	39	2	2276,-		B
			7,5x18	47	Image Stella M.Blk	38	39	2	2276,-		B
			8x18	7	Nitro Spark G.Blk/Grey	35	39	8	3476,-		
			8x18	8	Nitro Spark G.Blk/Red	35	39	8	3476,-		
			8x18	9	Nitro Sabre G.Blk	35	39	8	3496,-		
			8x18	10	Nitro Demon H.Slv	30	39	18	2972,-	**OE-fit**	B,D
			8x18	11	Nitro Demon	30	39	18	2784,-	**OE-fit**	B,D
			8x18	16	Advanti Inizio DST	35	39	8	3828,-		
			8x18	36	Image Colt	35	39	8	2412,-		B
			8x18	92	Image Colt L.Gun	35	39	8	2296,-		
			7,5x19	2	Nitro Sapphire FF	35	39	8	4572,-		
			8x19	11	Nitro Demon	38	39	2	3376,-		
			8x19	16	Advanti Inizio DST	35	39	8	4412,-		
			8,5x19	5	Nitro Volcano G.Gun	35	39	8	4388,-		
			8,5x19	6	Nitro Volcano	35	39	8	4632,-		
			8,5x19	9	Nitro Sabre G.Blk	35	39	8	4292,-		
			8,5x19	36	Image Colt	35	39	8	3028,-		
			8,5x19	92	Image Colt L.Gun	35	39	8	2876,-		
			8x20	2	Nitro Sapphire FF	35	39	8	5096,-		
			8,5x20	1	Nitro Throne FF	40	39	-2	5060,-		
			8,5x20	5	Nitro Volcano G.Gun	35	39	8	4824,-		
			8,5x20	6	Nitro Volcano	35	39	8	5164,-		
			8,5x20	7	Nitro Spark G.Blk/Grey	35	39	8	4660,-		
			8,5x20	8	Nitro Spark G.Blk/Red	35	39	8	4660,-		
			8,5x20	9	Nitro Sabre G.Blk	35	39	8	4800,-		
			8,5x20	11	Nitro Demon	30	39	18	3808,-	**OE-fit**	B,D
			8,5x20	36	Image Colt	35	39	8	3432,-		
			8,5x20	92	Image Colt L.Gun	35	39	8	3276,-		
			9x21	5	Nitro Volcano G.Gun	35	39	8	5540,-		M
			9x21	6	Nitro Volcano	35	39	8	5996,-		M
TOYOTA				PCD: **6-139,7** Bolt - Mutter: **12x1,50**		CB: **106,0**					
FJ Cruiser	06-12.14	17-22	7,5x17	68	BM Macho	25	16	-18	2756,-		
			7,5x17	69	BM Macho M.Blk	25	16	-18	2756,-		
			9x17	74	Ballistic Morax	12	16	8	4020,-		
			8x18	68	BM Macho	20	16	-8	3300,-		
			8x18	69	BM Macho M.Blk	20	16	-8	3300,-		
			9x18	74	Ballistic Morax	12	16	8	4276,-		
			9x20	68	BM Macho	20	16	-8	4288,-		
			9x20	69	BM Macho M.Blk	20	16	-8	4288,-		
			9x20	72	Ballistic Dakota	25	16	-18	4624,-		
			9x20	74	Ballistic Morax	12	16	8	4740,-		
			9x22	72	Ballistic Dakota	25	16	-18	5128,-		

Bilmerke - Bilmodell	Årsmodell	Dimensjon	Felgdim.	Bilde	Felgmodell	ET Felg	ET Bil	Avvik ET	Veil. Pris eks. MVA	Merknader	B,C D, M
TOYOTA				PCD: **6-139,7** Bolt - Mutter: **12x1,50**	CB: **106,0**						
Land Cruiser (J90)	09.96-12.02	16-22	8x16	78	Advanti Peak	5	30	50	2692,-		
			7,5x17	68	BM Macho	25	30	10	2756,-		
			7,5x17	69	BM Macho M.Blk	25	30	10	2756,-		
			9x17	74	Ballistic Morax	12	30	36	4020,-		M
			8x18	68	BM Macho	20	30	20	3300,-		
			8x18	69	BM Macho M.Blk	20	30	20	3300,-		
			9x18	74	Ballistic Morax	12	30	36	4276,-		M
			9x20	68	BM Macho	20	30	20	4288,-		
			9x20	69	BM Macho M.Blk	20	30	20	4288,-		
			9x20	72	Ballistic Dakota	25	30	10	4624,-		
			9x20	74	Ballistic Morax	12	30	36	4740,-		M
			9x22	72	Ballistic Dakota	25	30	10	5128,-		
TOYOTA				PCD: **6-139,7** Bolt - Mutter: **12x1,50**	CB: **106,0**						
Land Cruiser (J120)	01.03-10.09	17-24	7,5x17	67	Image Rock	20	30	20	2796,-		
Land Cruiser (J150)	11.09-	17-24	7,5x17	68	BM Macho	25	30	10	2756,-		
			7,5x17	69	BM Macho M.Blk	25	30	10	2756,-		
			9x17	74	Ballistic Morax	12	30	36	4020,-		M
			7,5x18	67	Image Rock	20	30	20	3324,-		
			8x18	68	BM Macho	20	30	20	3300,-		
			8x18	69	BM Macho M.Blk	20	30	20	3300,-		
			9x18	74	Ballistic Morax	12	30	36	4276,-		M
			9x20	68	BM Macho	20	30	20	4288,-		
			9x20	69	BM Macho M.Blk	20	30	20	4288,-		
			9x20	72	Ballistic Dakota	25	30	10	4624,-		
			9x20	74	Ballistic Morax	12	30	36	4740,-		M
			9x22	72	Ballistic Dakota	25	30	10	5128,-		
TOYOTA				PCD: **6-139,7** Bolt - Mutter: **12x1,50**	CB: **67,1**						
Hi-Ace 2wd	11.95-11.11	15-16	6x15	65	CSP Work	27	29	4	2196,-	Maks bel. 955 kg	
			7x16	68	BM Macho	25	29	8	2396,-		
			7x16	69	BM Macho M.Blk	25	29	8	2396,-		
TOYOTA				PCD: **6-139,7** Bolt - Mutter: **12x1,50**	CB: **106,0**						
Hi-Ace 4wd	11.95-11.11	15-18	7x16	68	BM Macho	25	30	10	2396,-		
			7x16	69	BM Macho M.Blk	25	30	10	2396,-		
TOYOTA				PCD: **5-108** Bolt - Mutter: **12x1,25B**	CB: **65,1**						
Proace City	04.20-	15-20	6x15	17	BM Drive M.Gun	40	47	14	1276,-		D
1.2, 1.5HDI (75, 81, 96kW) 16"			6x15	48	Image Motion	40	47	14	1224,-		D
Proace City Verso	04.20-	16-20	6x15	49	Image Motion G.Gun	40	47	14	1224,-		D
			6,5x16	36	Image Colt	40	47	14	1624,-		D
			6,5x16	48	Image Motion	47	47	0	1468,-	**OE-fit**	B,D
			6,5x16	54	Image Vector	46	47	2	1956,-	**OE-fit**	B,D
			6,5x16	55	Image Vector Slv	46	47	2	1956,-	**OE-fit**	B,D
			6,5x16	92	Image Colt L.Gun	40	47	14	1548,-		D
			7x16	17	BM Drive M.Gun	40	47	14	1476,-		D
			7x16	46	Image Stella	40	47	14	1548,-		D
			7x16	47	Image Stella M.Blk	40	47	14	1548,-		D
			7x16	48	Image Motion	40	47	14	1468,-		D
			7x16	49	Image Motion G.Gun	40	47	14	1468,-		D
			7x16	50	Image Legend	40	47	14	1544,-		D
			7x17	46	Image Stella	42	47	10	1812,-		D
			7x17	47	Image Stella M.Blk	42	47	10	1812,-		D
			7x17	54	Image Vector	46	47	2	2576,-	**OE-fit**	B,D
			7x17	55	Image Vector Slv	46	47	2	2576,-	**OE-fit**	B,D
			7,5x17	36	Image Colt	40	47	14	1956,-		D
			7,5x17	50	Image Legend	40	47	14	1812,-		D
			7,5x17	92	Image Colt L.Gun	40	47	14	1876,-		D
			8x17	17	BM Drive M.Gun	45	47	4	1736,-		D
			8x17	48	Image Motion	45	47	4	1736,-		D
			8x18	7	Nitro Spark G.Blk/Grey	45	47	4	3476,-		D
			8x18	8	Nitro Spark G.Blk/Red	45	47	4	3476,-		D
			8x18	11	Nitro Demon	40	47	14	2784,-		D
			8x18	17	BM Drive M.Gun	45	47	4	2296,-		D
			8x18	36	Image Colt	42	47	10	2412,-		D
			8x18	48	Image Motion	45	47	4	2204,-		D
			8x18	53	Nitro Hammer	42	47	10	3256,-		D
			8x18	92	Image Colt L.Gun	42	47	10	2296,-		D
			8x19	11	Nitro Demon	40	47	14	3376,-		D
			8x19	48	Image Motion	45	47	4	2532,-		D
			8,5x19	36	Image Colt	42	47	10	3028,-		D,M
			8,5x19	92	Image Colt L.Gun	42	47	10	2876,-		D,M
			8,5x20	7	Nitro Spark G.Blk/Grey	45	47	4	4660,-		D
			8,5x20	8	Nitro Spark G.Blk/Red	45	47	4	4660,-		D
			8,5x20	11	Nitro Demon	45	47	4	3808,-		D
			8,5x20	36	Image Colt	42	47	10	3432,-		D,M
			8,5x20	53	Nitro Hammer	42	47	10	4268,-		D
			8,5x20	92	Image Colt L.Gun	42	47	10	3276,-		D,M
TOYOTA				PCD: **5-108** Bolt - Mutter: **12x1,25B**	CB: **65,1**						
Proace	05.13-05.16	16-19	8x18	53	Nitro Hammer	42	42	0	3256,-		D
TOYOTA				PCD: **5-108** Bolt - Mutter: **12x1,25B**	CB: **65,1**						
Proace	06.16-	16-20	6,5x16	54	Image Vector	46	46	0	1956,-	**OE-fit**, Maks bel. 900 kg	B,D
2.0D-4D (130kW) 17"			6,5x16	55	Image Vector Slv	46	46	0	1956,-	**OE-fit**	B,D
Proace Verso	09.16-	16-20	7x17	54	Image Vector	46	46	0	2576,-	**OE-fit**	B,D
2.0D-4D (130kW) 17"			7x17	55	Image Vector Slv	46	46	0	2576,-	**OE-fit**	B,D
			8x18	53	Nitro Hammer	42	46	8	3256,-		D
			8,5x20	53	Nitro Hammer	42	46	8	4268,-	Maks bel. 880 kg	D

Bilmerke - Bilmodell	Årsmodell	Dimensjon	Felgdim.	Bilde	Felgmodell	ET Felg	ET Bil	Avvik ET	Veil. Pris eks. MVA	Merknader	B,C D, M
TOYOTA				PCD: **6-139,7** Bolt - Mutter: **12x1,50** CB: **106,0**							
Hi-Lux 4wd	99-12.05	15-22	9x17	74	Ballistic Morax	12	8	-8	4020,-		M
Sequoia	01-07	16-22	8x18	68	BM Macho	20	8	-24	3300,-		
Tacoma	01.95-08.04	16-22	8x18	69	BM Macho M.Blk	20	8	-24	3300,-		
Tundra	05.99-11.06	17-22	9x18	74	Ballistic Morax	12	8	-8	4276,-		M
			9x20	68	BM Macho	20	8	-24	4288,-		
			9x20	69	BM Macho M.Blk	20	8	-24	4288,-		
			9x20	74	Ballistic Morax	12	8	-8	4740,-		M
TOYOTA				PCD: **6-139,7** Bolt - Mutter: **12x1,50** CB: **106,0**							
Hi-Lux	06.16-	17-22	7x16	68	BM Macho	25	30	10	2396,-		
Hi-Lux 4wd	01.06-05.16	15-22	7x16	69	BM Macho M.Blk	25	30	10	2396,-		
3.0D 16"			8x16	78	Advanti Peak	5	30	50	2692,-		
Tacoma	08.04-08.15	16-22	7,5x17	67	Image Rock	20	30	20	2796,-		
			7,5x17	68	BM Macho	25	30	10	2756,-		
			7,5x17	69	BM Macho M.Blk	25	30	10	2756,-		
			9x17	74	Ballistic Morax	12	30	36	4020,-		M
			7,5x18	67	Image Rock	20	30	20	3324,-		
			8x18	68	BM Macho	20	30	20	3300,-		
			8x18	69	BM Macho M.Blk	20	30	20	3300,-		
			9x18	74	Ballistic Morax	12	30	36	4276,-		M
			9x20	68	BM Macho	20	30	20	4288,-		
			9x20	69	BM Macho M.Blk	20	30	20	4288,-		
			9x20	72	Ballistic Dakota	25	30	10	4624,-		
			9x20	74	Ballistic Morax	12	30	36	4740,-		M
			9x22	72	Ballistic Dakota	25	30	10	5128,-		
TRUCKMASTERS				PCD: **6-139,7** Bolt - Mutter: **12x1,50** CB: **106,0**							
OX	06.16-	17-22	9x17	74	Ballistic Morax	12	30	36	4020,-		M
			9x18	74	Ballistic Morax	12	30	36	4276,-		M
			9x20	74	Ballistic Morax	12	30	36	4740,-		M
VOLKSWAGEN				PCD: **4-100** Bolt - Mutter: **12x1,50 B** CB: **57,1**							
Cross Up (AA)	10.13-	14-18	5x14	37	Image Comet	35	35	0	1264,-	**OE-fit**	B,D
e-Up (AA)	09.13-	14-15	5,5x14	37	Image Comet	30	35	10	1264,-	**OE-fit**	B,D
Up (AA)	09.11-	14-17	5,5x14	38	Image Comet Slv	30	35	10	1264,-	**OE-fit**	B,D
Up (AA) GTI	01.18-	15-18	6x15	19	ATS Streetrallye Slv	38	35	-6	1960,-		
			6x15	37	Image Comet	40	35	-10	1316,-	**OE-fit**	B,D
			6x15	38	Image Comet Slv	40	35	-10	1316,-	**OE-fit**	B,D
			6x15	42	Image Brio	40	35	-10	1304,-		
			6x15	45	Image Ride	38	35	-6	1552,-		
			6x16	37	Image Comet	40	35	-10	1536,-		
			6x16	38	Image Comet Slv	40	35	-10	1536,-		
			6,5x16	19	ATS Streetrallye Slv	40	35	-10	2240,-		
			6,5x16	34	CSP 16	40	35	-10	1468,-		
			6,5x16	42	Image Brio	38	35	-6	1524,-		
			7x17	42	Image Brio	40	35	-10	1832,-		
VOLKSWAGEN				PCD: **5-100** Bolt - Mutter: **14x1,50B** CB: **57,1**							
Cross Polo (6R)	09.09-12.15	15-18	5,5x14	45	Image Ride	38	43	10	1392,-	**OE-fit**	B,D
Cross Polo (9N)	02.06-08.09	15-18	6x15	17	BM Drive M.Gun	38	43	10	1276,-		D
Fox (5Z)	04.05-04.11	14-18	6x15	20	ATS Antares	38	43	10	1496,-	**OE-fit**	B,C,D
Polo (6R)	09.09-08.17	14-18	6x15	21	ATS Antares G.Blk	38	43	10	1568,-	**OE-fit**	B,C,D
1.2TSI (77kW), 1.6TDI (77kW) 15"			6x15	29	CSP 13	38	43	10	1468,-	**OE-fit**	B,C,D
GTI 15"			6x15	30	CSP 13 M.Gun	38	43	10	1468,-	**OE-fit**	B,C,D
Polo (6R) GTI	06.10-10.12	15-18	6x15	45	Image Ride	38	43	10	1552,-	**OE-fit**	B,D
Polo (6R) GTI	11.12-12.17	16-18	6x15	48	Image Motion	38	43	10	1224,-	**OE-fit**	B,D
Polo (6R) R WRC	08.13-10.13	17-18	6x15	49	Image Motion G.Gun	38	43	10	1224,-	**OE-fit**	B,D
Polo (9N)	11.01-08.09	14-18	6,5x16	29	CSP 13	35	43	16	1716,-	**OE-fit**	B,C,D
GTI 06- 15"			6,5x16	30	CSP 13 M.Gun	35	43	16	1716,-	**OE-fit**	B,C,D
			6,5x16	36	Image Colt	40	43	6	1624,-		
			6,5x16	48	Image Motion	38	43	10	1468,-	**OE-fit**	B,D
			6,5x16	49	Image Motion G.Gun	38	43	10	1468,-	**OE-fit**	B,D
			6,5x16	92	Image Colt L.Gun	40	43	6	1548,-		
			7x17	29	CSP 13	35	43	16	2152,-	**OE-fit**	B,C,D
			7x17	30	CSP 13 M.Gun	35	43	16	2152,-	**OE-fit**	B,C,D
			7,5x17	16	Advanti Inizio DST	42	43	2	3324,-	**OE-fit**	B,D
			8x18	16	Advanti Inizio DST	42	43	2	3828,-	**OE-fit**	B,D,M
VOLKSWAGEN				PCD: **5-100** Bolt - Mutter: **14x1,50B** CB: **57,1**							
Polo (AW)	09.17-	14-19	5,5x14	45	Image Ride	38	40	4	1392,-	**OE-fit**	B,D
1.0 66kW, 1.0TGI 15"			6x15	17	BM Drive M.Gun	38	40	4	1276,-	**OE-fit**	B,D
1.6TDI 15"			6x15	20	ATS Antares	38	40	4	1496,-	**OE-fit**	B,C,D
			6x15	21	ATS Antares G.Blk	38	40	4	1568,-	**OE-fit**	B,C,D
			6x15	29	CSP 13	38	40	4	1468,-	**OE-fit**	B,C,D
			6x15	30	CSP 13 M.Gun	38	40	4	1468,-	**OE-fit**	B,C,D
			6x15	45	Image Ride	38	40	4	1552,-	**OE-fit**	B,D
			6x15	48	Image Motion	38	40	4	1224,-	**OE-fit**	B,D
			6x15	49	Image Motion G.Gun	38	40	4	1224,-	**OE-fit**	B,D
			6,5x16	29	CSP 13	45	40	-10	1716,-	**OE-fit**	B,C,D
			6,5x16	30	CSP 13 M.Gun	45	40	-10	1716,-	**OE-fit**	B,C,D
			6,5x16	36	Image Colt	40	40	0	1624,-		
			6,5x16	46	Image Stella	43	40	-6	1548,-	**OE-fit**	B,D
			6,5x16	47	Image Stella M.Blk	43	40	-6	1548,-	**OE-fit**	B,D
			6,5x16	48	Image Motion	38	40	4	1468,-	**OE-fit**	B,D
			6,5x16	49	Image Motion G.Gun	38	40	4	1468,-	**OE-fit**	B,D
			6,5x16	92	Image Colt L.Gun	40	40	0	1548,-		
			7x17	29	CSP 13	47	40	-14	2152,-	**OE-fit**	B,C,D
			7x17	30	CSP 13 M.Gun	47	40	-14	2152,-	**OE-fit**	B,C,D
			7x17	46	Image Stella	47	40	-14	1812,-	**OE-fit**	B,D
			7x17	47	Image Stella M.Blk	47	40	-14	1812,-	**OE-fit**	B,D

Forts. neste side »

Bilmerke - Bilmodell	Årsmodell	Dimensjon	Felgdim.	Bilde	Felgmodell	ET Felg	ET Bil	Avvik ET	Veil. Pris eks. MVA	Merknader	B,C D, M
VOLKSWAGEN (forts.)				PCD: **5-100** Bolt - Mutter: **14x1,50B**	CB: **57,1**						
			7,5x17	16	Advanti Inizio DST	42	40	-4	3324,-	**OE-fit**	B,D
			7,5x17	36	Image Colt	43	40	-6	1956,-		
			7,5x17	92	Image Colt L.Gun	43	40	-6	1876,-		
			8x18	16	Advanti Inizio DST	42	40	-4	3828,-	**OE-fit**	B,D,M
VOLKSWAGEN				PCD: **5-100** Bolt - Mutter: **14x1,50B**	CB: **57,1**						
Polo (AW) GTI	01.18-	16-20	6,5x16	29	CSP 13	45	47	4	1716,-	**OE-fit**	B,C,D
			6,5x16	30	CSP 13 M.Gun	45	47	4	1716,-	**OE-fit**	B,C,D
			6,5x16	36	Image Colt	40	47	14	1624,-		
			6,5x16	46	Image Stella	43	47	8	1548,-	**OE-fit**	B,D
			6,5x16	47	Image Stella M.Blk	43	47	8	1548,-	**OE-fit**	B,D
			6,5x16	48	Image Motion	38	47	18	1468,-	**OE-fit**	B,D
			6,5x16	49	Image Motion G.Gun	38	47	18	1468,-	**OE-fit**	B,D
			6,5x16	92	Image Colt L.Gun	40	47	14	1548,-		
			7x17	29	CSP 13	47	47	0	2152,-	**OE-fit**	B,C,D
			7x17	30	CSP 13 M.Gun	47	47	0	2152,-	**OE-fit**	B,C,D
			7x17	46	Image Stella	47	47	0	1812,-	**OE-fit**	B,D
			7x17	47	Image Stella M.Blk	47	47	0	1812,-	**OE-fit**	B,D
			7,5x17	16	Advanti Inizio DST	42	47	10	3324,-	**OE-fit**	B,D
			7,5x17	36	Image Colt	43	47	8	1956,-		
			7,5x17	92	Image Colt L.Gun	43	47	8	1876,-		
			8x18	16	Advanti Inizio DST	42	47	10	3828,-	**OE-fit**	B,D,M
			8x19	16	Advanti Inizio DST	42	47	10	4412,-	**OE-fit**	B,D,M
VOLKSWAGEN				PCD: **5-112** Bolt - Mutter: **14x1,50B**	CB: **57,1**						
Caddy	01.04-05.15	15-20	6x15	17	BM Drive M.Gun	43	47	8	1276,-		D
2.0 Naturgas (80kW) 16"			6x15	20	ATS Antares	43	47	8	1496,-	**OE-fit**	B,C,D
2.0TDI (103kW) 16"			6x15	21	ATS Antares G.Blk	43	47	8	1568,-	**OE-fit**	B,C,D
Caddy (2KN)	06.15-	15-20	6x15	29	CSP 13	43	47	8	1468,-	**OE-fit**	B,C,D
2.0TDI (110kW) 16"			6x15	30	CSP 13 M.Gun	43	47	8	1468,-	**OE-fit**	B,C,D
Caddy (2KN) alltrack	03.16-	16-20	6x15	45	Image Ride	43	47	8	1552,-	**OE-fit**	B,D
Caddy (2KN) Maxi	03.16-	15-20	6x15	48	Image Motion	43	47	8	1224,-	**OE-fit**	B,C,D
2.0TDI (110kW) 16"			6x15	49	Image Motion G.Gun	43	47	8	1224,-	**OE-fit**	B,C,D
Cross Golf	03.07-08.09	16-20	6,5x16	20	ATS Antares	46	47	2	1852,-	**OE-fit**	B,D
Cross Golf (1KP)	06.10-10.12	15-20	6,5x16	21	ATS Antares G.Blk	46	47	2	1896,-	**OE-fit**	B,D
1.4TSI (118kW), 2.0TDI 16"			6,5x16	26	CSP 18 G.Blk/pol	46	47	2	1896,-		
Cross Touran (1T)	04.07-08.15	16-20	6,5x16	27	CSP 18	46	47	2	1760,-		
e-Golf (AU)	03.14-	15-20	6,5x16	28	CSP 18 G.Blk	46	47	2	1760,-		
Golf (1K) V	10.03-09.08	15-20	6,5x16	29	CSP 13	46	47	2	1716,-	**OE-fit**	B,C,D
2.0TDi (125kW) 16"			6,5x16	30	CSP 13 M.Gun	46	47	2	1716,-	**OE-fit**	B,C,D
GT 16"			6,5x16	36	Image Colt	45	47	4	1624,-		B
Golf (1K) V GTI	12.04-09.08	16-20	6,5x16	40	Image Spirit	46	47	2	1264,-	**OE-fit**	B,D
Golf (1K) VI	10.08-10.12	15-20	6,5x16	46	Image Stella	46	47	2	1548,-	**OE-fit**	B,D
1.4 TSI (118kW) 16"			6,5x16	47	Image Stella M.Blk	46	47	2	1548,-	**OE-fit**	B,D
GTI/GTD 16"			6,5x16	48	Image Motion	46	47	2	1468,-	**OE-fit**	B,C,D
Golf (1KM) V variant	06.07-08.09	15-20	6,5x16	49	Image Motion G.Gun	46	47	2	1468,-	**OE-fit**	B,C,D
Golf (1KM) VI variant	09.09-07.13	15-20	6,5x16	50	Image Legend	46	47	2	1544,-	**OE-fit**	B,D
1.4TSI, 2.0TDI 16"			6,5x16	92	Image Colt L.Gun	45	47	4	1548,-		B
Golf (1KP) V plus	02.05-08.09	15-20	7x16	17	BM Drive M.Gun	45	47	4	1476,-		D
Golf (1KP) VI plus	09.09-03.14	15-20	7x16	20	ATS Antares	48	47	-2	1852,-	**OE-fit**	B,D
1.4TSI (118kW) 16"			7x16	21	ATS Antares G.Blk	48	47	-2	1896,-	**OE-fit**	B,D
2.0TDI (125kW) 16"			7,5x16	20	ATS Antares	45	47	4	1852,-		B
Golf (AU) VII	11.12-	15-20	7,5x16	21	ATS Antares G.Blk	45	47	4	1896,-		B
1.4TSI (103kW), 2.0TDI (110kW) 16"			7x17	17	BM Drive M.Gun	45	47	4	1736,-		D
GTD 16", GTI 17"			7x17	20	ATS Antares	49	47	-4	2264,-	**OE-fit**	B,C,D
Golf (AU) VII variant	08.13-	15-20	7x17	21	ATS Antares G.Blk	49	47	-4	2380,-	**OE-fit**	B,C,D
1.4TSI (103kW) 16"			7x17	29	CSP 13	48	47	-2	2152,-	**OE-fit**	B,C,D
2.0TDI (110kW) 16"			7x17	30	CSP 13 M.Gun	48	47	-2	2152,-	**OE-fit**	B,C,D
Golf (AUV) sportsvan	04.14-	15-20	7x17	40	Image Spirit	46	47	2	1476,-	**OE-fit**	B,D
Golf (CD) VIII	01.20-	15-20	7x17	46	Image Stella	46	47	2	1812,-	**OE-fit**	B,D
Jetta (16H)	03.11-01.18	15-20	7x17	47	Image Stella M.Blk	46	47	2	1812,-	**OE-fit**	B,D
1.4TSI (118kW) 16"			7x17	48	Image Motion	45	47	4	1736,-	**OE-fit**	B,C,D
Jetta (1KM)	08.05-03.11	15-20	7x17	49	Image Motion G.Gun	45	47	4	1736,-	**OE-fit**	B,C,D
1.8TSI, 2.0TDi (125kW) 16"			7,5x17	9	Nitro Sabre G.Blk	45	47	4	3052,-		B
2.0TFSI (147kW) 16"			7,5x17	16	Advanti Inizio DST	42	47	10	3324,-		B
Touran (1T)	03.03-08.10	15-20	7,5x17	20	ATS Antares	45	47	4	2264,-		B
2.0TDi (125kW) 16"			7,5x17	21	ATS Antares G.Blk	45	47	4	2380,-		B
Touran (1T)	09.15-	16-20	7,5x17	26	CSP 18 G.Blk/pol	52	47	-10	2272,-		
Touran (1T) Facelift	09.10-08.15	15-20	7,5x17	27	CSP 18	52	47	-10	2200,-		
1.4TSI (110/125kW) 16"			7,5x17	28	CSP 18 G.Blk	52	47	-10	2200,-		
2.0TDI (103/125kW) 16"			7,5x17	36	Image Colt	45	47	4	1956,-		B
			7,5x17	50	Image Legend	45	47	4	1812,-	**OE-fit**	B,D
			7,5x17	92	Image Colt L.Gun	45	47	4	1876,-		B
			8x17	17	BM Drive M.Gun	45	47	4	1736,-		
			8x17	48	Image Motion	45	47	4	1736,-		B,C
			7,5x18	2	Nitro Sapphire FF	48	47	-2	3944,-		B
			7,5x18	29	CSP 13	51	47	-8	2932,-	**OE-fit**	B,C,D
			7,5x18	30	CSP 13 M.Gun	51	47	-8	2932,-	**OE-fit**	B,C,D
			7,5x18	46	Image Stella	48	47	-2	2276,-	**OE-fit**	B,D
			7,5x18	47	Image Stella M.Blk	48	47	-2	2276,-	**OE-fit**	B,D
			8x18	7	Nitro Spark G.Blk/Grey	45	47	4	3476,-		B
			8x18	8	Nitro Spark G.Blk/Red	45	47	4	3476,-		B
			8x18	9	Nitro Sabre G.Blk	45	47	4	3496,-		B
			8x18	10	Nitro Demon H.Slv	47	47	0	2972,-		B,C
			8x18	11	Nitro Demon	47	47	0	2784,-		B,C
			8x18	16	Advanti Inizio DST	45	47	4	3828,-		B
			8x18	17	BM Drive M.Gun	45	47	4	2296,-		
			8x18	20	ATS Antares	47	47	0	3056,-		B

Forts. neste side »

Bilmerke - Bilmodell	Årsmodell	Dimensjon	Felgdim.	Bilde	Felgmodell	ET Felg	ET Bil	Avvik ET	Veil. Pris eks. MVA	Merknader	B,C D, M
VOLKSWAGEN (forts.)				PCD: **5-112** Bolt - Mutter: **14x1,50B** CB: **57,1**							
			8x18	21	ATS Antares G.Blk	47	47	0	3136,-		B
			8x18	26	CSP 18 G.Blk/pol	47	47	0	2956,-		
			8x18	27	CSP 18	47	47	0	2972,-		
			8x18	28	CSP 18 G.Blk	47	47	0	2972,-		
			8x18	29	CSP 13	48	47	-2	2932,-	**OE-fit**	B,C,D
			8x18	30	CSP 13 M.Gun	48	47	-2	2932,-	**OE-fit**	B,C,D
			8x18	36	Image Colt	45	47	4	2412,-		B
			8x18	48	Image Motion	44	47	6	2204,-	**OE-fit**	B,C,D
			8x18	49	Image Motion G.Gun	44	47	6	2204,-	**OE-fit**	B,C,D
			8x18	50	Image Legend	45	47	4	2276,-	**OE-fit**	B,D
			8x18	92	Image Colt L.Gun	45	47	4	2296,-		B
			7,5x19	2	Nitro Sapphire FF	48	47	-2	4572,-		B
			8x19	4	Nitro Turismo FF G.Gun/Pol	47	47	0	4644,-		
			8x19	10	Nitro Demon H.Slv	47	47	0	3624,-		B,C
			8x19	11	Nitro Demon	47	47	0	3376,-		B,C
			8x19	16	Advanti Inizio DST	45	47	4	4412,-		B
			8x19	26	CSP 18 G.Blk/pol	47	47	0	3596,-		
			8x19	27	CSP 18	47	47	0	3444,-		
			8x19	28	CSP 18 G.Blk	47	47	0	3444,-		
			8x19	29	CSP 13	48	47	-2	3404,-	**OE-fit**	B,C,D
			8x19	30	CSP 13 M.Gun	48	47	-2	3404,-	**OE-fit**	B,C,D
			8x19	48	Image Motion	44	47	6	2532,-	**OE-fit**	B,C,D
			8x19	49	Image Motion G.Gun	44	47	6	2532,-	**OE-fit**	B,C,D
			8,5x19	3	Nitro Turismo FF	43	47	8	4492,-		D
			8,5x19	4	Nitro Turismo FF G.Gun/Pol	43	47	8	4644,-		D
			8,5x19	5	Nitro Volcano G.Gun	45	47	4	4388,-		B
			8,5x19	6	Nitro Volcano	45	47	4	4632,-		B
			8,5x19	9	Nitro Sabre G.Blk	45	47	4	4292,-		B,M
			8,5x19	36	Image Colt	45	47	4	3028,-		B,M
			8,5x19	92	Image Colt L.Gun	45	47	4	2876,-		B,M
			8x20	2	Nitro Sapphire FF	48	47	-2	5096,-		B
			8x20	4	Nitro Turismo FF G.Gun/Pol	47	47	0	4964,-		
			8,5x20	3	Nitro Turismo FF	43	47	8	4812,-		
			8,5x20	4	Nitro Turismo FF G.Gun/Pol	43	47	8	4964,-		
			8,5x20	5	Nitro Volcano G.Gun	45	47	4	4824,-		B
			8,5x20	6	Nitro Volcano	45	47	4	5164,-		B
			8,5x20	7	Nitro Spark G.Blk/Grey	45	47	4	4660,-		B,M
			8,5x20	8	Nitro Spark G.Blk/Red	45	47	4	4660,-		B,M
			8,5x20	9	Nitro Sabre G.Blk	45	47	4	4800,-		B,M
			8,5x20	10	Nitro Demon H.Slv	45	47	4	4104,-		B,C,M
			8,5x20	11	Nitro Demon	45	47	4	3808,-		B,C,M
			8,5x20	36	Image Colt	45	47	4	3432,-		B,M
			8,5x20	92	Image Colt L.Gun	45	47	4	3276,-		B,M
VOLKSWAGEN				PCD: **5-112** Bolt - Mutter: **14x1,50B** CB: **57,1**							
Golf (AUV) alltrack	11.14-	17-20	7x17	17	BM Drive M.Gun	40	45	10	1736,-		D
			7x17	29	CSP 13	40	45	10	2152,-	**OE-fit**	B,C,D
			7x17	30	CSP 13 M.Gun	40	45	10	2152,-	**OE-fit**	B,C,D
			7x17	40	Image Spirit	40	45	10	1476,-	**OE-fit**	B,D
			7x17	46	Image Stella	40	45	10	1812,-	**OE-fit**	B,D
			7x17	47	Image Stella M.Blk	40	45	10	1812,-	**OE-fit**	B,D
			7x17	48	Image Motion	40	45	10	1736,-	**OE-fit**	B,C,D
			7x17	49	Image Motion G.Gun	40	45	10	1736,-	**OE-fit**	B,C,D
			7,5x17	9	Nitro Sabre G.Blk	45	45	0	3052,-		B
			7,5x17	16	Advanti Inizio DST	42	45	6	3324,-		B
			7,5x17	20	ATS Antares	45	45	0	2264,-		B
			7,5x17	21	ATS Antares G.Blk	45	45	0	2380,-		B
			7,5x17	36	Image Colt	45	45	0	1956,-		B
			7,5x17	50	Image Legend	40	45	10	1812,-	**OE-fit**	B,D
			8x18	2	Nitro Sapphire FF	39	45	12	4036,-		B
			8x18	7	Nitro Spark G.Blk/Grey	45	45	0	3476,-		B
			8x18	8	Nitro Spark G.Blk/Red	45	45	0	3476,-		B
			8x18	9	Nitro Sabre G.Blk	45	45	0	3496,-		B
			8x18	10	Nitro Demon H.Slv	40	45	10	2972,-		B,C
			8x18	11	Nitro Demon	40	45	10	2784,-		B,C
			8x18	16	Advanti Inizio DST	45	45	0	3828,-		B
			8x18	17	BM Drive M.Gun	40	45	10	2296,-		D
			8x18	20	ATS Antares	47	45	-4	3056,-		B
			8x18	21	ATS Antares G.Blk	47	45	-4	3136,-		B
			8x18	29	CSP 13	44	45	2	2932,-	**OE-fit**	B,C,D
			8x18	30	CSP 13 M.Gun	44	45	2	2932,-	**OE-fit**	B,C,D
			8x18	36	Image Colt	45	45	0	2412,-		B
			8x18	40	Image Spirit	40	45	10	1912,-	**OE-fit**	B,D
			8x18	46	Image Stella	40	45	10	2276,-	**OE-fit**	B,D
			8x18	47	Image Stella M.Blk	40	45	10	2276,-	**OE-fit**	B,D
			8x18	48	Image Motion	44	45	2	2204,-	**OE-fit**	B,C,D
			8x18	49	Image Motion G.Gun	44	45	2	2204,-	**OE-fit**	B,C,D
			8x18	50	Image Legend	40	45	10	2276,-	**OE-fit**	B,D
			8x18	92	Image Colt L.Gun	45	45	0	2296,-		B
			8x19	2	Nitro Sapphire FF	39	45	12	4684,-		B
			8x19	10	Nitro Demon H.Slv	40	45	10	3624,-		B,C
			8x19	16	Advanti Inizio DST	45	45	0	4412,-		B
			8x19	29	CSP 13	44	45	2	3404,-	**OE-fit**	B,C,D
			8x19	30	CSP 13 M.Gun	44	45	2	3404,-	**OE-fit**	B,C,D
			8x19	48	Image Motion	44	45	2	2532,-	**OE-fit**	B,C,D
			8x19	49	Image Motion G.Gun	44	45	2	2532,-	**OE-fit**	B,C,D
			8,5x19	3	Nitro Turismo FF	35	45	20	4492,-		

Forts. neste side »

Bilmerke - Bilmodell	Årsmodell	Dimensjon	Felgdim.	Bilde	Felgmodell	ET Felg	ET Bil	Avvik ET	Veil. Pris eks. MVA	Merknader	B,C D, M
VOLKSWAGEN (forts.)				PCD: **5-112** Bolt - Mutter: **14x1,50B**		CB: **57,1**					
			8,5x19	4	Nitro Turismo FF G.Gun/Pol	35	45	20	4644,-		
			8,5x19	5	Nitro Volcano G.Gun	40	45	10	4388,-		B
			8,5x19	6	Nitro Volcano	40	45	10	4632,-		B
			8,5x19	36	Image Colt	45	45	0	3028,-		B,M
			8,5x19	92	Image Colt L.Gun	45	45	0	2876,-		B,M
			8,5x20	1	Nitro Throne FF	40	45	10	5060,-		M
			8,5x20	3	Nitro Turismo FF	35	45	20	4812,-		
			8,5x20	4	Nitro Turismo FF G.Gun/Pol	35	45	20	4964,-		
			8,5x20	5	Nitro Volcano G.Gun	45	45	0	4824,-		B,M
			8,5x20	6	Nitro Volcano	45	45	0	5164,-		B,M
			8,5x20	7	Nitro Spark G.Blk/Grey	35	45	20	4660,-		B,M
			8,5x20	10	Nitro Demon H.Slv	38	45	14	4104,-		B,C,M
			8,5x20	11	Nitro Demon	38	45	14	3808,-		B,C,M
			8,5x20	36	Image Colt	45	45	0	3432,-		B,M
			8,5x20	92	Image Colt L.Gun	45	45	0	3276,-		B,M
VOLKSWAGEN				PCD: **5-112** Bolt - Mutter: **14x1,50B**		CB: **57,1**					
Golf (1K) V R32	11.05-09.08	17-20	7x17	20	ATS Antares	49	50	2	2264,-	**OE-fit**	B,C,D
Golf (1K) VI R	12.09-10.12	17-20	7x17	21	ATS Antares G.Blk	49	50	2	2380,-	**OE-fit**	B,C,D
			7x17	40	Image Spirit	46	50	8	1476,-	**OE-fit**	B,D
			7x17	46	Image Stella	46	50	8	1812,-	**OE-fit**	B,D
			7x17	47	Image Stella M.Blk	46	50	8	1812,-	**OE-fit**	B,D
			7,5x17	9	Nitro Sabre G.Blk	45	50	10	3052,-		B
			7,5x17	20	ATS Antares	45	50	10	2264,-		B
			7,5x17	21	ATS Antares G.Blk	45	50	10	2380,-		B
			7,5x17	50	Image Legend	45	50	10	1812,-	**OE-fit**	B,D
			8x17	17	BM Drive M.Gun	45	50	10	1736,-		
			8x17	48	Image Motion	45	50	10	1736,-		B,C
			7,5x18	2	Nitro Sapphire FF	48	50	4	3944,-		B
			7,5x18	46	Image Stella	48	50	4	2276,-	**OE-fit**	B,D
			7,5x18	47	Image Stella M.Blk	48	50	4	2276,-	**OE-fit**	B,D
			8x18	9	Nitro Sabre G.Blk	45	50	10	3496,-		B
			8x18	10	Nitro Demon H.Slv	47	50	6	2972,-		B,C
			8x18	11	Nitro Demon	47	50	6	2784,-		B,C
			8x18	16	Advanti Inizio DST	45	50	10	3828,-		B
			8x18	17	BM Drive M.Gun	45	50	10	2296,-		
			8x18	20	ATS Antares	47	50	6	3056,-		B
			8x18	21	ATS Antares G.Blk	47	50	6	3136,-		B
			8x18	26	CSP 18 G.Blk/pol	47	50	6	2956,-		
			8x18	27	CSP 18	47	50	6	2972,-		
			8x18	28	CSP 18 G.Blk	47	50	6	2972,-		
			8x18	29	CSP 13	48	50	4	2932,-	**OE-fit**	B,C,D
			8x18	30	CSP 13 M.Gun	48	50	4	2932,-	**OE-fit**	B,C,D
			8x18	36	Image Colt	45	50	10	2412,-		B
			8x18	48	Image Motion	44	50	12	2204,-	**OE-fit**	B,C,D
			8x18	49	Image Motion G.Gun	44	50	12	2204,-	**OE-fit**	B,C,D
			8x18	50	Image Legend	45	50	10	2276,-	**OE-fit**	B,D
			8x18	92	Image Colt L.Gun	45	50	10	2296,-		B
			7,5x19	2	Nitro Sapphire FF	48	50	4	4572,-		B
			8x19	10	Nitro Demon H.Slv	47	50	6	3624,-		B,C
			8x19	11	Nitro Demon	47	50	6	3376,-		B,C
			8x19	16	Advanti Inizio DST	45	50	10	4412,-		B
			8x19	26	CSP 18 G.Blk/pol	47	50	6	3596,-		
			8x19	27	CSP 18	47	50	6	3444,-		
			8x19	28	CSP 18 G.Blk	47	50	6	3444,-		
			8x19	29	CSP 13	48	50	4	3404,-	**OE-fit**	B,C,D
			8x19	30	CSP 13 M.Gun	48	50	4	3404,-	**OE-fit**	B,C,D
			8x19	48	Image Motion	44	50	12	2532,-	**OE-fit**	B,C,D
			8x19	49	Image Motion G.Gun	44	50	12	2532,-	**OE-fit**	B,C,D
			8,5x19	3	Nitro Turismo FF	43	50	14	4492,-		D
			8,5x19	4	Nitro Turismo FF G.Gun/Pol	43	50	14	4644,-		D
			8,5x19	5	Nitro Volcano G.Gun	45	50	10	4388,-		B
			8,5x19	6	Nitro Volcano	45	50	10	4632,-		B
			8,5x19	9	Nitro Sabre G.Blk	45	50	10	4292,-		B,M
			8,5x19	36	Image Colt	45	50	10	3028,-		B,M
			8,5x19	92	Image Colt L.Gun	45	50	10	2876,-		B,M
			8x20	2	Nitro Sapphire FF	48	50	4	5096,-		B
			8,5x20	3	Nitro Turismo FF	43	50	14	4812,-		
			8,5x20	4	Nitro Turismo FF G.Gun/Pol	43	50	14	4964,-		
			8,5x20	7	Nitro Spark G.Blk/Grey	45	50	10	4660,-		B,M
			8,5x20	8	Nitro Spark G.Blk/Red	45	50	10	4660,-		B,M
			8,5x20	9	Nitro Sabre G.Blk	45	50	10	4800,-		B,M
			8,5x20	10	Nitro Demon H.Slv	45	50	10	4104,-		B,C,M
			8,5x20	11	Nitro Demon	45	50	10	3808,-		B,C,M
			8,5x20	36	Image Colt	45	50	10	3432,-		B,M
			8,5x20	92	Image Colt L.Gun	45	50	10	3276,-		B,M
VOLKSWAGEN				PCD: **5-112** Bolt - Mutter: **14x1,50B**		CB: **57,1**					
Golf (AU) VII R	11.13-	17-20	7x17	20	ATS Antares	49	48	-2	2264,-	**OE-fit**	B,C,D
			7x17	21	ATS Antares G.Blk	49	48	-2	2380,-	**OE-fit**	B,C,D
			7x17	40	Image Spirit	46	48	4	1476,-	**OE-fit**	B,D
			7x17	46	Image Stella	46	48	4	1812,-	**OE-fit**	B,D
			7x17	47	Image Stella M.Blk	46	48	4	1812,-	**OE-fit**	B,D
			7,5x17	9	Nitro Sabre G.Blk	45	48	6	3052,-		B
			7,5x17	20	ATS Antares	45	48	6	2264,-		B
			7,5x17	21	ATS Antares G.Blk	45	48	6	2380,-		B
			7,5x17	50	Image Legend	45	48	6	1812,-	**OE-fit**	B,D
			8x17	17	BM Drive M.Gun	45	48	6	1736,-		

Forts. neste side »

Bilmerke - Bilmodell	Årsmodell	Dimensjon	Felgdim.	Bilde	Felgmodell	ET Felg	ET Bil	Avvik ET	Veil. Pris eks. MVA	Merknader	B,C D, M
VOLKSWAGEN (forts.)				PCD: **5-112** Bolt - Mutter: **14x1,50B** CB: **57,1**							
			8x17	48	Image Motion	45	48	6	1736,-		B,C
			7,5x18	2	Nitro Sapphire FF	48	48	0	3944,-		B
			7,5x18	46	Image Stella	48	48	0	2276,-	**OE-fit**	B,D
			7,5x18	47	Image Stella M.Blk	48	48	0	2276,-	**OE-fit**	B,D
			8x18	9	Nitro Sabre G.Blk	45	48	6	3496,-		B
			8x18	10	Nitro Demon H.Slv	47	48	2	2972,-		B,C
			8x18	11	Nitro Demon	47	48	2	2784,-		B,C
			8x18	16	Advanti Inizio DST	45	48	6	3828,-		B
			8x18	17	BM Drive M.Gun	45	48	6	2296,-		
			8x18	20	ATS Antares	47	48	2	3056,-		B
			8x18	21	ATS Antares G.Blk	47	48	2	3136,-		B
			8x18	26	CSP 18 G.Blk/pol	47	48	2	2956,-		
			8x18	27	CSP 18	47	48	2	2972,-		
			8x18	28	CSP 18 G.Blk	47	48	2	2972,-		
			8x18	29	CSP 13	48	48	0	2932,-	**OE-fit**	B,C,D
			8x18	30	CSP 13 M.Gun	48	48	0	2932,-	**OE-fit**	B,C,D
			8x18	36	Image Colt	45	48	6	2412,-		B
			8x18	48	Image Motion	44	48	8	2204,-	**OE-fit**	B,C,D
			8x18	49	Image Motion G.Gun	44	48	8	2204,-	**OE-fit**	B,C,D
			8x18	50	Image Legend	45	48	6	2276,-	**OE-fit**	B,D
			8x18	92	Image Colt L.Gun	45	48	6	2296,-		B
			7,5x19	2	Nitro Sapphire FF	48	48	0	4572,-		B
			8x19	10	Nitro Demon H.Slv	47	48	2	3624,-		B,C
			8x19	11	Nitro Demon	47	48	2	3376,-		B,C
			8x19	16	Advanti Inizio DST	45	48	6	4412,-		B
			8x19	26	CSP 18 G.Blk/pol	47	48	2	3596,-		
			8x19	27	CSP 18	47	48	2	3444,-		
			8x19	28	CSP 18 G.Blk	47	48	2	3444,-		
			8x19	29	CSP 13	48	48	0	3404,-	**OE-fit**	B,C,D
			8x19	30	CSP 13 M.Gun	48	48	0	3404,-	**OE-fit**	B,C,D
			8x19	48	Image Motion	44	48	8	2532,-	**OE-fit**	B,C,D
			8x19	49	Image Motion G.Gun	44	48	8	2532,-	**OE-fit**	B,C,D
			8,5x19	3	Nitro Turismo FF	43	48	10	4492,-		D
			8,5x19	4	Nitro Turismo FF G.Gun/Pol	43	48	10	4644,-		D
			8,5x19	5	Nitro Volcano G.Gun	45	48	6	4388,-		B
			8,5x19	6	Nitro Volcano	45	48	6	4632,-		B
			8,5x19	9	Nitro Sabre G.Blk	45	48	6	4292,-		B,M
			8,5x19	36	Image Colt	45	48	6	3028,-		B,M
			8,5x19	92	Image Colt L.Gun	45	48	6	2876,-		B,M
			8x20	2	Nitro Sapphire FF	48	48	0	5096,-		B
			8,5x20	3	Nitro Turismo FF	43	48	10	4812,-		
			8,5x20	4	Nitro Turismo FF G.Gun/Pol	43	48	10	4964,-		
			8,5x20	7	Nitro Spark G.Blk/Grey	45	48	6	4660,-		B,M
			8,5x20	8	Nitro Spark G.Blk/Red	45	48	6	4660,-		B,M
			8,5x20	9	Nitro Sabre G.Blk	45	48	6	4800,-		B,M
			8,5x20	10	Nitro Demon H.Slv	45	48	6	4104,-		B,C,M
			8,5x20	11	Nitro Demon	45	48	6	3808,-		B,C,M
			8,5x20	36	Image Colt	45	48	6	3432,-		B,M
			8,5x20	92	Image Colt L.Gun	45	48	6	3276,-		B,M
VOLKSWAGEN				PCD: **5-100** Bolt - Mutter: **14x1,50B** CB: **57,1**							
Beetle	10.98-09.11	15-20	5,5x14	45	Image Ride	38	38	0	1392,-	**OE-fit**	B,D
3.2 RSI 17"			6x15	17	BM Drive M.Gun	38	38	0	1276,-		D
Bora	10.98-07.05	14-20	6x15	29	CSP 13	38	38	0	1468,-	**OE-fit**	B,C,D
1.8i, 1.9TDi (74, 81, 85kW) 15"			6x15	30	CSP 13 M.Gun	38	38	0	1468,-	**OE-fit**	B,C,D
2.0i, 2.3 V5 15"			6x15	45	Image Ride	38	38	0	1552,-	**OE-fit**	B,D
Corrado VR6	09.91-12.96	15-19	6x15	48	Image Motion	38	38	0	1224,-	**OE-fit**	B,D
Golf (1J) IV	10.97-09.03	14-20	6x15	49	Image Motion G.Gun	38	38	0	1224,-	**OE-fit**	B,D
1.8i, 1.8T, 1.9TDi 15"			6,5x16	29	CSP 13	35	38	6	1716,-	**OE-fit**	B,C,D
2.0i, 2.3 V5 15"			6,5x16	30	CSP 13 M.Gun	35	38	6	1716,-	**OE-fit**	B,C,D
Golf (1J) IV variant	07.99-05.07	15-20	6,5x16	36	Image Colt	40	38	-4	1624,-		
Golf III GTI	11.91-09.97	15-19	6,5x16	48	Image Motion	38	38	0	1468,-		D
Golf III VR6	11.91-09.97	15-19	6,5x16	49	Image Motion G.Gun	38	38	0	1468,-		D
Passat	09.93-09.96	15-19	6,5x16	92	Image Colt L.Gun	40	38	-4	1548,-		
1.9TDi (81kW), 2.0i-16V			7x17	29	CSP 13	35	38	6	2152,-	**OE-fit**	B,C,D
2.8i/2.9i VR6			7x17	30	CSP 13 M.Gun	35	38	6	2152,-	**OE-fit**	B,C,D
Vento VR6	01.95-09.98	15-19									
VOLKSWAGEN				PCD: **5-100** Bolt - Mutter: **14x1,50B** CB: **57,1**							
Golf (1J) IV R32	09.02-04.04	17-19	7x17	29	CSP 13	35	38	6	2152,-	**OE-fit**	B,C,D
			7x17	30	CSP 13 M.Gun	35	38	6	2152,-	**OE-fit**	B,C,D
VOLKSWAGEN				PCD: **5-112** Bolt - Mutter: **14x1,50B** CB: **57,1**							
CC (3CC)	01.12-11.16	17-20	6,5x16	20	ATS Antares	41	42	2	1852,-	**OE-fit**	B,D
Passat (3C) alltrack	01.12-08.15	17-20	6,5x16	21	ATS Antares G.Blk	41	42	2	1896,-	**OE-fit**	B,D
Scirocco (13)	08.08-	16-20	6,5x16	29	CSP 13	41	42	2	1716,-	**OE-fit**	B,C,D
Scirocco (13) R	01.10-	17-20	6,5x16	30	CSP 13 M.Gun	41	42	2	1716,-	**OE-fit**	B,C,D
			6,5x16	36	Image Colt	35	42	14	1624,-		B
			6,5x16	40	Image Spirit	41	42	2	1264,-	**OE-fit**	B,D
			6,5x16	46	Image Stella	41	42	2	1548,-	**OE-fit**	B,D
			6,5x16	47	Image Stella M.Blk	41	42	2	1548,-	**OE-fit**	B,D
			6,5x16	48	Image Motion	41	42	2	1468,-	**OE-fit**	B,C,D
			6,5x16	50	Image Legend	41	42	2	1544,-	**OE-fit**	B,D
			6,5x16	92	Image Colt L.Gun	35	42	14	1548,-		B
			7x16	17	BM Drive M.Gun	38	42	8	1476,-		D
			7x16	20	ATS Antares	35	42	14	1852,-		B
			7x16	21	ATS Antares G.Blk	35	42	14	1896,-		B
			7,5x16	20	ATS Antares	37	42	10	1852,-		B

Forts. neste side »

Bilmerke - Bilmodell	Årsmodell	Dimensjon	Felgdim.	Bilde	Felgmodell	ET Felg	ET Bil	Avvik ET	Veil. Pris eks. MVA	Merknader	B,C D, M
VOLKSWAGEN (forts.)			PCD: **5-112** Bolt - Mutter: **14x1,50B** CB: **57,1**								
			7,5x16	21	ATS Antares G.Blk	37	42	10	1896,-		B
			7x17	17	BM Drive M.Gun	40	42	4	1736,-		D
			7x17	20	ATS Antares	40	42	4	2264,-	**OE-fit**	B,C,D
			7x17	21	ATS Antares G.Blk	40	42	4	2380,-	**OE-fit**	B,C,D
			7x17	29	CSP 13	40	42	4	2152,-	**OE-fit**	B,C,D
			7x17	30	CSP 13 M.Gun	40	42	4	2152,-	**OE-fit**	B,C,D
			7x17	40	Image Spirit	40	42	4	1476,-	**OE-fit**	B,D
			7x17	46	Image Stella	40	42	4	1812,-	**OE-fit**	B,D
			7x17	47	Image Stella M.Blk	40	42	4	1812,-	**OE-fit**	B,D
			7x17	48	Image Motion	40	42	4	1736,-	**OE-fit**	B,C,D
			7x17	49	Image Motion G.Gun	40	42	4	1736,-	**OE-fit**	B,C,D
			7,5x17	16	Advanti Inizio DST	42	42	0	3324,-		B
			7,5x17	20	ATS Antares	37	42	10	2264,-		B
			7,5x17	21	ATS Antares G.Blk	37	42	10	2380,-		B
			7,5x17	36	Image Colt	35	42	14	1956,-		B
			7,5x17	46	Image Stella	35	42	14	1812,-		B
			7,5x17	47	Image Stella M.Blk	35	42	14	1812,-		B
			7,5x17	50	Image Legend	40	42	4	1812,-	**OE-fit**	B,D
			7,5x17	92	Image Colt L.Gun	35	42	14	1876,-		B
			8x17	9	Nitro Sabre G.Blk	35	42	14	3108,-		B
			8x17	17	BM Drive M.Gun	35	42	14	1736,-		B
			8x17	48	Image Motion	35	42	14	1736,-		B,C
			8x17	49	Image Motion G.Gun	35	42	14	1736,-		B
			8x18	2	Nitro Sapphire FF	39	42	6	4036,-		B
			8x18	7	Nitro Spark G.Blk/Grey	35	42	14	3476,-		B
			8x18	9	Nitro Sabre G.Blk	35	42	14	3496,-		B
			8x18	10	Nitro Demon H.Slv	40	42	4	2972,-		B,C
			8x18	11	Nitro Demon	40	42	4	2784,-		B,C
			8x18	16	Advanti Inizio DST	35	42	14	3828,-		B
			8x18	17	BM Drive M.Gun	40	42	4	2296,-		D
			8x18	20	ATS Antares	39	42	6	3056,-		B
			8x18	21	ATS Antares G.Blk	39	42	6	3136,-		B
			8x18	29	CSP 13	40	42	4	2932,-	**OE-fit**	B,C,D
			8x18	30	CSP 13 M.Gun	40	42	4	2932,-	**OE-fit**	B,C,D
			8x18	36	Image Colt	45	42	-6	2412,-		B
			8x18	40	Image Spirit	40	42	4	1912,-	**OE-fit**	B,D
			8x18	46	Image Stella	40	42	4	2276,-	**OE-fit**	B,D
			8x18	47	Image Stella M.Blk	40	42	4	2276,-	**OE-fit**	B,D
			8x18	48	Image Motion	35	42	14	2204,-		B,C
			8x18	49	Image Motion G.Gun	35	42	14	2204,-		B,C
			8x18	50	Image Legend	40	42	4	2276,-	**OE-fit**	B,D
			8x18	92	Image Colt L.Gun	45	42	-6	2296,-		B
			8x19	2	Nitro Sapphire FF	39	42	6	4684,-		B
			8x19	10	Nitro Demon H.Slv	40	42	4	3624,-		B,C
			8x19	16	Advanti Inizio DST	35	42	14	4412,-		B
			8x19	29	CSP 13	40	42	4	3404,-	**OE-fit**	B,C,D
			8x19	30	CSP 13 M.Gun	40	42	4	3404,-	**OE-fit**	B,C,D
			8x19	48	Image Motion	35	42	14	2532,-		B,C
			8x19	49	Image Motion G.Gun	35	42	14	2532,-		B,C
			8,5x19	3	Nitro Turismo FF	43	42	-2	4492,-		D
			8,5x19	4	Nitro Turismo FF G.Gun/Pol	43	42	-2	4644,-		D
			8,5x19	5	Nitro Volcano G.Gun	40	42	4	4388,-		B
			8,5x19	6	Nitro Volcano	40	42	4	4632,-		B
			8,5x19	9	Nitro Sabre G.Blk	45	42	-6	4292,-		B,M
			8,5x19	36	Image Colt	45	42	-6	3028,-		B,M
			8,5x19	92	Image Colt L.Gun	45	42	-6	2876,-		B,M
			8,5x20	1	Nitro Throne FF	40	42	4	5060,-		M
			8,5x20	3	Nitro Turismo FF	43	42	-2	4812,-		
			8,5x20	4	Nitro Turismo FF G.Gun/Pol	43	42	-2	4964,-		
			8,5x20	5	Nitro Volcano G.Gun	45	42	-6	4824,-		B,M
			8,5x20	6	Nitro Volcano	45	42	-6	5164,-		B,M
			8,5x20	7	Nitro Spark G.Blk/Grey	35	42	14	4660,-		B,M
			8,5x20	9	Nitro Sabre G.Blk	45	42	-6	4800,-		B,M
			8,5x20	10	Nitro Demon H.Slv	45	42	-6	4104,-		B,C,M
			8,5x20	11	Nitro Demon	45	42	-6	3808,-		B,C,M
			8,5x20	36	Image Colt	45	42	-6	3432,-		B,M
			8,5x20	92	Image Colt L.Gun	45	42	-6	3276,-		B,M
			9x20	5	Nitro Volcano G.Gun	40	42	4	4824,-		B,M
			9x20	6	Nitro Volcano	40	42	4	5164,-		B,M
			9x20	10	Nitro Demon H.Slv	40	42	4	4104,-		B,C,M
			9x20	11	Nitro Demon	40	42	4	3808,-		B,M
			9x20	12	Nitro Edge M.Blk	40	42	4	4220,-		M
			9x20	15	Nitro Magnum	40	42	4	4572,-		M
VOLKSWAGEN			PCD: **5-112** Bolt - Mutter: **14x1,50B** CB: **57,1**								
Beetle (16)	10.11-07.19	16-20	6,5x16	20	ATS Antares	41	47	12	1852,-	**OE-fit**	B,D
Beetle (16) cab	03.13-07.19	16-20	6,5x16	21	ATS Antares G.Blk	41	47	12	1896,-	**OE-fit**	B,D
EOS (1F)	06.06-06.15	16-20	6,5x16	29	CSP 13	41	47	12	1716,-	**OE-fit**	B,C,D
3.6 17"			6,5x16	30	CSP 13 M.Gun	41	47	12	1716,-	**OE-fit**	B,C,D
Passat (3C)	03.05-09.10	16-20	6,5x16	36	Image Colt	35	47	24	1624,-		B
V6 4Motion 17"			6,5x16	40	Image Spirit	41	47	12	1264,-	**OE-fit**	B,D
R36 17"			6,5x16	46	Image Stella	41	47	12	1548,-	**OE-fit**	B,D
Passat (3C) sedan	10.10-10.14	16-20	6,5x16	47	Image Stella M.Blk	41	47	12	1548,-	**OE-fit**	B,D
3.6 V6 17"			6,5x16	48	Image Motion	41	47	12	1468,-	**OE-fit**	B,C,D
Passat (3C) variant	03.05-09.10	16-20	6,5x16	50	Image Legend	41	47	12	1544,-	**OE-fit**	B,D
V6 4Motion 17"			6,5x16	92	Image Colt L.Gun	35	47	24	1548,-		B
R36 17"			7x16	17	BM Drive M.Gun	38	47	18	1476,-		D

Forts. neste side »

Bilmerke - Bilmodell	Årsmodell	Dimensjon	Felgdim.	Bilde	Felgmodell	ET Felg	ET Bil	Avvik ET	Veil. Pris eks. MVA	Merknader	B,C D, M
VOLKSWAGEN (forts.)				PCD: **5-112** Bolt - Mutter: **14x1,50B** CB: **57,1**							
Passat (3C) variant	10.10-10.14	16-20	7x17	17	BM Drive M.Gun	40	47	14	1736,-		D
3.6 V6 17"			7x17	20	ATS Antares	40	47	14	2264,-	**OE-fit**	B,C,D
Passat (3CC) CC	05.08-12.11	17-20	7x17	21	ATS Antares G.Blk	40	47	14	2380,-	**OE-fit**	B,C,D
3.6 V6 17"			7x17	29	CSP 13	40	47	14	2152,-	**OE-fit**	B,C,D
			7x17	30	CSP 13 M.Gun	40	47	14	2152,-	**OE-fit**	B,C,D
			7x17	40	Image Spirit	40	47	14	1476,-	**OE-fit**	B,D
			7x17	46	Image Stella	40	47	14	1812,-	**OE-fit**	B,D
			7x17	47	Image Stella M.Blk	40	47	14	1812,-	**OE-fit**	B,D
			7x17	48	Image Motion	40	47	14	1736,-	**OE-fit**	B,C,D
			7x17	49	Image Motion G.Gun	40	47	14	1736,-	**OE-fit**	B,C,D
			7,5x17	9	Nitro Sabre G.Blk	45	47	4	3052,-		B
			7,5x17	16	Advanti Inizio DST	42	47	10	3324,-		B
			7,5x17	20	ATS Antares	45	47	4	2264,-		B
			7,5x17	21	ATS Antares G.Blk	45	47	4	2380,-		B
			7,5x17	36	Image Colt	45	47	4	1956,-		B
			7,5x17	46	Image Stella	35	47	24	1812,-		B
			7,5x17	47	Image Stella M.Blk	35	47	24	1812,-		B
			7,5x17	50	Image Legend	40	47	14	1812,-	**OE-fit**	B,D
			7,5x17	92	Image Colt L.Gun	45	47	4	1876,-		B
			8x17	17	BM Drive M.Gun	45	47	4	1736,-		
			8x17	48	Image Motion	45	47	4	1736,-		B,C
			8x18	7	Nitro Spark G.Blk/Grey	45	47	4	3476,-		B
			8x18	8	Nitro Spark G.Blk/Red	45	47	4	3476,-		B
			8x18	9	Nitro Sabre G.Blk	45	47	4	3496,-		B
			8x18	10	Nitro Demon H.Slv	40	47	14	2972,-		B,C
			8x18	11	Nitro Demon	40	47	14	2784,-		B,C
			8x18	16	Advanti Inizio DST	45	47	4	3828,-		B
			8x18	17	BM Drive M.Gun	40	47	14	2296,-		D
			8x18	20	ATS Antares	47	47	0	3056,-		B
			8x18	21	ATS Antares G.Blk	47	47	0	3136,-		B
			8x18	29	CSP 13	44	47	6	2932,-	**OE-fit**	B,C,D
			8x18	30	CSP 13 M.Gun	44	47	6	2932,-	**OE-fit**	B,C,D
			8x18	36	Image Colt	45	47	4	2412,-		B
			8x18	40	Image Spirit	40	47	14	1912,-	**OE-fit**	B,D
			8x18	46	Image Stella	40	47	14	2276,-	**OE-fit**	B,D
			8x18	47	Image Stella M.Blk	40	47	14	2276,-	**OE-fit**	B,D
			8x18	48	Image Motion	44	47	6	2204,-	**OE-fit**	B,C,D
			8x18	49	Image Motion G.Gun	44	47	6	2204,-	**OE-fit**	B,C,D
			8x18	50	Image Legend	40	47	14	2276,-	**OE-fit**	B,D
			8x18	92	Image Colt L.Gun	45	47	4	2296,-		B
			8x19	10	Nitro Demon H.Slv	40	47	14	3624,-		B,C
			8x19	16	Advanti Inizio DST	45	47	4	4412,-		B
			8x19	29	CSP 13	44	47	6	3404,-	**OE-fit**	B,C,D
			8x19	30	CSP 13 M.Gun	44	47	6	3404,-	**OE-fit**	B,C,D
			8x19	48	Image Motion	44	47	6	2532,-	**OE-fit**	B,C,D
			8x19	49	Image Motion G.Gun	44	47	6	2532,-	**OE-fit**	B,C,D
			8,5x19	3	Nitro Turismo FF	43	47	8	4492,-		D
			8,5x19	4	Nitro Turismo FF G.Gun/Pol	43	47	8	4644,-		D
			8,5x19	5	Nitro Volcano G.Gun	45	47	4	4388,-		B
			8,5x19	6	Nitro Volcano	45	47	4	4632,-		B
			8,5x19	9	Nitro Sabre G.Blk	45	47	4	4292,-		B,M
			8,5x19	36	Image Colt	45	47	4	3028,-		B,M
			8,5x19	92	Image Colt L.Gun	45	47	4	2876,-		B,M
			8,5x20	1	Nitro Throne FF	40	47	14	5060,-		M
			8,5x20	3	Nitro Turismo FF	43	47	8	4812,-		
			8,5x20	4	Nitro Turismo FF G.Gun/Pol	43	47	8	4964,-		
			8,5x20	5	Nitro Volcano G.Gun	45	47	4	4824,-		B,M
			8,5x20	6	Nitro Volcano	45	47	4	5164,-		B,M
			8,5x20	7	Nitro Spark G.Blk/Grey	45	47	4	4660,-		B,M
			8,5x20	8	Nitro Spark G.Blk/Red	45	47	4	4660,-		B,M
			8,5x20	9	Nitro Sabre G.Blk	45	47	4	4800,-		B,M
			8,5x20	10	Nitro Demon H.Slv	45	47	4	4104,-		B,C,M
			8,5x20	11	Nitro Demon	45	47	4	3808,-		B,C,M
			8,5x20	36	Image Colt	45	47	4	3432,-		B,M
			8,5x20	92	Image Colt L.Gun	45	47	4	3276,-		B,M
			9x21	5	Nitro Volcano G.Gun	45	47	4	5540,-		B,M
			9x21	6	Nitro Volcano	45	47	4	5996,-		B,C,M
VOLKSWAGEN				PCD: **5-112** Bolt - Mutter: **14x1,50B** CB: **57,1**							
Arteon (3H)	06.17-	17-21	6,5x16	20	ATS Antares	41	41	0	1852,-	**OE-fit**	B,D
Passat (3C) alltrack	09.15-	17-21	6,5x16	21	ATS Antares G.Blk	41	41	0	1896,-	**OE-fit**	B,D
Passat (3C) sedan	10.14-	16-21	6,5x16	29	CSP 13	41	41	0	1716,-	**OE-fit**	B,C,D
GTE Hybrid, 2.0TDI (176kW) 17"			6,5x16	30	CSP 13 M.Gun	41	41	0	1716,-	**OE-fit**	B,C,D
2.0TSI (206kW) 17"			6,5x16	36	Image Colt	35	41	12	1624,-		B
Passat (3C) variant	10.14-	16-21	6,5x16	40	Image Spirit	41	41	0	1264,-	**OE-fit**	B,D
GTE Hybrid, 2.0TDI (176kW) 17"			6,5x16	46	Image Stella	41	41	0	1548,-	**OE-fit**	B,D
2.0TSI (206kW) 17"			6,5x16	47	Image Stella M.Blk	41	41	0	1548,-	**OE-fit**	B,D
			6,5x16	48	Image Motion	41	41	0	1468,-	**OE-fit**	B,C,D
			6,5x16	50	Image Legend	41	41	0	1544,-	**OE-fit**	B,D
			6,5x16	92	Image Colt L.Gun	35	41	12	1548,-		B
			7x16	17	BM Drive M.Gun	38	41	6	1476,-		D
			7x17	17	BM Drive M.Gun	40	41	2	1736,-		D
			7x17	20	ATS Antares	40	41	2	2264,-	**OE-fit**	B,C,D
			7x17	21	ATS Antares G.Blk	40	41	2	2380,-	**OE-fit**	B,C,D
			7x17	29	CSP 13	40	41	2	2152,-	**OE-fit**	B,C,D
			7x17	30	CSP 13 M.Gun	40	41	2	2152,-	**OE-fit**	B,C,D
			7x17	40	Image Spirit	40	41	2	1476,-	**OE-fit**	B,D

Forts. neste side »

Bilmerke - Bilmodell	Årsmodell	Dimensjon	Felgdim.	Bilde	Felgmodell	ET Felg	ET Bil	Avvik ET	Veil. Pris eks. MVA	Merknader	B,C D, M
VOLKSWAGEN (forts.)			PCD: **5-112** Bolt - Mutter: **14x1,50B**		CB: **57,1**						
			7x17	46	Image Stella	40	41	2	1812,-	**OE-fit**	B,D
			7x17	47	Image Stella M.Blk	40	41	2	1812,-	**OE-fit**	B,D
			7x17	48	Image Motion	40	41	2	1736,-	**OE-fit**	B,C,D
			7x17	49	Image Motion G.Gun	40	41	2	1736,-	**OE-fit**	B,C,D
			7,5x17	16	Advanti Inizio DST	42	41	-2	3324,-		B
			7,5x17	20	ATS Antares	37	41	8	2264,-		B
			7,5x17	21	ATS Antares G.Blk	37	41	8	2380,-		B
			7,5x17	36	Image Colt	35	41	12	1956,-		B
			7,5x17	46	Image Stella	35	41	12	1812,-		B
			7,5x17	47	Image Stella M.Blk	35	41	12	1812,-		B
			7,5x17	50	Image Legend	40	41	2	1812,-	**OE-fit**	B,D
			7,5x17	92	Image Colt L.Gun	35	41	12	1876,-		B
			8x17	9	Nitro Sabre G.Blk	35	41	12	3108,-		B
			8x17	17	BM Drive M.Gun	35	41	12	1736,-		B
			8x17	48	Image Motion	35	41	12	1736,-		B,C
			8x17	49	Image Motion G.Gun	35	41	12	1736,-		B
			8x18	2	Nitro Sapphire FF	39	41	4	4036,-		B
			8x18	7	Nitro Spark G.Blk/Grey	35	41	12	3476,-		B
			8x18	9	Nitro Sabre G.Blk	35	41	12	3496,-		B
			8x18	10	Nitro Demon H.Slv	40	41	2	2972,-		B,C
			8x18	11	Nitro Demon	40	41	2	2784,-		B,C
			8x18	16	Advanti Inizio DST	35	41	12	3828,-		B
			8x18	17	BM Drive M.Gun	40	41	2	2296,-		D
			8x18	20	ATS Antares	39	41	4	3056,-		B
			8x18	21	ATS Antares G.Blk	39	41	4	3136,-		B
			8x18	29	CSP 13	40	41	2	2932,-	**OE-fit**	B,C,D
			8x18	30	CSP 13 M.Gun	40	41	2	2932,-	**OE-fit**	B,C,D
			8x18	36	Image Colt	35	41	12	2412,-		B
			8x18	40	Image Spirit	40	41	2	1912,-	**OE-fit**	B,D
			8x18	46	Image Stella	40	41	2	2276,-	**OE-fit**	B,D
			8x18	47	Image Stella M.Blk	40	41	2	2276,-	**OE-fit**	B,D
			8x18	48	Image Motion	44	41	-6	2204,-	**OE-fit**	B,C,D
			8x18	49	Image Motion G.Gun	44	41	-6	2204,-	**OE-fit**	B,C,D
			8x18	50	Image Legend	40	41	2	2276,-	**OE-fit**	B,D
			8x18	92	Image Colt L.Gun	35	41	12	2296,-		B
			8x19	2	Nitro Sapphire FF	39	41	4	4684,-		B
			8x19	10	Nitro Demon H.Slv	40	41	2	3624,-		B,C
			8x19	16	Advanti Inizio DST	35	41	12	4412,-		B
			8x19	29	CSP 13	40	41	2	3404,-	**OE-fit**	B,C,D
			8x19	30	CSP 13 M.Gun	40	41	2	3404,-	**OE-fit**	B,C,D
			8x19	48	Image Motion	44	41	-6	2532,-	**OE-fit**	B,C,D
			8x19	49	Image Motion G.Gun	44	41	-6	2532,-	**OE-fit**	B,C,D
			8,5x19	2	Nitro Sapphire FF	40	41	2	4684,-		B
			8,5x19	3	Nitro Turismo FF	43	41	-4	4492,-		D
			8,5x19	4	Nitro Turismo FF G.Gun/Pol	43	41	-4	4644,-		D
			8,5x19	5	Nitro Volcano G.Gun	40	41	2	4388,-		B
			8,5x19	6	Nitro Volcano	40	41	2	4632,-		B
			8,5x19	9	Nitro Sabre G.Blk	45	41	-8	4292,-		B
			8,5x19	36	Image Colt	35	41	12	3028,-		B
			8,5x19	92	Image Colt L.Gun	35	41	12	2876,-		B
			8,5x20	1	Nitro Throne FF	40	41	2	5060,-		M
			8,5x20	2	Nitro Sapphire FF	40	41	2	5216,-		B
			8,5x20	3	Nitro Turismo FF	43	41	-4	4812,-		
			8,5x20	4	Nitro Turismo FF G.Gun/Pol	43	41	-4	4964,-		
			8,5x20	5	Nitro Volcano G.Gun	45	41	-8	4824,-		B
			8,5x20	6	Nitro Volcano	45	41	-8	5164,-		B
			8,5x20	7	Nitro Spark G.Blk/Grey	35	41	12	4660,-		B,M
			8,5x20	9	Nitro Sabre G.Blk	45	41	-8	4800,-		B
			8,5x20	10	Nitro Demon H.Slv	45	41	-8	4104,-		B,C
			8,5x20	11	Nitro Demon	45	41	-8	3808,-		B,C
			8,5x20	36	Image Colt	35	41	12	3432,-		B
			8,5x20	92	Image Colt L.Gun	35	41	12	3276,-		B
			9x20	5	Nitro Volcano G.Gun	40	41	2	4824,-		B,M
			9x20	6	Nitro Volcano	40	41	2	5164,-		B,M
			9x20	10	Nitro Demon H.Slv	40	41	2	4104,-		B,C,M
			9x20	11	Nitro Demon	40	41	2	3808,-		B,M
			9x20	15	Nitro Magnum	40	41	2	4572,-		M
			9x21	5	Nitro Volcano G.Gun	40	41	2	5540,-		B,M
			9x21	6	Nitro Volcano	40	41	2	5996,-		B,M
VOLKSWAGEN			PCD: **5-112** Bolt - Mutter: **14x1,50B**		CB: **57,1**						
Passat	10.96-10.00	15-20	6x15	17	BM Drive M.Gun	43	37	-12	1276,-		D
Passat	11.00-02.05	15-20	6x15	29	CSP 13	43	37	-12	1468,-	**OE-fit**	B,C,D
2.3 V5, V6 16"			6x15	30	CSP 13 M.Gun	43	37	-12	1468,-	**OE-fit**	B,C,D
Passat W8	06.01-10.05	17-20	6x15	48	Image Motion	43	37	-12	1224,-	**OE-fit**	B,C,D
Passat variant	10.96-10.00	15-20	6x15	49	Image Motion G.Gun	43	37	-12	1224,-	**OE-fit**	B,C,D
			6,5x16	29	CSP 13	41	37	-8	1716,-	**OE-fit**	B,C,D
			6,5x16	30	CSP 13 M.Gun	41	37	-8	1716,-	**OE-fit**	B,C,D
			6,5x16	36	Image Colt	35	37	4	1624,-		B
			6,5x16	40	Image Spirit	41	37	-8	1264,-	**OE-fit**	B,D
			6,5x16	46	Image Stella	41	37	-8	1548,-	**OE-fit**	B,D
			6,5x16	47	Image Stella M.Blk	41	37	-8	1548,-	**OE-fit**	B,D
			6,5x16	48	Image Motion	41	37	-8	1468,-	**OE-fit**	B,C,D
			6,5x16	50	Image Legend	41	37	-8	1544,-	**OE-fit**	B,D
			6,5x16	92	Image Colt L.Gun	35	37	4	1548,-		B
			7x16	17	BM Drive M.Gun	38	37	-2	1476,-		D
			7x16	50	Image Legend	45	37	-16	1544,-		B

Forts. neste side »

Bilmerke - Bilmodell	Årsmodell	Dimensjon	Felgdim.	Bilde	Felgmodell	ET Felg	ET Bil	Avvik ET	Veil. Pris eks. MVA	Merknader	B,C D, M
VOLKSWAGEN (forts.)				PCD: **5-112** Bolt - Mutter: **14x1,50B** CB: **57,1**							
			7x17	17	BM Drive M.Gun	40	37	-6	1736,-		D
			7x17	29	CSP 13	40	37	-6	2152,-	**OE-fit**	B,C,D
			7x17	30	CSP 13 M.Gun	40	37	-6	2152,-	**OE-fit**	B,C,D
			7x17	40	Image Spirit	40	37	-6	1476,-	**OE-fit**	B,D
			7x17	46	Image Stella	40	37	-6	1812,-	**OE-fit**	B,D
			7x17	47	Image Stella M.Blk	40	37	-6	1812,-	**OE-fit**	B,D
			7x17	48	Image Motion	40	37	-6	1736,-	**OE-fit**	B,C,D
			7x17	49	Image Motion G.Gun	40	37	-6	1736,-	**OE-fit**	B,C,D
			7,5x17	50	Image Legend	40	37	-6	1812,-	**OE-fit**	B,D
			8x17	9	Nitro Sabre G.Blk	35	37	4	3108,-		B
			8x18	7	Nitro Spark G.Blk/Grey	35	37	4	3476,-		B
			8x18	9	Nitro Sabre G.Blk	35	37	4	3496,-		B
			8x18	10	Nitro Demon H.Slv	40	37	-6	2972,-		B,C
			8x18	11	Nitro Demon	40	37	-6	2784,-		B,C
			8x18	16	Advanti Inizio DST	35	37	4	3828,-		B
			8x18	17	BM Drive M.Gun	40	37	-6	2296,-		D
			8x18	29	CSP 13	40	37	-6	2932,-	**OE-fit**	B,C,D
			8x18	30	CSP 13 M.Gun	40	37	-6	2932,-	**OE-fit**	B,C,D
			8x18	40	Image Spirit	40	37	-6	1912,-	**OE-fit**	B,D
			8x19	10	Nitro Demon H.Slv	40	37	-6	3624,-		B,C
			8x19	16	Advanti Inizio DST	35	37	4	4412,-		B
			8x19	29	CSP 13	40	37	-6	3404,-	**OE-fit**	B,C,D
			8x19	30	CSP 13 M.Gun	40	37	-6	3404,-	**OE-fit**	B,C,D
			8,5x19	3	Nitro Turismo FF	35	37	4	4492,-		M
			8,5x19	4	Nitro Turismo FF G.Gun/Pol	35	37	4	4644,-		M
			8,5x19	9	Nitro Sabre G.Blk	35	37	4	4292,-		B,M
			8,5x20	3	Nitro Turismo FF	35	37	4	4812,-		M
			8,5x20	4	Nitro Turismo FF G.Gun/Pol	35	37	4	4964,-		M
			8,5x20	7	Nitro Spark G.Blk/Grey	35	37	4	4660,-		B,M
			8,5x20	9	Nitro Sabre G.Blk	35	37	4	4800,-		B,M
			8,5x20	10	Nitro Demon H.Slv	45	37	-16	4104,-		B,C,M
			8,5x20	11	Nitro Demon	45	37	-16	3808,-		B,C,M
VOLKSWAGEN				PCD: **5-112** Bolt - Mutter: **14x1,50B** CB: **57,1**							
Pheaton (3D)	09.02-03.16	17-21	7,5x17	20	ATS Antares	37	40	6	2264,-		B
V10TDi 18"			7,5x17	21	ATS Antares G.Blk	37	40	6	2380,-		B
W12 18"			8x18	10	Nitro Demon H.Slv	35	40	10	2972,-		B,C
			8x18	11	Nitro Demon	35	40	10	2784,-		B,C
			8x18	20	ATS Antares	39	40	2	3056,-		B
			8x18	21	ATS Antares G.Blk	39	40	2	3136,-		B
			8,5x18	16	Advanti Inizio DST	35	40	10	3828,-		B
			8x19	10	Nitro Demon H.Slv	35	40	10	3624,-		B,C
			8x19	11	Nitro Demon	35	40	10	3376,-		B,C
			8,5x19	3	Nitro Turismo FF	35	40	10	4492,-		
			8,5x19	4	Nitro Turismo FF G.Gun/Pol	35	40	10	4644,-		
			8,5x19	9	Nitro Sabre G.Blk	35	40	10	4292,-		B
			8,5x19	16	Advanti Inizio DST	35	40	10	4412,-		B
			8,5x20	3	Nitro Turismo FF	35	40	10	4812,-		
			8,5x20	4	Nitro Turismo FF G.Gun/Pol	35	40	10	4964,-		
			8,5x20	9	Nitro Sabre G.Blk	35	40	10	4800,-		B
			8,5x20	10	Nitro Demon H.Slv	38	40	4	4104,-		B,C
			8,5x20	11	Nitro Demon	38	40	4	3808,-		B,C
			9x20	3	Nitro Turismo FF	30	40	20	4960,-		
			9x20	4	Nitro Turismo FF G.Gun/Pol	30	40	20	5048,-		
VOLKSWAGEN				PCD: **5-120** Bolt - Mutter: **14x1,50B** CB: **65,1**							
Touareg (7L) R5 TDi	10.02-04.10	16-22	7x17	54	Image Vector	55	54	-2	2576,-		C,D
			7x17	55	Image Vector Slv	55	54	-2	2576,-		C,D
			8x18	53	Nitro Hammer	48	54	12	3256,-		D
			9x19	11	Nitro Demon	45	54	18	3376,-		
			9x19	12	Nitro Edge M.Blk	45	54	18	3884,-		D
			8,5x20	53	Nitro Hammer	48	54	12	4268,-		D
			9x20	12	Nitro Edge M.Blk	45	54	18	4220,-		D
			9x20	15	Nitro Magnum	40	54	28	4572,-		M
			9,5x20	11	Nitro Demon	45	54	18	3808,-		
			9x22	12	Nitro Edge M.Blk	45	54	18	4888,-		D
			9x22	15	Nitro Magnum	40	54	28	5420,-		M
VOLKSWAGEN				PCD: **5-130** Bolt - Mutter: **14x1,50B** CB: **71,5**							
Touareg (7L)	10.02-04.10	17-22	9x20	3	Nitro Turismo FF	50	53	6	4960,-	**OE-fit**	B,D
V10TDi 18"			9x20	4	Nitro Turismo FF G.Gun/Pol	50	53	6	5048,-	**OE-fit**	B,D
R50, W12 19"			9x20	15	Nitro Magnum	40	53	26	4572,-		D
Touareg (7P)	05.10-03.18	17-22	10x20	12	Nitro Edge M.Blk	48	53	10	4220,-		D
Hybrid, V8 TDI 18"			9x22	15	Nitro Magnum	40	53	26	5420,-		D
			10x22	12	Nitro Edge M.Blk	48	53	10	4888,-		D
			10,5x22	15	Nitro Magnum	48	53	10	5420,-	Kun bak	D,M
VOLKSWAGEN				PCD: **5-112** Bolt - Mutter: **14x1,50B** CB: **66,5**							
Touareg (CR)	04.18-	18-22	8,5x19	96	Image Colt SUV G.Blk/Pol	28	31	6	3492,-	**OE-fit**	B,D
4.0TDI 19"			8,5x19	97	Image Colt SUV L.Gun	28	31	6	3396,-	**OE-fit**	B,D
			9x19	10	Nitro Demon H.Slv	28	31	6	3624,-		C,D
			9x19	11	Nitro Demon	28	31	6	3376,-		C,D
			9x19	12	Nitro Edge M.Blk	25	31	12	3884,-		D
			9x19	91	Nitro Demon Slv	28	31	6	3376,-	**OE-fit**	B,D
			8,5x20	1	Nitro Throne FF	30	31	2	5060,-		D
			9x20	2	Nitro Sapphire FF	30	31	2	5216,-		D
			9x20	3	Nitro Turismo FF	26	31	10	4960,-	**OE-fit**	B,D
			9x20	4	Nitro Turismo FF G.Gun/Pol	26	31	10	5048,-	**OE-fit**	B,D
			9x20	5	Nitro Volcano G.Gun	32	31	-2	4824,-		C,D

Forts. neste side »

Bilmerke - Bilmodell	Årsmodell	Dimensjon	Felgdim.	Bilde	Felgmodell	ET Felg	ET Bil	Avvik ET	Veil. Pris eks. MVA	Merknader	B,C D, M
VOLKSWAGEN (forts.)			PCD: **5-112** Bolt - Mutter: **14x1,50B** CB: **66,5**								
			9x20	6	Nitro Volcano	32	31	-2	5164,-		C,D
			9x20	10	Nitro Demon H.Slv	33	31	-4	4104,-	**OE-fit**	B,C,D
			9x20	11	Nitro Demon	30	31	2	3808,-		C,D
			9x20	12	Nitro Edge M.Blk	25	31	12	4220,-		D
			9x20	15	Nitro Magnum	28	31	6	4572,-		D
			9x20	96	Image Colt SUV G.Blk/Pol	33	31	-4	4124,-	**OE-fit**	B,D
			9x20	97	Image Colt SUV L.Gun	33	31	-4	4008,-	**OE-fit**	B,D
			9,5x20	3	Nitro Turismo FF	30	31	2	4960,-		D
			9,5x20	4	Nitro Turismo FF G.Gun/Pol	30	31	2	5048,-		D
			9,5x20	10	Nitro Demon H.Slv	30	31	2	4104,-		C,D
			9,5x20	11	Nitro Demon	30	31	2	3808,-		C,D
			10x20	1	Nitro Throne FF	30	31	2	5308,-		D
			10x20	12	Nitro Edge M.Blk	30	31	2	4220,-		D
			10,5x20	5	Nitro Volcano G.Gun	30	31	2	4824,-		C,D,M
			10,5x20	6	Nitro Volcano	30	31	2	5164,-		C,D,M
			9x21	5	Nitro Volcano G.Gun	32	31	-2	5540,-		C,D
			9x21	6	Nitro Volcano	32	31	-2	5996,-		C,D
			10x21	24	ATS Mizar	30	31	2	9016,-		D
			10x21	25	ATS Mizar G.Blk	30	31	2	9156,-		D
			10,5x21	5	Nitro Volcano G.Gun	30	31	2	5540,-		C,D,M
			10,5x21	6	Nitro Volcano	30	31	2	5996,-		D,M
			9x22	15	Nitro Magnum	28	31	6	5420,-		C,D,M
			9,5x22	1	Nitro Throne FF	25	31	12	6276,-		D
			10x22	12	Nitro Edge M.Blk	30	31	2	4888,-		D
			10,5x22	1	Nitro Throne FF	30	31	2	6572,-		D,M
			10,5x22	15	Nitro Magnum	30	31	2	5420,-		D,M
VOLKSWAGEN			PCD: **5-112** Bolt - Mutter: **14x1,50B** CB: **57,1**								
Sharan (7M)	09.95-04.01	15-20	6,5x16	46	Image Stella	46	55	18	1548,-		D
Sharan (7M)	05.01-04.10	16-20	6,5x16	47	Image Stella M.Blk	46	55	18	1548,-		D
T4 Caravelle	01.96-04.03	15-20	8x18	7	Nitro Spark G.Blk/Grey	45	55	20	3476,-		
T4 Transporter	01.96-04.03	15-20	8x18	8	Nitro Spark G.Blk/Red	45	55	20	3476,-		
			8x18	53	Nitro Hammer	48	55	14	3256,-		
			8,5x20	7	Nitro Spark G.Blk/Grey	45	55	20	4660,-		
			8,5x20	8	Nitro Spark G.Blk/Red	45	55	20	4660,-		
			8,5x20	53	Nitro Hammer	48	55	14	4268,-		
VOLKSWAGEN			PCD: **5-112** Bolt - Mutter: **14x1,50B** CB: **57,1**								
Sharan (7N)	05.10-	16-20	6,5x16	20	ATS Antares	33	39	12	1852,-	**OE-fit**	B,D
Tiguan (5N)	10.07-02.16	16-21	6,5x16	21	ATS Antares G.Blk	33	39	12	1896,-	**OE-fit**	B,D
			6,5x16	29	CSP 13	33	39	12	1716,-	**OE-fit**	B,C,D
			6,5x16	30	CSP 13 M.Gun	33	39	12	1716,-	**OE-fit**	B,C,D
			6,5x16	36	Image Colt	35	39	8	1624,-		B
			6,5x16	92	Image Colt L.Gun	35	39	8	1548,-		B
			7x16	17	BM Drive M.Gun	38	39	2	1476,-		D
			7x16	20	ATS Antares	35	39	8	1852,-		B
			7x16	21	ATS Antares G.Blk	35	39	8	1896,-		B
			7x16	48	Image Motion	35	39	8	1468,-		B,C
			7x16	50	Image Legend	35	39	8	1544,-		B
			7,5x16	20	ATS Antares	37	39	4	1852,-		
			7,5x16	21	ATS Antares G.Blk	37	39	4	1896,-		
			7x17	17	BM Drive M.Gun	40	39	-2	1736,-		D
			7x17	20	ATS Antares	40	39	-2	2264,-	**OE-fit**	B,C,D
			7x17	21	ATS Antares G.Blk	40	39	-2	2380,-	**OE-fit**	B,C,D
			7x17	29	CSP 13	40	39	-2	2152,-	**OE-fit**	B,C,D
			7x17	30	CSP 13 M.Gun	40	39	-2	2152,-	**OE-fit**	B,C,D
			7x17	40	Image Spirit	40	39	-2	1476,-	**OE-fit**	B,D
			7x17	46	Image Stella	40	39	-2	1812,-	**OE-fit**	B,D
			7x17	47	Image Stella M.Blk	40	39	-2	1812,-	**OE-fit**	B,D
			7x17	48	Image Motion	35	39	8	1736,-	**OE-fit**	B,C,D
			7x17	49	Image Motion G.Gun	40	39	-2	1736,-	**OE-fit**	B,C,D
			7,5x17	20	ATS Antares	37	39	4	2264,-		B
			7,5x17	21	ATS Antares G.Blk	37	39	4	2380,-		B
			7,5x17	36	Image Colt	35	39	8	1956,-		B
			7,5x17	46	Image Stella	35	39	8	1812,-		B
			7,5x17	47	Image Stella M.Blk	35	39	8	1812,-		B
			7,5x17	50	Image Legend	40	39	-2	1812,-	**OE-fit**	B,D
			7,5x17	92	Image Colt L.Gun	35	39	8	1876,-		B
			8x17	9	Nitro Sabre G.Blk	35	39	8	3108,-		B
			8x17	17	BM Drive M.Gun	35	39	8	1736,-		B
			8x17	48	Image Motion	35	39	8	1736,-		B,C
			8x17	49	Image Motion G.Gun	35	39	8	1736,-		B
			7,5x18	29	CSP 13	35	39	8	2932,-	**OE-fit**	B,C,D
			7,5x18	30	CSP 13 M.Gun	35	39	8	2932,-	**OE-fit**	B,C,D
			8x18	2	Nitro Sapphire FF	39	39	0	4036,-		
			8x18	7	Nitro Spark G.Blk/Grey	35	39	8	3476,-		B
			8x18	9	Nitro Sabre G.Blk	35	39	8	3496,-		B
			8x18	10	Nitro Demon H.Slv	40	39	-2	2972,-		B,C
			8x18	11	Nitro Demon	40	39	-2	2784,-		B,C
			8x18	16	Advanti Inizio DST	35	39	8	3828,-		
			8x18	17	BM Drive M.Gun	40	39	-2	2296,-		D
			8x18	20	ATS Antares	40	39	-2	3056,-		B
			8x18	21	ATS Antares G.Blk	40	39	-2	3136,-		B
			8x18	36	Image Colt	35	39	8	2412,-		B
			8x18	40	Image Spirit	35	39	8	1912,-		
			8x18	46	Image Stella	40	39	-2	2276,-	**OE-fit**	B,D
			8x18	47	Image Stella M.Blk	40	39	-2	2276,-	**OE-fit**	B,D
			8x18	48	Image Motion	44	39	-10	2204,-	**OE-fit**	B,C,D

Forts. neste side »

Bilmerke - Bilmodell	Årsmodell	Dimensjon	Felgdim.	Bilde	Felgmodell	ET Felg	ET Bil	Avvik ET	Veil. Pris eks. MVA	Merknader	B,C D, M
VOLKSWAGEN (forts.)				PCD: **5-112** Bolt - Mutter: **14x1,50B** CB: **57,1**							
			8x18	49	Image Motion G.Gun	44	39	-10	2204,-	**OE-fit**	B,C,D
			8x18	50	Image Legend	40	39	-2	2276,-	**OE-fit**	B,D
			8x18	92	Image Colt L.Gun	35	39	8	2296,-		B
			8,5x18	16	Advanti Inizio DST	35	39	8	3828,-		
			8x19	2	Nitro Sapphire FF	39	39	0	4684,-		
			8x19	10	Nitro Demon H.Slv	40	39	-2	3624,-		B,C
			8x19	16	Advanti Inizio DST	35	39	8	4412,-		
			8x19	48	Image Motion	44	39	-10	2532,-	**OE-fit**	B,C,D
			8x19	49	Image Motion G.Gun	44	39	-10	2532,-	**OE-fit**	B,C,D
			8,5x19	2	Nitro Sapphire FF	40	39	-2	4684,-		
			8,5x19	3	Nitro Turismo FF	35	39	8	4492,-		
			8,5x19	4	Nitro Turismo FF G.Gun/Pol	35	39	8	4644,-		
			8,5x19	5	Nitro Volcano G.Gun	32	39	14	4388,-		
			8,5x19	6	Nitro Volcano	32	39	14	4632,-		
			8,5x19	9	Nitro Sabre G.Blk	35	39	8	4292,-		B
			8,5x19	16	Advanti Inizio DST	35	39	8	4412,-		
			8,5x19	36	Image Colt	35	39	8	3028,-		B
			8,5x19	92	Image Colt L.Gun	35	39	8	2876,-		B
			9x19	12	Nitro Edge M.Blk	40	39	-2	3884,-		
			8,5x20	1	Nitro Throne FF	40	39	-2	5060,-		
			8,5x20	2	Nitro Sapphire FF	40	39	-2	5216,-		
			8,5x20	3	Nitro Turismo FF	35	39	8	4812,-		
			8,5x20	4	Nitro Turismo FF G.Gun/Pol	35	39	8	4964,-		
			8,5x20	7	Nitro Spark G.Blk/Grey	35	39	8	4660,-		B
			8,5x20	9	Nitro Sabre G.Blk	35	39	8	4800,-		B
			8,5x20	10	Nitro Demon H.Slv	38	39	2	4104,-		B,C
			8,5x20	11	Nitro Demon	38	39	2	3808,-		B,C
			8,5x20	36	Image Colt	35	39	8	3432,-		
			8,5x20	92	Image Colt L.Gun	35	39	8	3276,-		B
			9x20	5	Nitro Volcano G.Gun	32	39	14	4824,-	Kun Tiguan	B
			9x20	6	Nitro Volcano	32	39	14	5164,-	Kun Tiguan	B
			9x20	10	Nitro Demon H.Slv	40	39	-2	4104,-	Kun Tiguan	B,C
			9x20	11	Nitro Demon	40	39	-2	3808,-	Kun Tiguan	B
			9x20	12	Nitro Edge M.Blk	40	39	-2	4220,-		
			9x20	15	Nitro Magnum	40	39	-2	4572,-	Kun Tiguan	
			9x21	5	Nitro Volcano G.Gun	32	39	14	5540,-	Kun Tiguan	B
			9x21	6	Nitro Volcano	32	39	14	5996,-	Kun Tiguan	B
VOLKSWAGEN				PCD: **5-100** Bolt - Mutter: **14x1,50B** CB: **57,1**							
T-Cross (C1)	03.19-	16-20	6,5x16	29	CSP 13	35	35	0	1716,-	**OE-fit**	B,C,D
			6,5x16	30	CSP 13 M.Gun	35	35	0	1716,-	**OE-fit**	B,C,D
			6,5x16	36	Image Colt	40	35	-10	1624,-		
			6,5x16	46	Image Stella	43	35	-16	1548,-	**OE-fit**	B,D
			6,5x16	47	Image Stella M.Blk	43	35	-16	1548,-	**OE-fit**	B,D
			6,5x16	48	Image Motion	38	35	-6	1468,-	**OE-fit**	B,D
			6,5x16	49	Image Motion G.Gun	38	35	-6	1468,-	**OE-fit**	B,D
			6,5x16	92	Image Colt L.Gun	40	35	-10	1548,-		
			7x17	29	CSP 13	35	35	0	2152,-	**OE-fit**	B,C,D
			7x17	30	CSP 13 M.Gun	35	35	0	2152,-	**OE-fit**	B,C,D
			7,5x17	16	Advanti Inizio DST	42	35	-14	3324,-	**OE-fit**	B,D
			7,5x17	36	Image Colt	43	35	-16	1956,-		
			7,5x17	92	Image Colt L.Gun	43	35	-16	1876,-		
			8x18	16	Advanti Inizio DST	42	35	-14	3828,-	**OE-fit**	B,D,M
			8x19	16	Advanti Inizio DST	42	35	-14	4412,-	**OE-fit**	B,D,M
VOLKSWAGEN				PCD: **5-112** Bolt - Mutter: **14x1,50B** CB: **57,1**							
T-Roc (A1)	12.17-	16-21	6,5x16	20	ATS Antares	41	45	8	1852,-	**OE-fit**	B,C,D
T-Roc (A1) R	12.19-	18-21	6,5x16	21	ATS Antares G.Blk	41	45	8	1896,-	**OE-fit**	B,C,D
			6,5x16	29	CSP 13	41	45	8	1716,-	**OE-fit**	B,C,D
			6,5x16	30	CSP 13 M.Gun	41	45	8	1716,-	**OE-fit**	B,C,D
			6,5x16	36	Image Colt	45	45	0	1624,-		B
			6,5x16	40	Image Spirit	41	45	8	1264,-	**OE-fit**	B,D
			6,5x16	46	Image Stella	41	45	8	1548,-	**OE-fit**	B,D
			6,5x16	47	Image Stella M.Blk	41	45	8	1548,-	**OE-fit**	B,D
			6,5x16	48	Image Motion	41	45	8	1468,-	**OE-fit**	B,C,D
			6,5x16	50	Image Legend	41	45	8	1544,-	**OE-fit**	B,D
			6,5x16	92	Image Colt L.Gun	45	45	0	1548,-		B
			7x16	17	BM Drive M.Gun	45	45	0	1476,-	**OE-fit**	B,D
			7x16	50	Image Legend	45	45	0	1544,-		B
			7x17	17	BM Drive M.Gun	45	45	0	1736,-	**OE-fit**	B,D
			7x17	20	ATS Antares	40	45	10	2264,-	**OE-fit**	B,C,D
			7x17	21	ATS Antares G.Blk	40	45	10	2380,-	**OE-fit**	B,C,D
			7x17	29	CSP 13	40	45	10	2152,-	**OE-fit**	B,C,D
			7x17	30	CSP 13 M.Gun	40	45	10	2152,-	**OE-fit**	B,C,D
			7x17	40	Image Spirit	40	45	10	1476,-	**OE-fit**	B,D
			7x17	46	Image Stella	40	45	10	1812,-	**OE-fit**	B,D
			7x17	47	Image Stella M.Blk	40	45	10	1812,-	**OE-fit**	B,D
			7x17	48	Image Motion	45	45	0	1736,-	**OE-fit**	B,C,D
			7x17	49	Image Motion G.Gun	45	45	0	1736,-	**OE-fit**	B,C,D
			7,5x17	9	Nitro Sabre G.Blk	45	45	0	3052,-		B
			7,5x17	16	Advanti Inizio DST	42	45	6	3324,-		B
			7,5x17	20	ATS Antares	45	45	0	2264,-		B,C
			7,5x17	21	ATS Antares G.Blk	45	45	0	2380,-		B,C
			7,5x17	36	Image Colt	45	45	0	1956,-		B
			7,5x17	50	Image Legend	45	45	0	1812,-	**OE-fit**	B,D
			7,5x17	92	Image Colt L.Gun	45	45	0	1876,-		B
			8x17	17	BM Drive M.Gun	45	45	0	1736,-		B
			8x17	48	Image Motion	45	45	0	1736,-		B,C

Forts. neste side »

Bilmerke - Bilmodell	Årsmodell	Dimensjon	Felgdim.	Bilde	Felgmodell	ET Felg	ET Bil	Avvik ET	Veil. Pris eks. MVA	Merknader	B,C D, M
VOLKSWAGEN (forts.)			PCD: **5-112** Bolt - Mutter: **14x1,50B** CB: **57,1**								
			8x18	7	Nitro Spark G.Blk/Grey	45	45	0	3476,-		B
			8x18	8	Nitro Spark G.Blk/Red	45	45	0	3476,-		B
			8x18	9	Nitro Sabre G.Blk	45	45	0	3496,-		B
			8x18	10	Nitro Demon H.Slv	40	45	10	2972,-		B,C
			8x18	11	Nitro Demon	40	45	10	2784,-		B,C
			8x18	16	Advanti Inizio DST	45	45	0	3828,-		B
			8x18	17	BM Drive M.Gun	40	45	10	2296,-	**OE-fit**	B,D
			8x18	20	ATS Antares	40	45	10	3056,-		B,C
			8x18	21	ATS Antares G.Blk	40	45	10	3136,-		B,C
			8x18	29	CSP 13	44	45	2	2932,-	**OE-fit**	B,C,D
			8x18	30	CSP 13 M.Gun	44	45	2	2932,-	**OE-fit**	B,C,D
			8x18	36	Image Colt	45	45	0	2412,-		B
			8x18	40	Image Spirit	40	45	10	1912,-	**OE-fit**	B,D
			8x18	46	Image Stella	40	45	10	2276,-	**OE-fit**	B,D
			8x18	47	Image Stella M.Blk	40	45	10	2276,-	**OE-fit**	B,D
			8x18	48	Image Motion	44	45	2	2204,-	**OE-fit**	B,C,D
			8x18	49	Image Motion G.Gun	44	45	2	2204,-	**OE-fit**	B,C,D
			8x18	50	Image Legend	45	45	0	2276,-	**OE-fit**	B,D
			8x18	92	Image Colt L.Gun	45	45	0	2296,-		B
			8x19	10	Nitro Demon H.Slv	40	45	10	3624,-		B,C
			8x19	16	Advanti Inizio DST	45	45	0	4412,-		B
			8x19	29	CSP 13	44	45	2	3404,-	**OE-fit**	B,C,D
			8x19	30	CSP 13 M.Gun	44	45	2	3404,-	**OE-fit**	B,C,D
			8x19	48	Image Motion	44	45	2	2532,-	**OE-fit**	B,C,D
			8x19	49	Image Motion G.Gun	44	45	2	2532,-	**OE-fit**	B,C,D
			8,5x19	3	Nitro Turismo FF	43	45	4	4492,-		D
			8,5x19	4	Nitro Turismo FF G.Gun/Pol	43	45	4	4644,-		D
			8,5x19	5	Nitro Volcano G.Gun	45	45	0	4388,-		
			8,5x19	6	Nitro Volcano	45	45	0	4632,-		
			8,5x19	9	Nitro Sabre G.Blk	45	45	0	4292,-		B
			8,5x19	36	Image Colt	45	45	0	3028,-		B
			8,5x19	92	Image Colt L.Gun	45	45	0	2876,-		B
			8,5x20	1	Nitro Throne FF	40	45	10	5060,-		M
			8,5x20	3	Nitro Turismo FF	43	45	4	4812,-		
			8,5x20	4	Nitro Turismo FF G.Gun/Pol	43	45	4	4964,-		
			8,5x20	5	Nitro Volcano G.Gun	45	45	0	4824,-		B
			8,5x20	6	Nitro Volcano	45	45	0	5164,-		B
			8,5x20	7	Nitro Spark G.Blk/Grey	45	45	0	4660,-		B
			8,5x20	8	Nitro Spark G.Blk/Red	45	45	0	4660,-		B
			8,5x20	9	Nitro Sabre G.Blk	45	45	0	4800,-		B
			8,5x20	10	Nitro Demon H.Slv	45	45	0	4104,-		B,C
			8,5x20	11	Nitro Demon	45	45	0	3808,-		B,C
			8,5x20	36	Image Colt	45	45	0	3432,-		B
			8,5x20	92	Image Colt L.Gun	45	45	0	3276,-		B
			9x21	5	Nitro Volcano G.Gun	45	45	0	5540,-		B,M
			9x21	6	Nitro Volcano	45	45	0	5996,-		B,M
VOLKSWAGEN			PCD: **5-112** Bolt - Mutter: **14x1,50B** CB: **57,1**								
Tiguan (5N)	03.16-	17-22	7x17	17	BM Drive M.Gun	40	40	0	1736,-	**OE-fit**	B,D
Tiguan (5N) Allspace	08.17-	17-22	7x17	20	ATS Antares	40	40	0	2264,-	**OE-fit**	B,C,D
			7x17	21	ATS Antares G.Blk	40	40	0	2380,-	**OE-fit**	B,C,D
			7x17	29	CSP 13	40	40	0	2152,-	**OE-fit**	B,C,D
			7x17	30	CSP 13 M.Gun	40	40	0	2152,-	**OE-fit**	B,C,D
			7x17	40	Image Spirit	40	40	0	1476,-	**OE-fit**	B,D
			7x17	46	Image Stella	40	40	0	1812,-	**OE-fit**	B,D
			7x17	47	Image Stella M.Blk	40	40	0	1812,-	**OE-fit**	B,D
			7x17	48	Image Motion	40	40	0	1736,-	**OE-fit**	B,C,D
			7x17	49	Image Motion G.Gun	40	40	0	1736,-	**OE-fit**	B,C,D
			7,5x17	16	Advanti Inizio DST	42	40	-4	3324,-		B
			7,5x17	36	Image Colt	35	40	10	1956,-		B
			7,5x17	46	Image Stella	35	40	10	1812,-		B
			7,5x17	47	Image Stella M.Blk	35	40	10	1812,-		B
			7,5x17	50	Image Legend	40	40	0	1812,-	**OE-fit**	B,D
			7,5x17	92	Image Colt L.Gun	35	40	10	1876,-		B
			8x17	9	Nitro Sabre G.Blk	35	40	10	3108,-		B
			8x17	17	BM Drive M.Gun	35	40	10	1736,-		B
			8x17	48	Image Motion	35	40	10	1736,-		B,C
			8x17	49	Image Motion G.Gun	35	40	10	1736,-		B
			7,5x18	29	CSP 13	35	40	10	2932,-	**OE-fit**	B,C,D
			7,5x18	30	CSP 13 M.Gun	35	40	10	2932,-	**OE-fit**	B,C,D
			8x18	2	Nitro Sapphire FF	39	40	2	4036,-		B
			8x18	7	Nitro Spark G.Blk/Grey	35	40	10	3476,-		B
			8x18	9	Nitro Sabre G.Blk	35	40	10	3496,-		B
			8x18	10	Nitro Demon H.Slv	40	40	0	2972,-		B,C
			8x18	11	Nitro Demon	40	40	0	2784,-		B,C
			8x18	16	Advanti Inizio DST	35	40	10	3828,-		B
			8x18	17	BM Drive M.Gun	40	40	0	2296,-	**OE-fit**	B,D
			8x18	20	ATS Antares	40	40	0	3056,-		B
			8x18	21	ATS Antares G.Blk	40	40	0	3136,-		B,C
			8x18	29	CSP 13	40	40	0	2932,-	**OE-fit**	B,C,D
			8x18	30	CSP 13 M.Gun	40	40	0	2932,-	**OE-fit**	B,C,D
			8x18	36	Image Colt	35	40	10	2412,-		B
			8x18	40	Image Spirit	40	40	0	1912,-	**OE-fit**	B,D
			8x18	46	Image Stella	40	40	0	2276,-	**OE-fit**	B,D
			8x18	47	Image Stella M.Blk	40	40	0	2276,-	**OE-fit**	B,D
			8x18	48	Image Motion	44	40	-8	2204,-	**OE-fit**	B,C,D
			8x18	49	Image Motion G.Gun	44	40	-8	2204,-	**OE-fit**	B,C,D

Forts. neste side »

Bilmerke - Bilmodell	Årsmodell	Dimensjon	Felgdim.	Bilde	Felgmodell	ET Felg	ET Bil	Avvik ET	Veil. Pris eks. MVA	Merknader	B,C D, M
VOLKSWAGEN (forts.)				PCD: **5-112** Bolt - Mutter: **14x1,50B** CB: **57,1**							
			8x18	50	Image Legend	40	40	0	2276,-	**OE-fit**	B,D
			8x18	92	Image Colt L.Gun	35	40	10	2296,-		B
			8,5x18	16	Advanti Inizio DST	35	40	10	3828,-		B
			8x19	2	Nitro Sapphire FF	39	40	2	4684,-		B
			8x19	3	Nitro Turismo FF	30	40	20	4492,-		
			8x19	4	Nitro Turismo FF G.Gun/Pol	30	40	20	4644,-		
			8x19	10	Nitro Demon H.Slv	40	40	0	3624,-		B,C
			8x19	16	Advanti Inizio DST	35	40	10	4412,-		B
			8x19	29	CSP 13	40	40	0	3404,-	**OE-fit**	B,C,D
			8x19	30	CSP 13 M.Gun	40	40	0	3404,-	**OE-fit**	B,C,D
			8x19	48	Image Motion	44	40	-8	2532,-	**OE-fit**	B,C,D
			8x19	49	Image Motion G.Gun	44	40	-8	2532,-	**OE-fit**	B,C,D
			8,5x19	2	Nitro Sapphire FF	40	40	0	4684,-		B
			8,5x19	3	Nitro Turismo FF	35	40	10	4492,-		
			8,5x19	4	Nitro Turismo FF G.Gun/Pol	35	40	10	4644,-		
			8,5x19	5	Nitro Volcano G.Gun	32	40	16	4388,-		
			8,5x19	6	Nitro Volcano	32	40	16	4632,-		
			8,5x19	9	Nitro Sabre G.Blk	35	40	10	4292,-		B
			8,5x19	16	Advanti Inizio DST	35	40	10	4412,-		B
			8,5x19	36	Image Colt	35	40	10	3028,-		B
			8,5x19	92	Image Colt L.Gun	35	40	10	2876,-		B
			8,5x20	1	Nitro Throne FF	40	40	0	5060,-		
			8,5x20	2	Nitro Sapphire FF	40	40	0	5216,-		B
			8,5x20	3	Nitro Turismo FF	35	40	10	4812,-		
			8,5x20	4	Nitro Turismo FF G.Gun/Pol	35	40	10	4964,-		
			8,5x20	7	Nitro Spark G.Blk/Grey	35	40	10	4660,-		B
			8,5x20	9	Nitro Sabre G.Blk	35	40	10	4800,-		B
			8,5x20	10	Nitro Demon H.Slv	38	40	4	4104,-		B,C
			8,5x20	11	Nitro Demon	38	40	4	3808,-		B,C
			8,5x20	36	Image Colt	35	40	10	3432,-		B
			8,5x20	92	Image Colt L.Gun	35	40	10	3276,-		B
			9x20	1	Nitro Throne FF	35	40	10	5060,-		
			9x20	3	Nitro Turismo FF	30	40	20	4960,-		M
			9x20	4	Nitro Turismo FF G.Gun/Pol	30	40	20	5048,-		M
			9x20	5	Nitro Volcano G.Gun	32	40	16	4824,-		B
			9x20	6	Nitro Volcano	32	40	16	5164,-		B
			9x20	10	Nitro Demon H.Slv	40	40	0	4104,-		B,C
			9x20	11	Nitro Demon	40	40	0	3808,-		B
			9x20	15	Nitro Magnum	35	40	10	4572,-		
			9x21	5	Nitro Volcano G.Gun	32	40	16	5540,-		B
			9x21	6	Nitro Volcano	32	40	16	5996,-		B
			9x22	12	Nitro Edge M.Blk	40	40	0	4888,-		
			9x22	15	Nitro Magnum	35	40	10	5420,-		
VOLKSWAGEN				PCD: **5-120** Bolt - Mutter: **14x1,50B** CB: **65,1**							
T5 Transporter	05.03-10.09	16-20	6,5x16	54	Image Vector	51	51	0	1956,-	**OE-fit**	B,C,D
3.2 (173kW) 17"			6,5x16	55	Image Vector Slv	51	51	0	1956,-	**OE-fit**	B,C,D
bultlängd 35-40mm alla T5			7x17	54	Image Vector	55	51	-8	2576,-	**OE-fit**	B,C,D
T5 Transporter	11.09-07.15	16-20	7x17	55	Image Vector Slv	55	51	-8	2576,-	**OE-fit**	B,C,D
2.0BiTDI (132kW), 2.0TSI (150kW) 17"			7,5x17	68	BM Macho	45	51	12	2756,-	Maks bel. 955 kg	D
T6 Transporter	08.15-	16-20	7,5x17	69	BM Macho M.Blk	45	51	12	2756,-	Maks bel. 955 kg	D
2.0TSI (150kW) 17"			8x18	53	Nitro Hammer	48	51	6	3256,-	**OE-fit**	B,D
2.0TDI (150kW) 17"			8x18	68	BM Macho	45	51	12	3300,-	Maks bel. 955 kg	D
			8x18	69	BM Macho M.Blk	45	51	12	3300,-	Maks bel. 955 kg	D
			9x19	11	Nitro Demon	45	51	12	3376,-		
			9x19	12	Nitro Edge M.Blk	45	51	12	3884,-	**OE-fit**	B,D
			9x19	26	CSP 18 G.Blk/pol	40	51	22	3596,-		
			9x19	27	CSP 18	40	51	22	3444,-		
			9x19	28	CSP 18 G.Blk	40	51	22	3444,-		
			8,5x20	53	Nitro Hammer	48	51	6	4268,-	**OE-fit**	B,D
			9x20	12	Nitro Edge M.Blk	45	51	12	4220,-	**OE-fit**	B,D
			9x20	15	Nitro Magnum	40	51	22	4572,-		M
			9x20	68	BM Macho	45	51	12	4288,-	Maks bel. 955 kg	D
			9x20	69	BM Macho M.Blk	45	51	12	4288,-	Maks bel. 955 kg	D
			9x20	72	Ballistic Dakota	45	51	12	4624,-	Maks bel. 955 kg	D
			9x22	12	Nitro Edge M.Blk	45	51	12	4888,-	**OE-fit**	B,D
			9x22	15	Nitro Magnum	40	51	22	5420,-		M
			9x22	72	Ballistic Dakota	45	51	12	5128,-	Maks bel. 955 kg	D
VOLKSWAGEN				PCD: **5-120** Bolt - Mutter: **14x1,50B** CB: **65,1**							
Amarok (2H)	06.10-09.16	16-22	6,5x16	54	Image Vector	51	51	0	1956,-	**OE-fit**	B,C,D
2.0BiTDI (132kW) 17"			6,5x16	55	Image Vector Slv	51	51	0	1956,-	**OE-fit**	B,C,D
Amarok (2H) Facelift	10.16-	17-22	7x17	54	Image Vector	55	51	-8	2576,-	**OE-fit**	B,C,D
3.0TDI 190kW 18"			7x17	55	Image Vector Slv	55	51	-8	2576,-	**OE-fit**	B,C,D
			7,5x17	68	BM Macho	45	51	12	2756,-		D
			7,5x17	69	BM Macho M.Blk	45	51	12	2756,-		D
			8x18	53	Nitro Hammer	48	51	6	3256,-	**OE-fit**	B,D
			8x18	68	BM Macho	45	51	12	3300,-		D
			8x18	69	BM Macho M.Blk	45	51	12	3300,-		D
			9x19	11	Nitro Demon	45	51	12	3376,-		
			9x19	12	Nitro Edge M.Blk	45	51	12	3884,-	**OE-fit**	B,D
			9x19	26	CSP 18 G.Blk/pol	40	51	22	3596,-		
			9x19	27	CSP 18	40	51	22	3444,-		
			9x19	28	CSP 18 G.Blk	40	51	22	3444,-		
			8,5x20	53	Nitro Hammer	48	51	6	4268,-	**OE-fit**	B,D
			9x20	12	Nitro Edge M.Blk	45	51	12	4220,-	**OE-fit**	B,D
			9x20	15	Nitro Magnum	40	51	22	4572,-		M
			9x20	68	BM Macho	45	51	12	4288,-		D

Forts. neste side »

Bilmerke - Bilmodell	Årsmodell	Dimensjon	Felgdim.	Bilde	Felgmodell	ET Felg	ET Bil	Avvik ET	Veil. Pris eks. MVA	Merknader	B,C D, M
VOLKSWAGEN (forts.)			PCD: **5-120** Bolt - Mutter: **14x1,50B** CB: **65,1**								
			9x20	69	BM Macho M.Blk	45	51	12	4288,-		D
			9x20	72	Ballistic Dakota	45	51	12	4624,-		D
			9,5x20	11	Nitro Demon	45	51	12	3808,-		M
			9x22	12	Nitro Edge M.Blk	45	51	12	4888,-	**OE-fit**	B,D
			9x22	15	Nitro Magnum	40	51	22	5420,-		M
			9x22	72	Ballistic Dakota	45	51	12	5128,-		D
VOLKSWAGEN			PCD: **5-130** Bolt - Mutter: **14x1,50B** CB: **84,1**								
LT 28	08.96-12.99	15-17	6x15	65	CSP Work	50	75	50	2196,-	Maks bel. 955 kg	D
LT 28/35	01.00-05.06	15-18									
VOLKSWAGEN			PCD: **6-130** Bolt - Mutter: **14x1,50B** CB: **84,1**								
Crafter 30/35	06.06-06.13	16-20	6,5x16	58	Image Strong	62	62	0	2500,-		D
Crafter 30/35	07.13-02.17	16-22	6,5x16	59	Image Strong M.Gun	62	62	0	2500,-		D
			6,5x17	58	Image Strong	62	62	0	2884,-		D
			6,5x17	59	Image Strong M.Gun	62	62	0	2884,-		D
			7,5x17	67	Image Rock	55	62	14	2796,-	**OE-fit**, Maks bel. 955 kg	B,D
			7,5x18	67	Image Rock	55	62	14	3324,-	**OE-fit**, Maks bel. 955 kg	B,D
			9x20	72	Ballistic Dakota	52	62	20	4624,-	Maks bel. 955 kg	D,M
VOLKSWAGEN			PCD: **5-120** Bolt - Mutter: **14x1,50B** CB: **65,1**								
Crafter (SYN1E) 30/35	03.17-	16-22	6,5x16	58	Image Strong	60	60	0	2500,-	**OE-fit**	B,D
			6,5x16	59	Image Strong M.Gun	60	60	0	2500,-	**OE-fit**	B,D
			6,5x16	61	Image Solid	60	60	0	2552,-	**OE-fit**, Maks bel. 1400 kg	B,D
			6,5x17	58	Image Strong	60	60	0	2884,-	**OE-fit**, Maks bel. 1400 kg	B,D
			6,5x17	59	Image Strong M.Gun	60	60	0	2884,-	**OE-fit**, Maks bel. 1400 kg	B,D
			7,5x18	58	Image Strong	55	60	10	3524,-	**OE-fit**, Maks bel. 1400 kg	B,D
			7,5x18	59	Image Strong M.Gun	55	60	10	3524,-	**OE-fit**, Maks bel. 1400 kg	B,D
			9x20	72	Ballistic Dakota	45	60	30	4624,-	Maks bel. 955 kg	D
			9x22	72	Ballistic Dakota	45	60	30	5128,-	Maks bel. 955 kg	D
VOLVO			PCD: **4-114,3** Bolt - Mutter: **12x1,50** CB: **67,1**								
S40	03.96-12.03	14-19	6x15	37	Image Comet	40	44	8	1316,-		D
(03.96-08.97 kan ha 14")			6x15	38	Image Comet Slv	40	44	8	1316,-		D
V40	03.96-12.03	14-19	6x16	37	Image Comet	40	44	8	1536,-		
(03.96-08.97 kan ha 14")											
VOLVO			PCD: **5-108** Bolt - Mutter: **12x1,50** CB: **63,4**								
C30 (M)	12.06-12.12	15-20	6x15	17	BM Drive M.Gun	40	53	25	1276,-		
2.0, 2.0D, 2.4i 16"			6x15	48	Image Motion	40	53	25	1224,-		B,C
D5, T5 16"			6x15	49	Image Motion G.Gun	40	53	25	1224,-		B,C
S40 (M)	01.04-04.12	15-20	6,5x16	36	Image Colt	45	53	15	1624,-	**OE-fit**	B,D
2.0, 2.0D, 2.4 16"			6,5x16	92	Image Colt L.Gun	45	53	15	1548,-	**OE-fit**	B,D
2.4i, D5, T5 16"			7x16	17	BM Drive M.Gun	50	53	5	1476,-		D
V40 (M)	05.12-06.19	15-20	7x16	40	Image Spirit	45	53	15	1264,-	**OE-fit**	B,D
D3, D4 16"			7x16	46	Image Stella	50	53	5	1548,-	**OE-fit**	B,C,D
T2, T3, T4, T5 16"			7x16	47	Image Stella M.Blk	50	53	5	1548,-	**OE-fit**	B,C,D
V40 (M) Cross Country	10.12-06.19	16-20	7x16	48	Image Motion	50	53	5	1468,-	**OE-fit**	B,C,D
V50 (M)	04.04-04.12	15-20	7x16	49	Image Motion G.Gun	50	53	5	1468,-	**OE-fit**	B,C,D
2.0, 2.0D, 2.4 16"			7x16	50	Image Legend	50	53	5	1544,-	**OE-fit**	B,D
2.4i, D5, T5 16"			7,5x17	9	Nitro Sabre G.Blk	45	53	15	3052,-	**OE-fit**	B,D
			7,5x17	36	Image Colt	47	53	11	1956,-	**OE-fit**	B,D
			7,5x17	46	Image Stella	50	53	5	1812,-	**OE-fit**	B,C,D
			7,5x17	47	Image Stella M.Blk	50	53	5	1812,-	**OE-fit**	B,C,D
			7,5x17	50	Image Legend	45	53	15	1812,-	**OE-fit**	B,D
			7,5x17	92	Image Colt L.Gun	47	53	11	1876,-	**OE-fit**	B,D
			8x17	17	BM Drive M.Gun	48	53	9	1736,-		D
			8x17	48	Image Motion	50	53	5	1736,-	**OE-fit**	B,C,D
			8x17	49	Image Motion G.Gun	50	53	5	1736,-	**OE-fit**	B,C,D
			7,5x18	2	Nitro Sapphire FF	50	53	5	3944,-	**OE-fit**	B,C,D
			7,5x18	46	Image Stella	50	53	5	2276,-	**OE-fit**	B,C,D
			7,5x18	47	Image Stella M.Blk	50	53	5	2276,-	**OE-fit**	B,C,D
			8x18	7	Nitro Spark G.Blk/Grey	47	53	11	3476,-	**OE-fit**	B,D
			8x18	8	Nitro Spark G.Blk/Red	45	53	15	3476,-		B
			8x18	9	Nitro Sabre G.Blk	47	53	11	3496,-	**OE-fit**	B,D
			8x18	10	Nitro Demon H.Slv	48	53	9	2972,-		D
			8x18	11	Nitro Demon	48	53	9	2784,-		D
			8x18	16	Advanti Inizio DST	42	53	21	3828,-	**OE-fit**	B,D,M
			8x18	17	BM Drive M.Gun	48	53	9	2296,-		D
			8x18	36	Image Colt	47	53	11	2412,-	**OE-fit**	B,D
			8x18	41	Image Thor	42	53	21	2412,-	**OE-fit**	B,C,D
			8x18	48	Image Motion	50	53	5	2204,-	**OE-fit**	B,C,D
			8x18	49	Image Motion G.Gun	50	53	5	2204,-	**OE-fit**	B,C,D
			8x18	50	Image Legend	50	53	5	2276,-	**OE-fit**	B,D
			8x18	92	Image Colt L.Gun	47	53	11	2296,-	**OE-fit**	B,D
			7,5x19	2	Nitro Sapphire FF	50	53	5	4572,-	**OE-fit**	B,C,D
			8x19	3	Nitro Turismo FF	50	53	5	4492,-	**OE-fit**	B,C,D
			8x19	4	Nitro Turismo FF G.Gun/Pol	50	53	5	4644,-	**OE-fit**	B,C,D
			8x19	10	Nitro Demon H.Slv	48	53	9	3624,-		D
			8x19	11	Nitro Demon	48	53	9	3376,-		D
			8x19	16	Advanti Inizio DST	42	53	21	4412,-	**OE-fit**	B,D,M
			8x19	48	Image Motion	50	53	5	2532,-	**OE-fit**	B,C,D
			8x19	49	Image Motion G.Gun	50	53	5	2532,-	**OE-fit**	B,C,D
			8,5x19	3	Nitro Turismo FF	45	53	15	4492,-	**OE-fit**	B,C,D,M
			8,5x19	4	Nitro Turismo FF G.Gun/Pol	45	53	15	4644,-	**OE-fit**	B,C,D,M
			8,5x19	5	Nitro Volcano G.Gun	45	53	15	4388,-	**OE-fit**	B,C,D
			8,5x19	6	Nitro Volcano	45	53	15	4632,-	**OE-fit**	B,C,D,M
			8,5x19	9	Nitro Sabre G.Blk	47	53	11	4292,-	**OE-fit**	B,D,M
			8,5x19	36	Image Colt	47	53	11	3028,-	**OE-fit**	B,D,M
			8,5x19	41	Image Thor	47	53	11	3048,-	**OE-fit**	B,C,D

Forts. neste side »

Bilmerke - Bilmodell	Årsmodell	Dimensjon	Felgdim.	Bilde	Felgmodell	ET Felg	ET Bil	Avvik ET	Veil. Pris eks. MVA	Merknader	B,C D, M
VOLVO (forts.)				PCD: **5-108** Bolt - Mutter: **12x1,50**	CB: **63,4**						
			8,5x19	92	Image Colt L.Gun	47	53	11	2876,-	**OE-fit**	B,D,M
			8x20	2	Nitro Sapphire FF	50	53	5	5096,-	**OE-fit**	B,C,D
			8x20	3	Nitro Turismo FF	45	53	15	4812,-	**OE-fit**	B,C,D
			8x20	4	Nitro Turismo FF G.Gun/Pol	45	53	15	4964,-	**OE-fit**	B,C,D
			8,5x20	2	Nitro Sapphire FF	47	53	11	5216,-	**OE-fit**	B,C,D,M
			8,5x20	3	Nitro Turismo FF	45	53	15	4812,-	**OE-fit**	B,C,D,M
			8,5x20	4	Nitro Turismo FF G.Gun/Pol	45	53	15	4964,-	**OE-fit**	B,C,D,M
			8,5x20	5	Nitro Volcano G.Gun	45	53	15	4824,-	**OE-fit**	B,C,D,M
			8,5x20	6	Nitro Volcano	45	53	15	5164,-	**OE-fit**	B,C,D,M
			8,5x20	7	Nitro Spark G.Blk/Grey	47	53	11	4660,-	**OE-fit**	B,D,M
			8,5x20	8	Nitro Spark G.Blk/Red	45	53	15	4660,-		B,M
			8,5x20	9	Nitro Sabre G.Blk	47	53	11	4800,-	**OE-fit**	B,D,M
			8,5x20	10	Nitro Demon H.Slv	45	53	15	4104,-		D,M
			8,5x20	11	Nitro Demon	45	53	15	3808,-		D,M
			8,5x20	36	Image Colt	47	53	11	3432,-	**OE-fit**	B,D,M
			8,5x20	92	Image Colt L.Gun	47	53	11	3276,-	**OE-fit**	B,D,M
VOLVO				PCD: **5-108** Bolt - Mutter: **12x1,50**	CB: **63,4**						
C70 (M)	05.06-07.13	16-20	6,5x16	36	Image Colt	40	45	10	1624,-		B
			6,5x16	92	Image Colt L.Gun	40	45	10	1548,-		B
			7x16	17	BM Drive M.Gun	40	45	10	1476,-		
			7x16	40	Image Spirit	45	45	0	1264,-	**OE-fit**	B,D
			7x16	46	Image Stella	40	45	10	1548,-		B,C
			7x16	47	Image Stella M.Blk	40	45	10	1548,-		B,C
			7x16	48	Image Motion	40	45	10	1468,-		B,C
			7x16	49	Image Motion G.Gun	40	45	10	1468,-		B,C
			7x16	50	Image Legend	40	45	10	1544,-		B
			7,5x17	36	Image Colt	40	45	10	1956,-		B
			7,5x17	46	Image Stella	42	45	6	1812,-	**OE-fit**	B,C,D
			7,5x17	47	Image Stella M.Blk	42	45	6	1812,-	**OE-fit**	B,C,D
			7,5x17	50	Image Legend	40	45	10	1812,-		B
			7,5x17	92	Image Colt L.Gun	40	45	10	1876,-		B
			8x17	9	Nitro Sabre G.Blk	42	45	6	3108,-	**OE-fit**	B,D
			8x17	17	BM Drive M.Gun	42	45	6	1736,-		D
			8x17	40	Image Spirit	42	45	6	1476,-	**OE-fit**	B,D
			8x17	48	Image Motion	42	45	6	1736,-	**OE-fit**	B,C,D
			8x17	49	Image Motion G.Gun	42	45	6	1736,-	**OE-fit**	B,C,D
			8x18	2	Nitro Sapphire FF	42	45	6	4036,-	**OE-fit**	B,C,D
			8x18	7	Nitro Spark G.Blk/Grey	42	45	6	3476,-	**OE-fit**	B,D
			8x18	8	Nitro Spark G.Blk/Red	45	45	0	3476,-		B
			8x18	9	Nitro Sabre G.Blk	42	45	6	3496,-	**OE-fit**	B,D
			8x18	10	Nitro Demon H.Slv	40	45	10	2972,-		D
			8x18	11	Nitro Demon	40	45	10	2784,-		D
			8x18	17	BM Drive M.Gun	42	45	6	2296,-		D
			8x18	36	Image Colt	42	45	6	2412,-		B
			8x18	40	Image Spirit	42	45	6	1912,-	**OE-fit**	B,D
			8x18	41	Image Thor	42	45	6	2412,-	**OE-fit**	B,C,D
			8x18	46	Image Stella	42	45	6	2276,-	**OE-fit**	B,C,D
			8x18	47	Image Stella M.Blk	42	45	6	2276,-	**OE-fit**	B,C,D
			8x18	48	Image Motion	42	45	6	2204,-	**OE-fit**	B,C,D
			8x18	49	Image Motion G.Gun	42	45	6	2204,-	**OE-fit**	B,C,D
			8x18	50	Image Legend	42	45	6	2276,-	**OE-fit**	B,D
			8x18	92	Image Colt L.Gun	42	45	6	2296,-		B
			8x19	2	Nitro Sapphire FF	42	45	6	4684,-	**OE-fit**	B,C,D
			8x19	3	Nitro Turismo FF	42	45	6	4492,-	**OE-fit**	B,C,D
			8x19	4	Nitro Turismo FF G.Gun/Pol	42	45	6	4644,-	**OE-fit**	B,C,D
			8x19	10	Nitro Demon H.Slv	40	45	10	3624,-		D
			8x19	11	Nitro Demon	40	45	10	3376,-		D
			8x19	16	Advanti Inizio DST	42	45	6	4412,-	**OE-fit**	B,D
			8x19	48	Image Motion	42	45	6	2532,-	**OE-fit**	B,C,D
			8x19	49	Image Motion G.Gun	42	45	6	2532,-	**OE-fit**	B,C,D
			8,5x19	3	Nitro Turismo FF	45	45	0	4492,-	**OE-fit**	B,C,D
			8,5x19	4	Nitro Turismo FF G.Gun/Pol	45	45	0	4644,-	**OE-fit**	B,C,D
			8,5x19	5	Nitro Volcano G.Gun	40	45	10	4388,-	**OE-fit**	B,C,D
			8,5x19	6	Nitro Volcano	40	45	10	4632,-	**OE-fit**	B,C,D
			8,5x19	9	Nitro Sabre G.Blk	40	45	10	4292,-	**OE-fit**	B,D
			8,5x19	36	Image Colt	42	45	6	3028,-		B
			8,5x19	41	Image Thor	40	45	10	3048,-		B,C
			8,5x19	92	Image Colt L.Gun	42	45	6	2876,-		B
			8x20	2	Nitro Sapphire FF	45	45	0	5096,-	**OE-fit**	B,C,D
			8x20	3	Nitro Turismo FF	45	45	0	4812,-	**OE-fit**	B,C,D
			8x20	4	Nitro Turismo FF G.Gun/Pol	45	45	0	4964,-	**OE-fit**	B,C,D
			8,5x20	1	Nitro Throne FF	40	45	10	5060,-	**OE-fit**	B,C,D
			8,5x20	3	Nitro Turismo FF	45	45	0	4812,-	**OE-fit**	B,C,D
			8,5x20	4	Nitro Turismo FF G.Gun/Pol	45	45	0	4964,-	**OE-fit**	B,C,D
			8,5x20	5	Nitro Volcano G.Gun	45	45	0	4824,-	**OE-fit**	B,C,D
			8,5x20	6	Nitro Volcano	45	45	0	5164,-	**OE-fit**	B,C,D
			8,5x20	7	Nitro Spark G.Blk/Grey	42	45	6	4660,-	**OE-fit**	B,D
			8,5x20	8	Nitro Spark G.Blk/Red	45	45	0	4660,-		B
			8,5x20	9	Nitro Sabre G.Blk	40	45	10	4800,-	**OE-fit**	B,D
			8,5x20	10	Nitro Demon H.Slv	45	45	0	4104,-		D
			8,5x20	11	Nitro Demon	45	45	0	3808,-		D
			8,5x20	36	Image Colt	42	45	6	3432,-		B
			8,5x20	92	Image Colt L.Gun	42	45	6	3276,-		B
			9x20	1	Nitro Throne FF	40	45	10	5060,-	**OE-fit**	B,C,D,M
			9x20	5	Nitro Volcano G.Gun	40	45	10	4824,-	**OE-fit**	B,C,D,M
			9x20	6	Nitro Volcano	40	45	10	5164,-	**OE-fit**	B,C,D,M
			9x20	15	Nitro Magnum	38	45	14	4572,-		D,M

Bilmerke - Bilmodell	Årsmodell	Dimensjon	Felgdim.	Bilde	Felgmodell	ET Felg	ET Bil	Avvik ET	Veil. Pris eks. MVA	Merknader	B,C D, M
VOLVO			PCD: **5-108** Bolt - Mutter: **14x1,50B**		CB: **65,1**						
S60	11.00-05.10	15-20	6x15	17	BM Drive M.Gun	40	49	18	1276,-		D
2.4T, Bi-fuel 16"			6x15	48	Image Motion	40	49	18	1224,-	**OE-fit**	B,C,D
T5, D5 (136kW) 16"			6x15	49	Image Motion G.Gun	40	49	18	1224,-	**OE-fit**	B,C,D
S80	10.98-04.06	15-20	6,5x16	36	Image Colt	40	49	18	1624,-	**OE-fit**	B,D
2.4T, 2.9i, T6 16"			6,5x16	92	Image Colt L.Gun	40	49	18	1548,-	**OE-fit**	B,D
V70	03.00-09.07	15-20	7x16	17	BM Drive M.Gun	40	49	18	1476,-		D
2.4T, Bi-fuel 16"			7x16	40	Image Spirit	40	49	18	1264,-	**OE-fit**	B,D
T5, D5 (136kW) 16"			7x16	46	Image Stella	40	49	18	1548,-	**OE-fit**	B,C,D
XC70	08.00-06.07	16-20	7x16	47	Image Stella M.Blk	40	49	18	1548,-	**OE-fit**	B,C,D
			7x16	48	Image Motion	40	49	18	1468,-	**OE-fit**	B,C,D
			7x16	49	Image Motion G.Gun	40	49	18	1468,-	**OE-fit**	B,C,D
			7x16	50	Image Legend	40	49	18	1544,-	**OE-fit**	B,D
			7x17	40	Image Spirit	42	49	14	1476,-	**OE-fit**	B,D
			7x17	46	Image Stella	42	49	14	1812,-	**OE-fit**	B,C,D
			7x17	47	Image Stella M.Blk	42	49	14	1812,-	**OE-fit**	B,C,D
			7,5x17	36	Image Colt	40	49	18	1956,-	**OE-fit**	B,D
			7,5x17	50	Image Legend	40	49	18	1812,-	**OE-fit**	B,D
			7,5x17	92	Image Colt L.Gun	40	49	18	1876,-	**OE-fit**	B,D
			8x17	17	BM Drive M.Gun	45	49	8	1736,-		D
			8x17	48	Image Motion	45	49	8	1736,-	**OE-fit**	B,C,D
			8x18	7	Nitro Spark G.Blk/Grey	45	49	8	3476,-		D
			8x18	8	Nitro Spark G.Blk/Red	45	49	8	3476,-		D
			8x18	11	Nitro Demon	40	49	18	2784,-		D
			8x18	17	BM Drive M.Gun	45	49	8	2296,-		D
			8x18	36	Image Colt	42	49	14	2412,-	**OE-fit**	B,D
			8x18	48	Image Motion	45	49	8	2204,-	**OE-fit**	B,C,D
			8x18	53	Nitro Hammer	42	49	14	3256,-		D
			8x18	92	Image Colt L.Gun	42	49	14	2296,-	**OE-fit**	B,D
			8x19	11	Nitro Demon	40	49	18	3376,-		D
			8x19	48	Image Motion	45	49	8	2532,-	**OE-fit**	B,C,D
			8,5x19	36	Image Colt	42	49	14	3028,-	**OE-fit**	B,D,M
			8,5x19	41	Image Thor	40	49	18	3048,-		B,C,M
			8,5x19	92	Image Colt L.Gun	42	49	14	2876,-	**OE-fit**	B,D,M
			8,5x20	7	Nitro Spark G.Blk/Grey	45	49	8	4660,-		D,M
			8,5x20	8	Nitro Spark G.Blk/Red	45	49	8	4660,-		D,M
			8,5x20	11	Nitro Demon	45	49	8	3808,-		D,M
			8,5x20	36	Image Colt	42	49	14	3432,-	**OE-fit**	B,D,M
			8,5x20	53	Nitro Hammer	42	49	14	4268,-		D
			8,5x20	92	Image Colt L.Gun	42	49	14	3276,-	**OE-fit**	B,D
VOLVO			PCD: **5-108** Bolt - Mutter: **14x1,50B**		CB: **63,4**						
S60 (F)	06.10-11.18	16-20	6,5x16	36	Image Colt	45	50	10	1624,-	**OE-fit**	B,D
T6 17"			6,5x16	92	Image Colt L.Gun	45	50	10	1548,-	**OE-fit**	B,D
S60 (F) Cross Country	05.15-11.18	16-21	7x16	17	BM Drive M.Gun	50	50	0	1476,-	**OE-fit**	B,D
S80 (A)	05.06-05.16	16-20	7x16	40	Image Spirit	45	50	10	1264,-	**OE-fit**	B,D
T6, V8 17"			7x16	46	Image Stella	50	50	0	1548,-	**OE-fit**	B,C,D
V60 (F)	11.10-09.18	16-20	7x16	47	Image Stella M.Blk	50	50	0	1548,-	**OE-fit**	B,C,D
T6 17"			7x16	48	Image Motion	50	50	0	1468,-	**OE-fit**	B,C,D
Hybrid 17"			7x16	49	Image Motion G.Gun	50	50	0	1468,-	**OE-fit**	B,C,D
V60 (F) Cross Country	05.15-09.18	16-21	7x16	50	Image Legend	50	50	0	1544,-	**OE-fit**	B,D
V70 (B)	06.07-04.16	16-20	7,5x17	9	Nitro Sabre G.Blk	45	50	10	3052,-	**OE-fit**	B,D
T6 17"			7,5x17	22	ATS Evolution	50	50	0	2268,-	**OE-fit**	B,C,D
XC60 (D)	11.08-04.17	17-22	7,5x17	23	ATS Evolution G.Grey	50	50	0	2340,-	**OE-fit**	B,C,D
XC70 (B)	06.07-05.16	16-21	7,5x17	36	Image Colt	47	50	6	1956,-	**OE-fit**	B,D
T6 17"			7,5x17	46	Image Stella	50	50	0	1812,-	**OE-fit**	B,C,D
			7,5x17	47	Image Stella M.Blk	50	50	0	1812,-	**OE-fit**	B,C,D
			7,5x17	50	Image Legend	45	50	10	1812,-	**OE-fit**	B,D
			7,5x17	92	Image Colt L.Gun	47	50	6	1876,-	**OE-fit**	B,D
			8x17	9	Nitro Sabre G.Blk	42	50	16	3108,-	**OE-fit**	B,D
			8x17	17	BM Drive M.Gun	48	50	4	1736,-	**OE-fit**	B,D
			8x17	40	Image Spirit	42	50	16	1476,-	**OE-fit**	B,D
			8x17	48	Image Motion	50	50	0	1736,-	**OE-fit**	B,C,D
			8x17	49	Image Motion G.Gun	50	50	0	1736,-	**OE-fit**	B,C,D
			7,5x18	2	Nitro Sapphire FF	50	50	0	3944,-	**OE-fit**	B,C,D
			7,5x18	22	ATS Evolution	50	50	0	3016,-	**OE-fit**	B,C,D
			7,5x18	23	ATS Evolution G.Grey	50	50	0	3116,-	**OE-fit**	B,C,D
			7,5x18	46	Image Stella	50	50	0	2276,-	**OE-fit**	B,C,D
			7,5x18	47	Image Stella M.Blk	50	50	0	2276,-	**OE-fit**	B,C,D
			8x18	2	Nitro Sapphire FF	42	50	16	4036,-	**OE-fit**	B,C,D
			8x18	7	Nitro Spark G.Blk/Grey	47	50	6	3476,-	**OE-fit**	B,D
			8x18	8	Nitro Spark G.Blk/Red	45	50	10	3476,-		B
			8x18	9	Nitro Sabre G.Blk	47	50	6	3496,-	**OE-fit**	B,D
			8x18	10	Nitro Demon H.Slv	48	50	4	2972,-	**OE-fit**	B,D
			8x18	11	Nitro Demon	48	50	4	2784,-	**OE-fit**	B,D
			8x18	16	Advanti Inizio DST	42	50	16	3828,-	**OE-fit**	B,D
			8x18	17	BM Drive M.Gun	48	50	4	2296,-	**OE-fit**	B,D
			8x18	36	Image Colt	47	50	6	2412,-	**OE-fit**	B,D
			8x18	40	Image Spirit	42	50	16	1912,-	**OE-fit**	B,D
			8x18	41	Image Thor	42	50	16	2412,-	**OE-fit**	B,C,D
			8x18	46	Image Stella	42	50	16	2276,-	**OE-fit**	B,C,D
			8x18	47	Image Stella M.Blk	42	50	16	2276,-	**OE-fit**	B,C,D
			8x18	48	Image Motion	50	50	0	2204,-	**OE-fit**	B,C,D
			8x18	49	Image Motion G.Gun	50	50	0	2204,-	**OE-fit**	B,C,D
			8x18	50	Image Legend	50	50	0	2276,-	**OE-fit**	B,D
			8x18	92	Image Colt L.Gun	47	50	6	2296,-	**OE-fit**	B,D
			7,5x19	2	Nitro Sapphire FF	50	50	0	4572,-	**OE-fit**	B,C,D
			8x19	2	Nitro Sapphire FF	42	50	16	4684,-	**OE-fit**	B,C,D

Forts. neste side »

Bilmerke - Bilmodell	Årsmodell	Dimensjon	Felgdim.	Bilde	Felgmodell	ET Felg	ET Bil	Avvik ET	Veil. Pris eks. MVA	Merknader	B,C D, M
VOLVO (forts.)				PCD: **5-108** Bolt - Mutter: **14x1,50B** CB: **63,4**							
			8x19	3	Nitro Turismo FF	50	50	0	4492,-	**OE-fit**	B,C,D
			8x19	4	Nitro Turismo FF G.Gun/Pol	50	50	0	4644,-	**OE-fit**	B,C,D
			8x19	10	Nitro Demon H.Slv	48	50	4	3624,-	**OE-fit**	B,D
			8x19	11	Nitro Demon	48	50	4	3376,-	**OE-fit**	B,D
			8x19	16	Advanti Inizio DST	42	50	16	4412,-	**OE-fit**	B,D
			8x19	48	Image Motion	50	50	0	2532,-	**OE-fit**	B,C,D
			8x19	49	Image Motion G.Gun	50	50	0	2532,-	**OE-fit**	B,C,D
			8,5x19	3	Nitro Turismo FF	45	50	10	4492,-	**OE-fit**	B,C,D
			8,5x19	4	Nitro Turismo FF G.Gun/Pol	45	50	10	4644,-	**OE-fit**	B,C,D
			8,5x19	5	Nitro Volcano G.Gun	45	50	10	4388,-	**OE-fit**	B,C,D
			8,5x19	6	Nitro Volcano	45	50	10	4632,-	**OE-fit**	B,C,D
			8,5x19	9	Nitro Sabre G.Blk	47	50	6	4292,-	**OE-fit**	B,D
			8,5x19	36	Image Colt	47	50	6	3028,-	**OE-fit**	B,D
			8,5x19	41	Image Thor	47	50	6	3048,-	**OE-fit**	B,C,D
			8,5x19	92	Image Colt L.Gun	47	50	6	2876,-	**OE-fit**	B,D
			9x19	12	Nitro Edge M.Blk	45	50	10	3884,-		B,M
			8x20	2	Nitro Sapphire FF	50	50	0	5096,-	**OE-fit**	B,C,D
			8x20	3	Nitro Turismo FF	45	50	10	4812,-	**OE-fit**	B,C,D
			8x20	4	Nitro Turismo FF G.Gun/Pol	45	50	10	4964,-	**OE-fit**	B,C,D
			8,5x20	1	Nitro Throne FF	40	50	20	5060,-	**OE-fit**	B,C,D,M
			8,5x20	2	Nitro Sapphire FF	47	50	6	5216,-	**OE-fit**	B,C,D
			8,5x20	3	Nitro Turismo FF	45	50	10	4812,-	**OE-fit**	B,C,D
			8,5x20	4	Nitro Turismo FF G.Gun/Pol	45	50	10	4964,-	**OE-fit**	B,C,D
			8,5x20	5	Nitro Volcano G.Gun	45	50	10	4824,-	**OE-fit**	B,C,D
			8,5x20	6	Nitro Volcano	45	50	10	5164,-	**OE-fit**	B,C,D
			8,5x20	7	Nitro Spark G.Blk/Grey	47	50	6	4660,-	**OE-fit**	B,D
			8,5x20	8	Nitro Spark G.Blk/Red	45	50	10	4660,-		B
			8,5x20	9	Nitro Sabre G.Blk	47	50	6	4800,-	**OE-fit**	B,D
			8,5x20	10	Nitro Demon H.Slv	45	50	10	4104,-	**OE-fit**	B,D
			8,5x20	11	Nitro Demon	45	50	10	3808,-	**OE-fit**	B,D
			8,5x20	36	Image Colt	47	50	6	3432,-	**OE-fit**	B,D
			8,5x20	92	Image Colt L.Gun	47	50	6	3276,-	**OE-fit**	B,D
			9x20	1	Nitro Throne FF	40	50	20	5060,-	**OE-fit**	B,C,D,M
			9x20	5	Nitro Volcano G.Gun	40	50	20	4824,-	**OE-fit**	B,C,D,M
			9x20	6	Nitro Volcano	40	50	20	5164,-	**OE-fit**	B,C,D,M
			9x20	12	Nitro Edge M.Blk	45	50	10	4220,-		B
			9x20	15	Nitro Magnum	45	50	10	4572,-	**OE-fit**	B,D
			9,5x20	5	Nitro Volcano G.Gun	40	50	20	4824,-	**OE-fit**, kun bak	B,C,D,M
			9,5x20	6	Nitro Volcano	40	50	20	5164,-	**OE-fit**, kun bak	B,C,D,M
			9x21	5	Nitro Volcano G.Gun	40	50	20	5540,-	**OE-fit**	B,C,D,M
			9x21	6	Nitro Volcano	40	50	20	5996,-	**OE-fit**	B,C,D,M
			9,5x21	5	Nitro Volcano G.Gun	40	50	20	5540,-	**OE-fit**, kun bak	B,C,D,M
			9,5x21	6	Nitro Volcano	40	50	20	5996,-	**OE-fit**, kun bak	B,C,D,M
			9x22	1	Nitro Throne FF	40	50	20	6276,-	**OE-fit**	B,C,D,M
			9x22	12	Nitro Edge M.Blk	45	50	10	4888,-		B
			9x22	15	Nitro Magnum	45	50	10	5420,-	**OE-fit**, kun XC60	B,D
VOLVO				PCD: **5-108** Bolt - Mutter: **14x1,50B** CB: **63,4**							
S60 (Z)	12.18-	17-21	6,5x16	36	Image Colt	40	46	11	1624,-		B
T5, T6, T8 18"			6,5x16	92	Image Colt L.Gun	40	46	11	1548,-		B
V60 (Z)	05.18-	16-21	7x16	17	BM Drive M.Gun	40	46	11	1476,-		B
D4 17"			7x16	47	Image Stella M.Blk	37	46	17	1548,-	**OE-fit**	B,C,D
T5, T6, T8 18"			7x16	48	Image Motion	40	46	11	1468,-		B,C
			7x16	49	Image Motion G.Gun	40	46	11	1468,-		B,C
			7x16	50	Image Legend	37	46	17	1544,-	**OE-fit**	B,D
			7x17	46	Image Stella	40	46	11	1812,-	**OE-fit**	B,C,D
			7x17	47	Image Stella M.Blk	40	46	11	1812,-	**OE-fit**	B,C,D
			7x17	48	Image Motion	40	46	11	1736,-	**OE-fit**	B,C,D
			7x17	49	Image Motion G.Gun	40	46	11	1736,-	**OE-fit**	B,C,D
			7,5x17	36	Image Colt	40	46	11	1956,-		B
			7,5x17	46	Image Stella	42	46	7	1812,-	**OE-fit**	B,C,D
			7,5x17	47	Image Stella M.Blk	42	46	7	1812,-	**OE-fit**	B,C,D
			7,5x17	50	Image Legend	45	46	1	1812,-	**OE-fit**	B,D
			7,5x17	92	Image Colt L.Gun	40	46	11	1876,-		B
			8x17	9	Nitro Sabre G.Blk	42	46	7	3108,-	**OE-fit**	B,D
			8x17	17	BM Drive M.Gun	42	46	7	1736,-	**OE-fit**	B,D
			8x17	22	ATS Evolution	42	46	7	2268,-	**OE-fit**	B,C,D
			8x17	23	ATS Evolution G.Grey	42	46	7	2340,-	**OE-fit**	B,C,D
			8x17	40	Image Spirit	42	46	7	1476,-	**OE-fit**	B,D
			8x18	2	Nitro Sapphire FF	42	46	7	4036,-	**OE-fit**	B,C,D
			8x18	7	Nitro Spark G.Blk/Grey	42	46	7	3476,-	**OE-fit**	B,D
			8x18	8	Nitro Spark G.Blk/Red	45	46	1	3476,-		B
			8x18	9	Nitro Sabre G.Blk	42	46	7	3496,-	**OE-fit**	B,D
			8x18	10	Nitro Demon H.Slv	40	46	11	2972,-	**OE-fit**	B,D
			8x18	11	Nitro Demon	40	46	11	2784,-	**OE-fit**	B,D
			8x18	16	Advanti Inizio DST	42	46	7	3828,-	**OE-fit**	B,D
			8x18	17	BM Drive M.Gun	42	46	7	2296,-	**OE-fit**	B,D
			8x18	22	ATS Evolution	42	46	7	3016,-	**OE-fit**	B,C,D
			8x18	23	ATS Evolution G.Grey	42	46	7	3116,-	**OE-fit**	B,C,D
			8x18	36	Image Colt	42	46	7	2412,-		B
			8x18	40	Image Spirit	42	46	7	1912,-	**OE-fit**	B,D
			8x18	41	Image Thor	42	46	7	2412,-	**OE-fit**	B,C,D
			8x18	46	Image Stella	42	46	7	2276,-	**OE-fit**	B,C,D
			8x18	47	Image Stella M.Blk	42	46	7	2276,-	**OE-fit**	B,C,D
			8x18	48	Image Motion	42	46	7	2204,-	**OE-fit**	B,C,D
			8x18	49	Image Motion G.Gun	42	46	7	2204,-	**OE-fit**	B,C,D
			8x18	50	Image Legend	42	46	7	2276,-	**OE-fit**	B,D

Forts. neste side »

Bilmerke - Bilmodell	Årsmodell	Dimensjon	Felgdim.	Bilde	Felgmodell	ET Felg	ET Bil	Avvik ET	Veil. Pris eks. MVA	Merknader	B,C D, M
VOLVO (forts.)			PCD: **5-108** Bolt - Mutter: **14x1,50B** CB: **63,4**								
			8x18	92	Image Colt L.Gun	42	46	7	2296,-		B
			8x19	2	Nitro Sapphire FF	42	46	7	4684,-	**OE-fit**	B,C,D
			8x19	3	Nitro Turismo FF	42	46	7	4492,-	**OE-fit**	B,C,D
			8x19	4	Nitro Turismo FF G.Gun/Pol	42	46	7	4644,-	**OE-fit**	B,C,D
			8x19	10	Nitro Demon H.Slv	40	46	11	3624,-	**OE-fit**	B,D
			8x19	11	Nitro Demon	40	46	11	3376,-	**OE-fit**	B,D
			8x19	16	Advanti Inizio DST	42	46	7	4412,-	**OE-fit**	B,D
			8x19	22	ATS Evolution	42	46	7	3892,-	**OE-fit**	B,C,D
			8x19	23	ATS Evolution G.Grey	42	46	7	4008,-	**OE-fit**	B,C,D
			8x19	48	Image Motion	42	46	7	2532,-	**OE-fit**	B,C,D
			8x19	49	Image Motion G.Gun	42	46	7	2532,-	**OE-fit**	B,C,D
			8,5x19	3	Nitro Turismo FF	45	46	1	4492,-	**OE-fit**	B,C,D
			8,5x19	4	Nitro Turismo FF G.Gun/Pol	45	46	1	4644,-	**OE-fit**	B,C,D
			8,5x19	5	Nitro Volcano G.Gun	45	46	1	4388,-	**OE-fit**	B,C,D
			8,5x19	6	Nitro Volcano	45	46	1	4632,-	**OE-fit**	B,C,D
			8,5x19	9	Nitro Sabre G.Blk	40	46	11	4292,-	**OE-fit**	B,D
			8,5x19	36	Image Colt	42	46	7	3028,-		B
			8,5x19	41	Image Thor	40	46	11	3048,-		B,C
			8,5x19	92	Image Colt L.Gun	42	46	7	2876,-		B
			8x20	2	Nitro Sapphire FF	45	46	1	5096,-	**OE-fit**	B,C,D
			8x20	3	Nitro Turismo FF	45	46	1	4812,-	**OE-fit**	B,C,D
			8x20	4	Nitro Turismo FF G.Gun/Pol	45	46	1	4964,-	**OE-fit**	B,C,D
			8,5x20	1	Nitro Throne FF	40	46	11	5060,-	**OE-fit**	B,C,D
			8,5x20	3	Nitro Turismo FF	45	46	1	4812,-	**OE-fit**	B,C,D
			8,5x20	4	Nitro Turismo FF G.Gun/Pol	45	46	1	4964,-	**OE-fit**	B,C,D
			8,5x20	5	Nitro Volcano G.Gun	45	46	1	4824,-	**OE-fit**	B,C,D
			8,5x20	6	Nitro Volcano	45	46	1	5164,-	**OE-fit**	B,C,D
			8,5x20	7	Nitro Spark G.Blk/Grey	42	46	7	4660,-	**OE-fit**	B,D
			8,5x20	8	Nitro Spark G.Blk/Red	45	46	1	4660,-		B
			8,5x20	9	Nitro Sabre G.Blk	40	46	11	4800,-	**OE-fit**	B,D
			8,5x20	10	Nitro Demon H.Slv	45	46	1	4104,-	**OE-fit**	B,D
			8,5x20	11	Nitro Demon	45	46	1	3808,-	**OE-fit**	B,D
			8,5x20	36	Image Colt	42	46	7	3432,-		B
			8,5x20	92	Image Colt L.Gun	42	46	7	3276,-		B
			9x21	5	Nitro Volcano G.Gun	45	46	1	5540,-	**OE-fit**	B,C,D,M
			9x21	6	Nitro Volcano	45	46	1	5996,-	**OE-fit**	B,C,D,M
VOLVO			PCD: **5-108** Bolt - Mutter: **14x1,50B** CB: **63,4**								
S60 (Z) Polestar engineered	09.19-	19-21	8x19	3	Nitro Turismo FF	42	46	7	4492,-	**OE-fit**	B,C,D
(guldlackade Polestar bremseok)			8x19	4	Nitro Turismo FF G.Gun/Pol	42	46	7	4644,-	**OE-fit**	B,C,D
V60 (Z) Polestar engineered	09.19-	19-21	8,5x19	3	Nitro Turismo FF	45	46	1	4492,-	**OE-fit**	B,C,D
(guldlackade Polestar bremseok)			8,5x19	4	Nitro Turismo FF G.Gun/Pol	45	46	1	4644,-	**OE-fit**	B,C,D
			8,5x19	9	Nitro Sabre G.Blk	40	46	11	4292,-	**OE-fit**	B,D
			8,5x20	3	Nitro Turismo FF	45	46	1	4812,-	**OE-fit**	B,C,D
			8,5x20	4	Nitro Turismo FF G.Gun/Pol	45	46	1	4964,-	**OE-fit**	B,C,D
			8,5x20	9	Nitro Sabre G.Blk	40	46	11	4800,-	**OE-fit**	B,D
VOLVO			PCD: **5-108** Bolt - Mutter: **14x1,50B** CB: **63,4**								
V60 (Z) Cross Country	11.18-	18-22	7,5x18	2	Nitro Sapphire FF	50	51	1	3944,-	**OE-fit**	B,C,D
			7,5x18	23	ATS Evolution G.Grey	50	51	1	3116,-	**OE-fit**	B,C,D
			7,5x18	46	Image Stella	50	51	1	2276,-	**OE-fit**	B,C,D
			7,5x18	47	Image Stella M.Blk	50	51	1	2276,-	**OE-fit**	B,C,D
			8x18	7	Nitro Spark G.Blk/Grey	47	51	7	3476,-	**OE-fit**	B,D
			8x18	8	Nitro Spark G.Blk/Red	45	51	11	3476,-		B
			8x18	9	Nitro Sabre G.Blk	47	51	7	3496,-	**OE-fit**	B,D
			8x18	10	Nitro Demon H.Slv	48	51	5	2972,-	**OE-fit**	B,D
			8x18	11	Nitro Demon	48	51	5	2784,-	**OE-fit**	B,D
			8x18	16	Advanti Inizio DST	42	51	17	3828,-	**OE-fit**	B,D,M
			8x18	17	BM Drive M.Gun	48	51	5	2296,-	**OE-fit**	B,D
			8x18	36	Image Colt	47	51	7	2412,-	**OE-fit**	B,D
			8x18	41	Image Thor	42	51	17	2412,-	**OE-fit**	B,C,D
			8x18	48	Image Motion	50	51	1	2204,-	**OE-fit**	B,C,D
			8x18	49	Image Motion G.Gun	50	51	1	2204,-	**OE-fit**	B,C,D
			8x18	50	Image Legend	50	51	1	2276,-	**OE-fit**	B,D
			8x18	92	Image Colt L.Gun	47	51	7	2296,-	**OE-fit**	B,D
			7,5x19	2	Nitro Sapphire FF	50	51	1	4572,-	**OE-fit**	B,C,D
			8x19	3	Nitro Turismo FF	50	51	1	4492,-	**OE-fit**	B,C,D
			8x19	4	Nitro Turismo FF G.Gun/Pol	50	51	1	4644,-	**OE-fit**	B,C,D
			8x19	10	Nitro Demon H.Slv	48	51	5	3624,-	**OE-fit**	B,D
			8x19	11	Nitro Demon	48	51	5	3376,-	**OE-fit**	B,D
			8x19	16	Advanti Inizio DST	42	51	17	4412,-	**OE-fit**	B,D,M
			8x19	48	Image Motion	50	51	1	2532,-	**OE-fit**	B,C,D
			8x19	49	Image Motion G.Gun	50	51	1	2532,-	**OE-fit**	B,C,D
			8,5x19	3	Nitro Turismo FF	45	51	11	4492,-	**OE-fit**	B,C,D
			8,5x19	4	Nitro Turismo FF G.Gun/Pol	45	51	11	4644,-	**OE-fit**	B,C,D
			8,5x19	5	Nitro Volcano G.Gun	45	51	11	4388,-	**OE-fit**	B,C,D
			8,5x19	6	Nitro Volcano	45	51	11	4632,-	**OE-fit**	B,C,D
			8,5x19	9	Nitro Sabre G.Blk	47	51	7	4292,-	**OE-fit**	B,D
			8,5x19	36	Image Colt	47	51	7	3028,-	**OE-fit**	B,D
			8,5x19	41	Image Thor	47	51	7	3048,-	**OE-fit**	B,C,D
			8,5x19	92	Image Colt L.Gun	47	51	7	2876,-	**OE-fit**	B,D
			8x20	2	Nitro Sapphire FF	50	51	1	5096,-	**OE-fit**	B,C,D
			8x20	3	Nitro Turismo FF	50	51	1	4812,-	**OE-fit**	B,C,D
			8x20	4	Nitro Turismo FF G.Gun/Pol	50	51	1	4964,-	**OE-fit**	B,C,D
			8,5x20	1	Nitro Throne FF	40	51	21	5060,-	**OE-fit**	B,C,D,M
			8,5x20	2	Nitro Sapphire FF	47	51	7	5216,-	**OE-fit**	B,C,D
			8,5x20	3	Nitro Turismo FF	45	51	11	4812,-	**OE-fit**	B,C,D
			8,5x20	4	Nitro Turismo FF G.Gun/Pol	45	51	11	4964,-	**OE-fit**	B,C,D

Forts. neste side »

Bilmerke - Bilmodell	Årsmodell	Dimensjon	Felgdim.	Bilde	Felgmodell	ET Felg	ET Bil	Avvik ET	Veil. Pris eks. MVA	Merknader	B,C D, M
VOLVO (forts.)				PCD: **5-108** Bolt - Mutter: **14x1,50B** CB: **63,4**							
			8,5x20	5	Nitro Volcano G.Gun	45	51	11	4824,-	**OE-fit**	B,C,D
			8,5x20	6	Nitro Volcano	45	51	11	5164,-	**OE-fit**	B,C,D
			8,5x20	7	Nitro Spark G.Blk/Grey	47	51	7	4660,-	**OE-fit**	B,D
			8,5x20	8	Nitro Spark G.Blk/Red	45	51	11	4660,-		B
			8,5x20	9	Nitro Sabre G.Blk	47	51	7	4800,-	**OE-fit**	B,D
			8,5x20	10	Nitro Demon H.Slv	45	51	11	4104,-	**OE-fit**	B,D
			8,5x20	11	Nitro Demon	45	51	11	3808,-	**OE-fit**	B,D
			8,5x20	36	Image Colt	47	51	7	3432,-	**OE-fit**	B,D
			8,5x20	92	Image Colt L.Gun	47	51	7	3276,-	**OE-fit**	B,D
			9x20	12	Nitro Edge M.Blk	45	51	11	4220,-		B,C,M
			9x20	15	Nitro Magnum	45	51	11	4572,-	**OE-fit**	B,C,D,M
			9x21	5	Nitro Volcano G.Gun	45	51	11	5540,-	**OE-fit**	B,C,D,M
			9x21	6	Nitro Volcano	45	51	11	5996,-	**OE-fit**	B,C,D,M
			9x22	12	Nitro Edge M.Blk	45	51	11	4888,-		B,C,M
			9x22	15	Nitro Magnum	45	51	11	5420,-	**OE-fit**	B,C,D,M
VOLVO				PCD: **5-108** Bolt - Mutter: **14x1,50B** CB: **63,4**							
S90 (P)	04.16-	17-22	7,5x17	46	Image Stella	42	48	11	1812,-	**OE-fit**	B,C,D
T5, T6 18"			7,5x17	47	Image Stella M.Blk	42	48	11	1812,-	**OE-fit**	B,C,D
Biler med luftfjæring 18"			7,5x17	50	Image Legend	45	48	5	1812,-	**OE-fit**	B,D
V90 (P)	06.16-	17-22	8x17	9	Nitro Sabre G.Blk	42	48	11	3108,-	**OE-fit**	B,D
T5, T6 18"			8x17	17	BM Drive M.Gun	42	48	11	1736,-	**OE-fit**	B,D
Biler med luftfjæring 18"			8x17	22	ATS Evolution	42	48	11	2268,-	**OE-fit**	B,C,D
			8x17	23	ATS Evolution G.Grey	42	48	11	2340,-	**OE-fit**	B,C,D
			8x17	40	Image Spirit	42	48	11	1476,-	**OE-fit**	B,D
			8x17	48	Image Motion	42	48	11	1736,-	**OE-fit**	B,C,D
			8x17	49	Image Motion G.Gun	42	48	11	1736,-	**OE-fit**	B,C,D
			8x18	2	Nitro Sapphire FF	42	48	11	4036,-	**OE-fit**	B,C,D
			8x18	7	Nitro Spark G.Blk/Grey	42	48	11	3476,-	**OE-fit**	B,D
			8x18	8	Nitro Spark G.Blk/Red	45	48	5	3476,-		B
			8x18	9	Nitro Sabre G.Blk	42	48	11	3496,-	**OE-fit**	B,D
			8x18	10	Nitro Demon H.Slv	40	48	15	2972,-	**OE-fit**	B,D
			8x18	11	Nitro Demon	40	48	15	2784,-	**OE-fit**	B,D
			8x18	16	Advanti Inizio DST	42	48	11	3828,-	**OE-fit**	B,D
			8x18	17	BM Drive M.Gun	42	48	11	2296,-	**OE-fit**	B,D
			8x18	22	ATS Evolution	42	48	11	3016,-	**OE-fit**	B,C,D
			8x18	23	ATS Evolution G.Grey	42	48	11	3116,-	**OE-fit**	B,C,D
			8x18	36	Image Colt	42	48	11	2412,-		B
			8x18	40	Image Spirit	42	48	11	1912,-	**OE-fit**	B,D
			8x18	41	Image Thor	42	48	11	2412,-	**OE-fit**	B,C,D
			8x18	46	Image Stella	42	48	11	2276,-	**OE-fit**	B,C,D
			8x18	47	Image Stella M.Blk	42	48	11	2276,-	**OE-fit**	B,C,D
			8x18	48	Image Motion	42	48	11	2204,-	**OE-fit**	B,C,D
			8x18	49	Image Motion G.Gun	42	48	11	2204,-	**OE-fit**	B,C,D
			8x18	50	Image Legend	42	48	11	2276,-	**OE-fit**	B,D
			8x18	92	Image Colt L.Gun	42	48	11	2296,-		B
			8x19	2	Nitro Sapphire FF	42	48	11	4684,-	**OE-fit**	B,C,D
			8x19	3	Nitro Turismo FF	42	48	11	4492,-	**OE-fit**	B,C,D
			8x19	4	Nitro Turismo FF G.Gun/Pol	42	48	11	4644,-	**OE-fit**	B,C,D
			8x19	10	Nitro Demon H.Slv	40	48	15	3624,-	**OE-fit**	B,D
			8x19	11	Nitro Demon	40	48	15	3376,-	**OE-fit**	B,D
			8x19	16	Advanti Inizio DST	42	48	11	4412,-	**OE-fit**	B,D
			8x19	22	ATS Evolution	42	48	11	3892,-	**OE-fit**	B,C,D
			8x19	23	ATS Evolution G.Grey	42	48	11	4008,-	**OE-fit**	B,C,D
			8x19	48	Image Motion	42	48	11	2532,-	**OE-fit**	B,C,D
			8x19	49	Image Motion G.Gun	42	48	11	2532,-	**OE-fit**	B,C,D
			8,5x19	3	Nitro Turismo FF	45	48	5	4492,-	**OE-fit**	B,C,D
			8,5x19	4	Nitro Turismo FF G.Gun/Pol	45	48	5	4644,-	**OE-fit**	B,C,D
			8,5x19	5	Nitro Volcano G.Gun	45	48	5	4388,-	**OE-fit**	B,C,D
			8,5x19	6	Nitro Volcano	45	48	5	4632,-	**OE-fit**	B,C,D
			8,5x19	9	Nitro Sabre G.Blk	40	48	15	4292,-	**OE-fit**	B,D
			8,5x19	36	Image Colt	42	48	11	3028,-		B
			8,5x19	41	Image Thor	40	48	15	3048,-		B,C
			8,5x19	92	Image Colt L.Gun	42	48	11	2876,-		B
			9x19	12	Nitro Edge M.Blk	45	48	5	3884,-		B
			8,5x20	1	Nitro Throne FF	40	48	15	5060,-	**OE-fit**	B,C,D
			8,5x20	2	Nitro Sapphire FF	47	48	1	5216,-	**OE-fit**	B,C,D
			8,5x20	3	Nitro Turismo FF	45	48	5	4812,-	**OE-fit**	B,C,D
			8,5x20	4	Nitro Turismo FF G.Gun/Pol	45	48	5	4964,-	**OE-fit**	B,C,D
			8,5x20	5	Nitro Volcano G.Gun	45	48	5	4824,-	**OE-fit**	B,C,D
			8,5x20	6	Nitro Volcano	45	48	5	5164,-	**OE-fit**	B,C,D
			8,5x20	7	Nitro Spark G.Blk/Grey	47	48	1	4660,-	**OE-fit**	B,D
			8,5x20	8	Nitro Spark G.Blk/Red	45	48	5	4660,-		B
			8,5x20	9	Nitro Sabre G.Blk	40	48	15	4800,-	**OE-fit**	B,D
			8,5x20	10	Nitro Demon H.Slv	45	48	5	4104,-	**OE-fit**	B,D
			8,5x20	11	Nitro Demon	45	48	5	3808,-	**OE-fit**	B,D
			8,5x20	36	Image Colt	42	48	11	3432,-		B
			8,5x20	92	Image Colt L.Gun	42	48	11	3276,-		B
			9x20	1	Nitro Throne FF	40	48	15	5060,-	**OE-fit**	B,C,D
			9x20	5	Nitro Volcano G.Gun	40	48	15	4824,-	**OE-fit**	B,C,D,M
			9x20	6	Nitro Volcano	40	48	15	5164,-	**OE-fit**	B,C,D,M
			9x20	12	Nitro Edge M.Blk	45	48	5	4220,-		B
			9x20	15	Nitro Magnum	45	48	5	4572,-	**OE-fit**	B,D
			9,5x20	5	Nitro Volcano G.Gun	40	48	15	4824,-	**OE-fit**, kun bak	B,C,D,M
			9,5x20	6	Nitro Volcano	40	48	15	5164,-	**OE-fit**, kun bak	B,C,D,M
			9x21	5	Nitro Volcano G.Gun	45	48	5	5540,-	**OE-fit**	B,C,D
			9x21	6	Nitro Volcano	45	48	5	5996,-	**OE-fit**	B,C,D

Forts. neste side »

Bilmerke - Bilmodell	Årsmodell	Dimensjon	Felgdim.	Bilde	Felgmodell	ET Felg	ET Bil	Avvik ET	Veil. Pris eks. MVA	Merknader	B,C D, M
VOLVO (forts.)			PCD: **5-108** Bolt - Mutter: **14x1,50B** CB: **63,4**								
			9,5x21	5	Nitro Volcano G.Gun	40	48	15	5540,-	**OE-fit**, kun bak	B,C,D,M
			9,5x21	6	Nitro Volcano	40	48	15	5996,-	**OE-fit**, kun bak	B,C,D,M
			9x22	1	Nitro Throne FF	40	48	15	6276,-	**OE-fit**	B,C,D
			9x22	12	Nitro Edge M.Blk	45	48	5	4888,-		B
			9x22	15	Nitro Magnum	45	48	5	5420,-	**OE-fit**	B,D
			9,5x22	1	Nitro Throne FF	42	48	11	6276,-	**OE-fit**	B,C,D,M
VOLVO			PCD: **5-108** Bolt - Mutter: **14x1,50B** CB: **63,4**								
V90 (P) Cross Country	10.16-	18-22	7,5x18	2	Nitro Sapphire FF	50	51	1	3944,-	**OE-fit**	B,C,D
			7,5x18	22	ATS Evolution	50	51	1	3016,-	**OE-fit**	B,C,D
			7,5x18	23	ATS Evolution G.Grey	50	51	1	3116,-	**OE-fit**	B,C,D
			7,5x18	46	Image Stella	50	51	1	2276,-	**OE-fit**	B,C,D
			7,5x18	47	Image Stella M.Blk	50	51	1	2276,-	**OE-fit**	B,C,D
			8x18	7	Nitro Spark G.Blk/Grey	47	51	7	3476,-	**OE-fit**	B,D
			8x18	8	Nitro Spark G.Blk/Red	45	51	11	3476,-		B
			8x18	9	Nitro Sabre G.Blk	47	51	7	3496,-	**OE-fit**	B,D
			8x18	10	Nitro Demon H.Slv	48	51	5	2972,-	**OE-fit**	B,D
			8x18	11	Nitro Demon	48	51	5	2784,-	**OE-fit**	B,D
			8x18	16	Advanti Inizio DST	42	51	17	3828,-	**OE-fit**	B,D
			8x18	17	BM Drive M.Gun	48	51	5	2296,-	**OE-fit**	B,D
			8x18	36	Image Colt	47	51	7	2412,-	**OE-fit**	B,D
			8x18	41	Image Thor	42	51	17	2412,-	**OE-fit**	B,C,D
			8x18	48	Image Motion	50	51	1	2204,-	**OE-fit**	B,C,D
			8x18	49	Image Motion G.Gun	50	51	1	2204,-	**OE-fit**	B,C,D
			8x18	50	Image Legend	50	51	1	2276,-	**OE-fit**	B,D
			8x18	92	Image Colt L.Gun	47	51	7	2296,-	**OE-fit**	B,D
			7,5x19	2	Nitro Sapphire FF	50	51	1	4572,-	**OE-fit**	B,C,D
			8x19	3	Nitro Turismo FF	50	51	1	4492,-	**OE-fit**	B,C,D
			8x19	4	Nitro Turismo FF G.Gun/Pol	50	51	1	4644,-	**OE-fit**	B,C,D
			8x19	10	Nitro Demon H.Slv	48	51	5	3624,-	**OE-fit**	B,D
			8x19	11	Nitro Demon	48	51	5	3376,-	**OE-fit**	B,D
			8x19	16	Advanti Inizio DST	42	51	17	4412,-	**OE-fit**	B,D
			8x19	48	Image Motion	50	51	1	2532,-	**OE-fit**	B,C,D
			8x19	49	Image Motion G.Gun	50	51	1	2532,-	**OE-fit**	B,C,D
			8,5x19	3	Nitro Turismo FF	45	51	11	4492,-	**OE-fit**	B,C,D
			8,5x19	4	Nitro Turismo FF G.Gun/Pol	45	51	11	4644,-	**OE-fit**	B,C,D
			8,5x19	5	Nitro Volcano G.Gun	45	51	11	4388,-	**OE-fit**	B,C,D
			8,5x19	6	Nitro Volcano	45	51	11	4632,-	**OE-fit**	B,C,D
			8,5x19	9	Nitro Sabre G.Blk	47	51	7	4292,-	**OE-fit**	B,D
			8,5x19	36	Image Colt	47	51	7	3028,-	**OE-fit**	B,D
			8,5x19	41	Image Thor	47	51	7	3048,-	**OE-fit**	B,C,D
			8,5x19	92	Image Colt L.Gun	47	51	7	2876,-	**OE-fit**	B,D
			9x19	12	Nitro Edge M.Blk	45	51	11	3884,-		B
			8x20	2	Nitro Sapphire FF	50	51	1	5096,-	**OE-fit**	B,C,D
			8x20	3	Nitro Turismo FF	50	51	1	4812,-	**OE-fit**	B,C,D
			8x20	4	Nitro Turismo FF G.Gun/Pol	50	51	1	4964,-	**OE-fit**	B,C,D
			8,5x20	1	Nitro Throne FF	40	51	21	5060,-	**OE-fit**	B,C,D,M
			8,5x20	2	Nitro Sapphire FF	47	51	7	5216,-	**OE-fit**	B,C,D
			8,5x20	3	Nitro Turismo FF	45	51	11	4812,-	**OE-fit**	B,C,D
			8,5x20	4	Nitro Turismo FF G.Gun/Pol	45	51	11	4964,-	**OE-fit**	B,C,D
			8,5x20	5	Nitro Volcano G.Gun	45	51	11	4824,-	**OE-fit**	B,C,D
			8,5x20	6	Nitro Volcano	45	51	11	5164,-	**OE-fit**	B,C,D
			8,5x20	7	Nitro Spark G.Blk/Grey	47	51	7	4660,-	**OE-fit**	B,D
			8,5x20	8	Nitro Spark G.Blk/Red	45	51	11	4660,-		B
			8,5x20	9	Nitro Sabre G.Blk	47	51	7	4800,-	**OE-fit**	B,D
			8,5x20	10	Nitro Demon H.Slv	45	51	11	4104,-	**OE-fit**	B,D
			8,5x20	11	Nitro Demon	45	51	11	3808,-	**OE-fit**	B,D
			8,5x20	36	Image Colt	47	51	7	3432,-	**OE-fit**	B,D
			8,5x20	92	Image Colt L.Gun	47	51	7	3276,-	**OE-fit**	B,D
			9x20	1	Nitro Throne FF	40	51	21	5060,-	**OE-fit**	B,C,D,M
			9x20	5	Nitro Volcano G.Gun	40	51	21	4824,-	**OE-fit**	B,C,D,M
			9x20	6	Nitro Volcano	40	51	21	5164,-	**OE-fit**	B,C,D,M
			9x20	12	Nitro Edge M.Blk	45	51	11	4220,-		B
			9x20	15	Nitro Magnum	45	51	11	4572,-		D
			9x21	5	Nitro Volcano G.Gun	45	51	11	5540,-	**OE-fit**	B,C,D
			9x21	6	Nitro Volcano	45	51	11	5996,-	**OE-fit**	B,C,D
			9x22	1	Nitro Throne FF	40	51	21	6276,-	**OE-fit**	B,C,D,M
			9x22	12	Nitro Edge M.Blk	45	51	11	4888,-		B
			9x22	15	Nitro Magnum	45	51	11	5420,-		D
			9,5x22	1	Nitro Throne FF	42	51	17	6276,-	**OE-fit**	B,C,D,M
VOLVO			PCD: **5-108** Bolt - Mutter: **14x1,50B** CB: **65,1**								
S60 R	01.03-05.10	17-20	8x18	11	Nitro Demon	40	46	12	2784,-		D
V70 R	01.03-09.07	17-20	8x19	11	Nitro Demon	40	46	12	3376,-		D
			8,5x20	2	Nitro Sapphire FF	47	46	-2	5216,-		B,C
			8,5x20	11	Nitro Demon	45	46	2	3808,-		D,M
VOLVO			PCD: **5-108** Bolt - Mutter: **14x1,50B** CB: **63,4**								
XC40 (X)	11.17-	17-22	7,5x17	9	Nitro Sabre G.Blk	45	51	11	3052,-	**OE-fit**	B,D
D4, T4, T5 18"			7,5x17	22	ATS Evolution	50	51	1	2268,-	**OE-fit**	B,C,D
			7,5x17	23	ATS Evolution G.Grey	50	51	1	2340,-	**OE-fit**	B,C,D
			7,5x17	36	Image Colt	47	51	7	1956,-	**OE-fit**	B,D
			7,5x17	46	Image Stella	50	51	1	1812,-	**OE-fit**	B,C,D
			7,5x17	47	Image Stella M.Blk	50	51	1	1812,-	**OE-fit**	B,C,D
			7,5x17	50	Image Legend	45	51	11	1812,-	**OE-fit**	B,D
			7,5x17	92	Image Colt L.Gun	47	51	7	1876,-	**OE-fit**	B,D
			8x17	17	BM Drive M.Gun	48	51	5	1736,-	**OE-fit**	B,C,D
			8x17	40	Image Spirit	42	51	17	1476,-	**OE-fit**	B,D

Forts. neste side »

Bilmerke - Bilmodell	Årsmodell	Dimensjon	Felgdim.	Bilde	Felgmodell	ET Felg	ET Bil	Avvik ET	Veil. Pris eks. MVA	Merknader	B,C D, M
VOLVO (forts.)				PCD: **5-108** Bolt - Mutter: **14x1,50B**	CB: **63,4**						
			8x17	48	Image Motion	50	51	1	1736,-	**OE-fit**	B,D
			8x17	49	Image Motion G.Gun	50	51	1	1736,-	**OE-fit**	B,C,D
			7,5x18	2	Nitro Sapphire FF	50	51	1	3944,-	**OE-fit**	B,C,D
			7,5x18	22	ATS Evolution	50	51	1	3016,-	**OE-fit**	B,C,D
			7,5x18	23	ATS Evolution G.Grey	50	51	1	3116,-	**OE-fit**	B,C,D
			7,5x18	46	Image Stella	50	51	1	2276,-	**OE-fit**	B,C,D
			7,5x18	47	Image Stella M.Blk	50	51	1	2276,-	**OE-fit**	B,C,D
			8x18	7	Nitro Spark G.Blk/Grey	47	51	7	3476,-	**OE-fit**	B,D
			8x18	8	Nitro Spark G.Blk/Red	45	51	11	3476,-		B
			8x18	9	Nitro Sabre G.Blk	47	51	7	3496,-	**OE-fit**	B,D
			8x18	10	Nitro Demon H.Slv	48	51	5	2972,-	**OE-fit**	B,D
			8x18	11	Nitro Demon	48	51	5	2784,-	**OE-fit**	B,D
			8x18	16	Advanti Inizio DST	42	51	17	3828,-	**OE-fit**	B,D
			8x18	17	BM Drive M.Gun	48	51	5	2296,-	**OE-fit**	B,D
			8x18	36	Image Colt	47	51	7	2412,-	**OE-fit**	B,D
			8x18	40	Image Spirit	42	51	17	1912,-	**OE-fit**	B,D
			8x18	41	Image Thor	42	51	17	2412,-	**OE-fit**	B,C,D
			8x18	46	Image Stella	42	51	17	2276,-	**OE-fit**	B,C,D
			8x18	47	Image Stella M.Blk	42	51	17	2276,-	**OE-fit**	B,C,D
			8x18	48	Image Motion	50	51	1	2204,-	**OE-fit**	B,C,D
			8x18	49	Image Motion G.Gun	50	51	1	2204,-	**OE-fit**	B,C,D
			8x18	50	Image Legend	50	51	1	2276,-	**OE-fit**	B,D
			8x18	92	Image Colt L.Gun	47	51	7	2296,-	**OE-fit**	B,D
			7,5x19	2	Nitro Sapphire FF	50	51	1	4572,-	**OE-fit**	B,C,D
			8x19	3	Nitro Turismo FF	50	51	1	4492,-	**OE-fit**	B,C,D
			8x19	4	Nitro Turismo FF G.Gun/Pol	50	51	1	4644,-	**OE-fit**	B,C,D
			8x19	10	Nitro Demon H.Slv	48	51	5	3624,-	**OE-fit**	B,D
			8x19	11	Nitro Demon	48	51	5	3376,-	**OE-fit**	B,D
			8x19	16	Advanti Inizio DST	42	51	17	4412,-	**OE-fit**	B,D
			8x19	22	ATS Evolution	42	51	17	3892,-	**OE-fit**	B,C,D
			8x19	23	ATS Evolution G.Grey	42	51	17	4008,-	**OE-fit**	B,C,D
			8x19	48	Image Motion	50	51	1	2532,-	**OE-fit**	B,C,D
			8x19	49	Image Motion G.Gun	50	51	1	2532,-	**OE-fit**	B,C,D
			8,5x19	3	Nitro Turismo FF	45	51	11	4492,-	**OE-fit**	B,C,D
			8,5x19	4	Nitro Turismo FF G.Gun/Pol	45	51	11	4644,-	**OE-fit**	B,C,D
			8,5x19	5	Nitro Volcano G.Gun	45	51	11	4388,-	**OE-fit**	B,C,D
			8,5x19	6	Nitro Volcano	45	51	11	4632,-	**OE-fit**	B,C,D
			8,5x19	9	Nitro Sabre G.Blk	47	51	7	4292,-	**OE-fit**	B,D
			8,5x19	36	Image Colt	47	51	7	3028,-	**OE-fit**	B,D
			8,5x19	41	Image Thor	47	51	7	3048,-	**OE-fit**	B,C,D
			8,5x19	92	Image Colt L.Gun	47	51	7	2876,-	**OE-fit**	B,D
			8x20	2	Nitro Sapphire FF	50	51	1	5096,-	**OE-fit**	B,C,D
			8x20	3	Nitro Turismo FF	50	51	1	4812,-	**OE-fit**	B,C,D
			8x20	4	Nitro Turismo FF G.Gun/Pol	50	51	1	4964,-	**OE-fit**	B,C,D
			8,5x20	1	Nitro Throne FF	40	51	21	5060,-	**OE-fit**	B,C,D
			8,5x20	2	Nitro Sapphire FF	47	51	7	5216,-	**OE-fit**	B,C,D
			8,5x20	3	Nitro Turismo FF	45	51	11	4812,-	**OE-fit**	B,C,D
			8,5x20	4	Nitro Turismo FF G.Gun/Pol	45	51	11	4964,-	**OE-fit**	B,C,D
			8,5x20	5	Nitro Volcano G.Gun	45	51	11	4824,-	**OE-fit**	B,C,D
			8,5x20	6	Nitro Volcano	45	51	11	5164,-	**OE-fit**	B,C,D
			8,5x20	7	Nitro Spark G.Blk/Grey	47	51	7	4660,-	**OE-fit**	B,D
			8,5x20	8	Nitro Spark G.Blk/Red	45	51	11	4660,-		B
			8,5x20	9	Nitro Sabre G.Blk	47	51	7	4800,-	**OE-fit**	B,D
			8,5x20	10	Nitro Demon H.Slv	45	51	11	4104,-	**OE-fit**	B,D
			8,5x20	11	Nitro Demon	45	51	11	3808,-	**OE-fit**	B,D
			8,5x20	36	Image Colt	47	51	7	3432,-	**OE-fit**	B,D
			8,5x20	92	Image Colt L.Gun	47	51	7	3276,-	**OE-fit**	B,D
			9x20	1	Nitro Throne FF	40	51	21	5060,-	**OE-fit**	B,C,D,M
			9x21	5	Nitro Volcano G.Gun	45	51	11	5540,-	**OE-fit**	B,C,D,M
			9x21	6	Nitro Volcano	45	51	11	5996,-	**OE-fit**	B,C,D,M
			9x22	1	Nitro Throne FF	40	51	21	6276,-	**OE-fit**	B,C,D,M
			9x22	12	Nitro Edge M.Blk	45	51	11	4888,-		B,M
			9x22	15	Nitro Magnum	45	51	11	5420,-	**OE-fit**	B,D,M
			9,5x22	1	Nitro Throne FF	42	51	17	6276,-	**OE-fit**	B,C,D,M
VOLVO				PCD: **5-108** Bolt - Mutter: **14x1,50B**	CB: **63,3**						
XC40 (X) Recharge	06.20-	19-20	7,5x19	2	Nitro Sapphire FF	50	51	1	4572,-	**OE-fit**	B,C,D
			8,5x19	2	Nitro Sapphire FF	56	59	5	4684,-	**OE-fit**, kun bak	B,C,D
			8x20	3	Nitro Turismo FF	50	51	1	4812,-	**OE-fit**	B,C,D
			8x20	4	Nitro Turismo FF G.Gun/Pol	50	51	1	4964,-	**OE-fit**	B,C,D
			9x20	3	Nitro Turismo FF	58	59	1	4960,-	**OE-fit**, kun bak	B,C,D
			9x20	4	Nitro Turismo FF G.Gun/Pol	58	59	1	5048,-	**OE-fit**, kun bak	B,C,D
VOLVO				PCD: **5-108** Bolt - Mutter: **14x1,50B**	CB: **63,3**						
XC60 (U)	05.17-	18-22	7,5x18	2	Nitro Sapphire FF	50	51	1	3944,-	**OE-fit**	B,C,D
T8 hybrid 19"			7,5x18	22	ATS Evolution	50	51	1	3016,-	**OE-fit**	B,C,D
			7,5x18	23	ATS Evolution G.Grey	50	51	1	3116,-	**OE-fit**	B,C,D
			7,5x18	46	Image Stella	50	51	1	2276,-	**OE-fit**	B,C,D
			7,5x18	47	Image Stella M.Blk	50	51	1	2276,-	**OE-fit**	B,C,D
			8x18	2	Nitro Sapphire FF	42	51	17	4036,-	**OE-fit**	B,C,D
			8x18	7	Nitro Spark G.Blk/Grey	47	51	7	3476,-	**OE-fit**	B,D
			8x18	8	Nitro Spark G.Blk/Red	45	51	11	3476,-		B
			8x18	9	Nitro Sabre G.Blk	47	51	7	3496,-	**OE-fit**	B,D
			8x18	10	Nitro Demon H.Slv	48	51	5	2972,-		D
			8x18	11	Nitro Demon	48	51	5	2784,-		D
			8x18	16	Advanti Inizio DST	42	51	17	3828,-	**OE-fit**	B,D
			8x18	17	BM Drive M.Gun	48	51	5	2296,-		D
			8x18	36	Image Colt	47	51	7	2412,-	**OE-fit**	B,D

Forts. neste side »

Bilmerke - Bilmodell	Årsmodell	Dimensjon	Felgdim.	Bilde	Felgmodell	ET Felg	ET Bil	Avvik ET	Veil. Pris eks. MVA	Merknader	B,C D, M
VOLVO (forts.)			PCD: **5-108** Bolt - Mutter: **14x1,50B** CB: **63,3**								
			8x18	40	Image Spirit	42	51	17	1912,-	**OE-fit**	B,D
			8x18	41	Image Thor	42	51	17	2412,-	**OE-fit**	B,C,D
			8x18	46	Image Stella	42	51	17	2276,-	**OE-fit**	B,C,D
			8x18	47	Image Stella M.Blk	42	51	17	2276,-	**OE-fit**	B,C,D
			8x18	48	Image Motion	50	51	1	2204,-	**OE-fit**	B,C,D
			8x18	49	Image Motion G.Gun	50	51	1	2204,-	**OE-fit**	B,C,D
			8x18	50	Image Legend	50	51	1	2276,-	**OE-fit**	B,D
			8x18	92	Image Colt L.Gun	47	51	7	2296,-	**OE-fit**	B,D
			7,5x19	2	Nitro Sapphire FF	50	51	1	4572,-	**OE-fit**	B,C,D
			8x19	2	Nitro Sapphire FF	42	51	17	4684,-	**OE-fit**	B,C,D
			8x19	3	Nitro Turismo FF	50	51	1	4492,-	**OE-fit**	B,C,D
			8x19	4	Nitro Turismo FF G.Gun/Pol	50	51	1	4644,-	**OE-fit**	B,C,D
			8x19	10	Nitro Demon H.Slv	48	51	5	3624,-		D
			8x19	11	Nitro Demon	48	51	5	3376,-		D
			8x19	16	Advanti Inizio DST	42	51	17	4412,-	**OE-fit**	B,D
			8x19	22	ATS Evolution	42	51	17	3892,-	**OE-fit**	B,C,D
			8x19	23	ATS Evolution G.Grey	42	51	17	4008,-	**OE-fit**	B,C,D
			8x19	48	Image Motion	50	51	1	2532,-	**OE-fit**	B,C,D
			8x19	49	Image Motion G.Gun	50	51	1	2532,-	**OE-fit**	B,C,D
			8,5x19	3	Nitro Turismo FF	45	51	11	4492,-	**OE-fit**	B,C,D
			8,5x19	4	Nitro Turismo FF G.Gun/Pol	45	51	11	4644,-	**OE-fit**	B,C,D
			8,5x19	5	Nitro Volcano G.Gun	45	51	11	4388,-	**OE-fit**	B,C,D
			8,5x19	6	Nitro Volcano	45	51	11	4632,-	**OE-fit**	B,C,D
			8,5x19	9	Nitro Sabre G.Blk	47	51	7	4292,-	**OE-fit**	B,D
			8,5x19	36	Image Colt	47	51	7	3028,-	**OE-fit**	B,D
			8,5x19	41	Image Thor	47	51	7	3048,-	**OE-fit**	B,C,D
			8,5x19	92	Image Colt L.Gun	47	51	7	2876,-	**OE-fit**	B,D
			9x19	12	Nitro Edge M.Blk	45	51	11	3884,-		
			8x20	2	Nitro Sapphire FF	50	51	1	5096,-	**OE-fit**	B,C,D
			8x20	3	Nitro Turismo FF	50	51	1	4812,-	**OE-fit**	B,C,D
			8x20	4	Nitro Turismo FF G.Gun/Pol	50	51	1	4964,-	**OE-fit**	B,C,D
			8,5x20	1	Nitro Throne FF	40	51	21	5060,-	**OE-fit**	B,C,D
			8,5x20	3	Nitro Turismo FF	45	51	11	4812,-	**OE-fit**	B,C,D
			8,5x20	4	Nitro Turismo FF G.Gun/Pol	45	51	11	4964,-	**OE-fit**	B,C,D
			8,5x20	5	Nitro Volcano G.Gun	45	51	11	4824,-	**OE-fit**	B,C,D
			8,5x20	6	Nitro Volcano	45	51	11	5164,-	**OE-fit**	B,C,D
			8,5x20	7	Nitro Spark G.Blk/Grey	47	51	7	4660,-	**OE-fit**	B,D
			8,5x20	8	Nitro Spark G.Blk/Red	45	51	11	4660,-		B
			8,5x20	9	Nitro Sabre G.Blk	47	51	7	4800,-	**OE-fit**	B,D
			8,5x20	10	Nitro Demon H.Slv	45	51	11	4104,-		D
			8,5x20	11	Nitro Demon	45	51	11	3808,-		D
			8,5x20	36	Image Colt	47	51	7	3432,-	**OE-fit**	B,D
			8,5x20	92	Image Colt L.Gun	47	51	7	3276,-	**OE-fit**	B,D
			9x20	1	Nitro Throne FF	40	51	21	5060,-	**OE-fit**	B,C,D
			9x20	12	Nitro Edge M.Blk	45	51	11	4220,-		
			9x20	15	Nitro Magnum	45	51	11	4572,-		D
			9x21	5	Nitro Volcano G.Gun	45	51	11	5540,-	**OE-fit**	B,C,D
			9x21	6	Nitro Volcano	45	51	11	5996,-	**OE-fit**	B,C,D
			9x22	1	Nitro Throne FF	40	51	21	6276,-	**OE-fit**	B,C,D
			9x22	12	Nitro Edge M.Blk	45	51	11	4888,-		
			9x22	15	Nitro Magnum	45	51	11	5420,-		D
			9,5x22	1	Nitro Throne FF	42	51	17	6276,-	**OE-fit**	B,C,D,M
VOLVO			PCD: **5-108** Bolt - Mutter: **14x1,50B** CB: **67,1**								
XC90 (C)	10.02-12.14	17-22	8,5x19	41	Image Thor	40	49	18	3048,-	**OE-fit**	B,C,D
(Vissa äldre D5 og T5			9x19	12	Nitro Edge M.Blk	45	49	8	3884,-		D,M
med 5-säten kan ha 16")			9x20	12	Nitro Edge M.Blk	45	49	8	4220,-		D,M
			9x22	12	Nitro Edge M.Blk	45	49	8	4888,-		D,M
VOLVO			PCD: **5-108** Bolt - Mutter: **14x1,50B** CB: **63,4**								
XC90 (L)	01.15-	18-22	8x18	7	Nitro Spark G.Blk/Grey	42	42	0	3476,-	**OE-fit**	B,D
T8 19"			8x18	9	Nitro Sabre G.Blk	42	42	0	3496,-	**OE-fit**	B,D
			8x18	10	Nitro Demon H.Slv	40	42	4	2972,-	**OE-fit**	B,D
			8x18	11	Nitro Demon	40	42	4	2784,-	**OE-fit**	B,D
			8x18	16	Advanti Inizio DST	42	42	0	3828,-	**OE-fit**	B,D
			8x18	17	BM Drive M.Gun	42	42	0	2296,-	**OE-fit**	B,D
			8x18	22	ATS Evolution	42	42	0	3016,-	**OE-fit**	B,C,D
			8x18	23	ATS Evolution G.Grey	42	42	0	3116,-	**OE-fit**	B,C,D
			8x18	36	Image Colt	42	42	0	2412,-		B
			8x18	40	Image Spirit	42	42	0	1912,-	**OE-fit**	B,D
			8x18	41	Image Thor	42	42	0	2412,-	**OE-fit**	B,C,D
			8x18	46	Image Stella	42	42	0	2276,-	**OE-fit**	B,C,D
			8x18	47	Image Stella M.Blk	42	42	0	2276,-	**OE-fit**	B,C,D
			8x18	48	Image Motion	42	42	0	2204,-	**OE-fit**	B,C,D
			8x18	49	Image Motion G.Gun	42	42	0	2204,-	**OE-fit**	B,C,D
			8x18	50	Image Legend	42	42	0	2276,-	**OE-fit**	B,D
			8x18	92	Image Colt L.Gun	42	42	0	2296,-		B
			8x19	3	Nitro Turismo FF	42	42	0	4492,-	**OE-fit**	B,C,D
			8x19	4	Nitro Turismo FF G.Gun/Pol	42	42	0	4644,-	**OE-fit**	B,C,D
			8x19	10	Nitro Demon H.Slv	40	42	4	3624,-	**OE-fit**	B,D
			8x19	11	Nitro Demon	40	42	4	3376,-	**OE-fit**	B,D
			8x19	16	Advanti Inizio DST	42	42	0	4412,-	**OE-fit**	B,D
			8x19	22	ATS Evolution	42	42	0	3892,-	**OE-fit**	B,C,D
			8x19	23	ATS Evolution G.Grey	42	42	0	4008,-	**OE-fit**	B,C,D
			8x19	48	Image Motion	42	42	0	2532,-	**OE-fit**	B,C,D
			8x19	49	Image Motion G.Gun	42	42	0	2532,-	**OE-fit**	B,C,D
			8,5x19	5	Nitro Volcano G.Gun	40	42	4	4388,-	**OE-fit**	B,C,D
			8,5x19	6	Nitro Volcano	40	42	4	4632,-	**OE-fit**	B,C,D

Forts. neste side »

Bilmerke - Bilmodell	Årsmodell	Dimensjon	Felgdim.	Bilde	Felgmodell	ET Felg	ET Bil	Avvik ET	Veil. Pris eks. MVA	Merknader	B,C D, M
VOLVO (forts.)				PCD: **5-108** Bolt - Mutter: **14x1,50B**		CB: **63,4**					
			8,5x19	9	Nitro Sabre G.Blk	40	42	4	4292,-	**OE-fit**	B,D
			8,5x19	36	Image Colt	42	42	0	3028,-		B
			8,5x19	41	Image Thor	40	42	4	3048,-		B,C
			8,5x19	92	Image Colt L.Gun	42	42	0	2876,-		B
			9x19	12	Nitro Edge M.Blk	38	42	8	3884,-	**OE-fit**	B,D
			8,5x20	1	Nitro Throne FF	40	42	4	5060,-	**OE-fit**	B,C,D
			8,5x20	7	Nitro Spark G.Blk/Grey	42	42	0	4660,-	**OE-fit**	B,D
			8,5x20	9	Nitro Sabre G.Blk	40	42	4	4800,-	**OE-fit**	B,D
			8,5x20	10	Nitro Demon H.Slv	38	42	8	4104,-	**OE-fit**	B,D
			8,5x20	11	Nitro Demon	38	42	8	3808,-	**OE-fit**	B,D
			8,5x20	36	Image Colt	42	42	0	3432,-		B
			8,5x20	92	Image Colt L.Gun	42	42	0	3276,-		B
			9x20	1	Nitro Throne FF	40	42	4	5060,-	**OE-fit**	B,C,D
			9x20	5	Nitro Volcano G.Gun	40	42	4	4824,-	**OE-fit**	B,C,D
			9x20	6	Nitro Volcano	40	42	4	5164,-	**OE-fit**	B,C,D
			9x20	12	Nitro Edge M.Blk	38	42	8	4220,-	**OE-fit**	B,D
			9x20	15	Nitro Magnum	38	42	8	4572,-	**OE-fit**	B,D
			9,5x20	5	Nitro Volcano G.Gun	40	42	4	4824,-	**OE-fit**	B,C,D,M
			9,5x20	6	Nitro Volcano	40	42	4	5164,-	**OE-fit**	B,C,D,M
			9x21	5	Nitro Volcano G.Gun	40	42	4	5540,-	**OE-fit**	B,C,D
			9x21	6	Nitro Volcano	40	42	4	5996,-	**OE-fit**	B,C,D
			9,5x21	5	Nitro Volcano G.Gun	40	42	4	5540,-	**OE-fit**	B,C,D,M
			9,5x21	6	Nitro Volcano	40	42	4	5996,-	**OE-fit**	B,C,D,M
			9x22	1	Nitro Throne FF	40	42	4	6276,-	**OE-fit**	B,C,D
			9x22	12	Nitro Edge M.Blk	38	42	8	4888,-	**OE-fit**	B,D
			9x22	15	Nitro Magnum	38	42	8	5420,-	**OE-fit**	B,D
			9,5x22	1	Nitro Throne FF	42	42	0	6276,-	**OE-fit**	B,C,D
			10,5x22	15	Nitro Magnum	40	42	4	5420,-	**OE-fit**, kun bak	B,D,M
VOLVO				PCD: **5-108** Bolt - Mutter: **12x1,75B**		CB: **65,1**					
850	09.93-01.97	15-20	6x15	17	BM Drive M.Gun	40	43	6	1276,-		D
960	09.94-01.97	15-20	6x15	48	Image Motion	40	43	6	1224,-	**OE-fit**	B,C,D
C70 cab	01.98-04.06	16-20	6x15	49	Image Motion G.Gun	40	43	6	1224,-	**OE-fit**	B,C,D
C70 coupe	01.98-04.06	16-20	6,5x16	36	Image Colt	40	43	6	1624,-	**OE-fit**	B,D
S70	02.97-02.00	15-19	6,5x16	92	Image Colt L.Gun	40	43	6	1548,-	**OE-fit**	B,D
T5R 16"			7x16	17	BM Drive M.Gun	40	43	6	1476,-		D
S90	02.97-09.98	15-20	7x16	40	Image Spirit	40	43	6	1264,-		D
V90			7x16	46	Image Stella	40	43	6	1548,-	**OE-fit**	B,C,D
(mutter 12x1.50)			7x16	47	Image Stella M.Blk	40	43	6	1548,-	**OE-fit**	B,C,D
V70	02.97-02.00	15-19	7x16	48	Image Motion	40	43	6	1468,-	**OE-fit**	B,C,D
T5R 16"			7x16	49	Image Motion G.Gun	40	43	6	1468,-	**OE-fit**	B,C,D
			7x16	50	Image Legend	40	43	6	1544,-	**OE-fit**	B,D
			7x17	40	Image Spirit	42	43	2	1476,-		D
			7x17	46	Image Stella	42	43	2	1812,-	**OE-fit**	B,C,D
			7x17	47	Image Stella M.Blk	42	43	2	1812,-	**OE-fit**	B,C,D
			7,5x17	36	Image Colt	40	43	6	1956,-		D
			7,5x17	50	Image Legend	40	43	6	1812,-	**OE-fit**	B,D
			7,5x17	92	Image Colt L.Gun	40	43	6	1876,-		D
			8x18	11	Nitro Demon	40	43	6	2784,-		D
			8x18	36	Image Colt	42	43	2	2412,-	**OE-fit**	B,D
			8x18	53	Nitro Hammer	42	43	2	3256,-		D
			8x18	92	Image Colt L.Gun	42	43	2	2296,-		D
			8x19	11	Nitro Demon	40	43	6	3376,-		D
VOLVO				PCD: **5-108** Bolt - Mutter: **12x1,50**		CB: **65,1**					
740	09.84-04.92	14-18	6,5x15	42	Image Brio	20	25	10	1304,-		D
760											
780											
745	09.86-04.92	14-18									
940	10.90-09.98	15-20									
960	10.90-08.94	15-20									
VOLVO				PCD: **5-108** Bolt - Mutter: **1/2"**		CB: **65,1**					
140	08.67-08.74	15-17	6,5x15	42	Image Brio	20	25	10	1304,-		D
160											
240	08.74-09.93	14-18									
260											
TRAILER				PCD: **4-100** Bolt - Mutter: **12x1,50B**		CB: **57,1**					
Caravan 4-bolt	-	13-15	5x13	44	Image Ride HL M.Gun	30	30	0	1592,-		D
Trailer 4-bolt	-	13-15	5x13	45	Image Ride HL	30	30	0	1592,-	Maks bel. 750 kg	D
			5,5x14	37	Image Comet	30	30	0	1264,-	Maks bel. 570 kg	D
			5,5x14	38	Image Comet Slv	30	30	0	1264,-	Maks bel. 570 kg	D
			5,5x14	44	Image Ride HL M.Gun	30	30	0	1716,-		D
			5,5x14	45	Image Ride HL	30	30	0	1716,-	Maks bel. 750 kg	D
			6x15	44	Image Ride HL M.Gun	30	30	0	2032,-		D
			6x15	45	Image Ride HL	30	30	0	2032,-	Maks bel. 750 kg	D
TRAILER				PCD: **5-112** Bolt - Mutter: **12x1,50B**		CB: **66,6**					
Caravan 5-bolt	-	13-16	5x13	44	Image Ride HL M.Gun	30	30	0	1592,-		D
Trailer 5-bolt	-	13-16	5x13	45	Image Ride HL	30	30	0	1592,-	Maks bel. 1000 kg	
			5,5x14	44	Image Ride HL M.Gun	30	30	0	1716,-		D
			5,5x14	45	Image Ride HL	30	30	0	1716,-	Maks bel. 1000 kg	
			6x15	44	Image Ride HL M.Gun	30	30	0	2032,-		D
			6x15	45	Image Ride HL	30	30	0	2032,-	Maks bel. 1000 kg	

Slik måler du

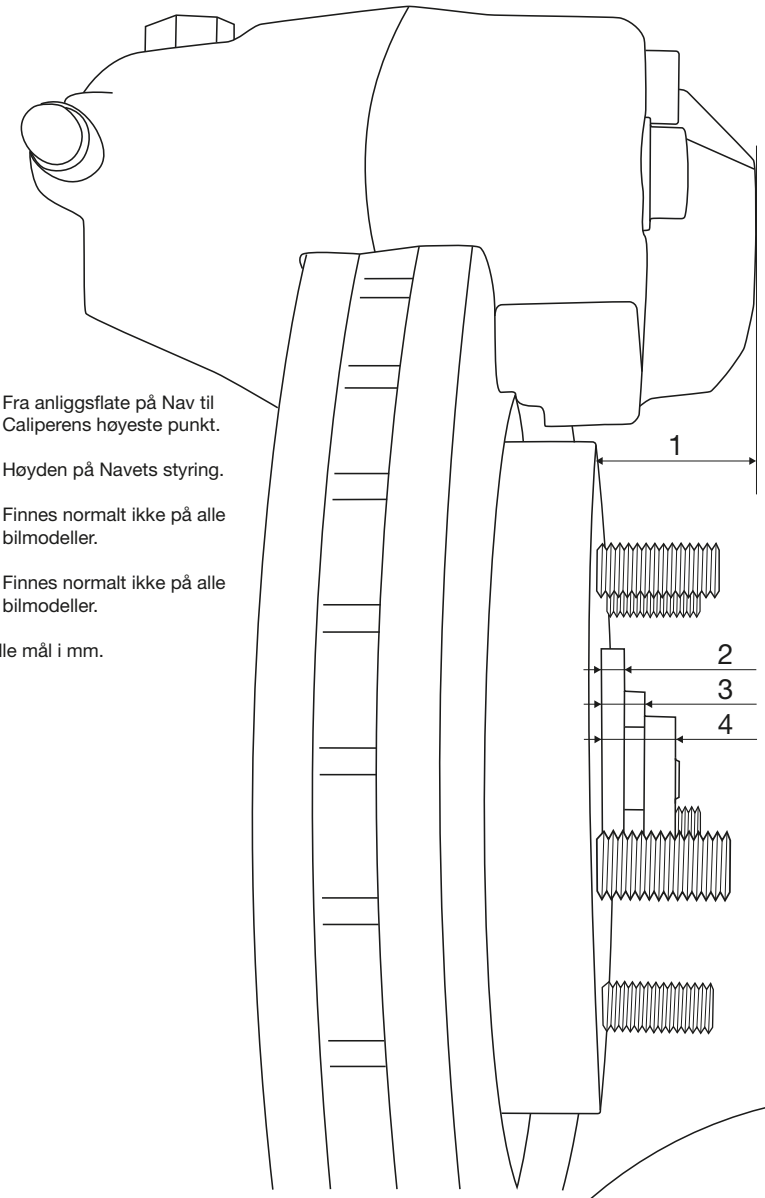

1: Fra anliggsflate på Nav til Caliperens høyeste punkt.

2: Høyden på Navets styring.

3: Finnes normalt ikke på alle bilmodeller.

4: Finnes normalt ikke på alle bilmodeller.

Alle mål i mm.

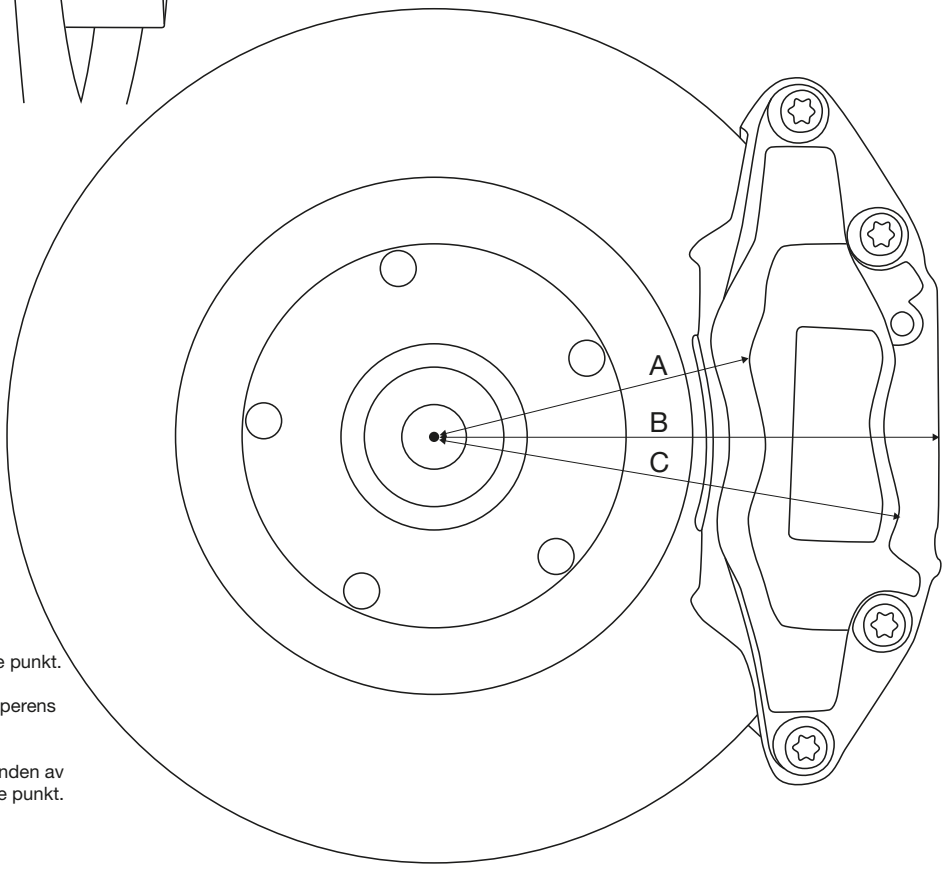

A: Fra Navsenter til begynnelsen på Caliperens høyeste punkt.

B: Fra Navsenter Caliperens ytterste punkt.

C: Fra Navsenter til enden av Caliperens høyeste punkt.

Alle mål i mm.

Bilmerke - Bilmodell	Årsmodell	Felgdim.	**Veil. Pris eks. MVA**	Varenummer	KpZ Varenummer	Alt nr	PCD	ET	CB	Bolt - Mutter	Merknader
Alfa Romeo											
Giulietta (940)	04.10-	7x16	**700,-**	0170604	AR516007	8227	5-110	41	65,1	12x1,25B	
166 -	10.98-11.07	6,5x16	**684,-**	0165602	AR516002	8485	5-108	36	58,1	12x1,25B	2
Audi											
Q2 (GA)	07.16-	6,5x16	**860,-**	5065617	VO516039	6665	5-112	43	57,1	14x1,50B	
A4 (B8) sedan	11.07-10.15	7x16	**912,-**	0370604	AD516014	9537	5-112	39	66,6	14x1,50B	R
A4 (B8) avant	05.08-10.15	7x16	**912,-**	0370604	AD516014	9537	5-112	39	66,6	14x1,50B	R
A4 (8E) sedan Facelift	11.04-10.07	7x16	**888,-**	0370602	AD516011	9885	5-112	42	57,1	14x1,50B	Ikke biler over 120kW
A4 (8E) sedan 1.8 Turbo (120/140kW) 16" 2.4 2.5TDI, 3.0 16"	12.00-10.04	7x16	**888,-**	0370602	AD516011	9885	5-112	42	57,1	14x1,50B	R
A4 (8E) avant Facelift	11.04-04.08	7x16	**888,-**	0370602	AD516011	9885	5-112	42	57,1	14x1,50B	Ikke biler over 120kW
A4 (8E) avant 1.8 Turbo (120/140kW) 16" 2.4 2.5TDI, 3.0 16"	12.00-10.04	7x16	**888,-**	0370602	AD516011	9885	5-112	42	57,1	14x1,50B	R
A3 (8V) sportback	01.13- 01.13-	6x16 6,5x16	**836,-** **776,-**	5060604 5065614	VO516034 VO516035	8247 8667	5-112 5-112	48 46	57,1 57,1	14x1,50B 14x1,50B	R R
A3 (8V)	08.12- 08.12-	6x16 6,5x16	**836,-** **776,-**	5060604 5065614	VO516034 VO516035	8247 8667	5-112 5-112	48 46	57,1 57,1	14x1,50B 14x1,50B	R R
A3 (8P) sportback Kun 1.6TDI (77kW) fr.om. 07.10- kan ha 15"	09.04-07.12 09.04-07.12	6x16 6,5x16	**820,-** **804,-**	0360603 5065603	AD516012 VO516015	9535 9915	5-112 5-112	50 50	57,1 57,1	14x1,50B 14x1,50B	R R
A3 (8P) cab	01.08-11.13 01.08-11.13	6x16 6,5x16	**820,-** **804,-**	0360603 5065603	AD516012 VO516015	9535 9915	5-112 5-112	50 50	57,1 57,1	14x1,50B 14x1,50B	R R
A3 (8P) Kun 1.6TDI (77kW) fr.o.m. 07.10- kan ha 15"	05.03-07.12 05.03-07.12	6x16 6,5x16	**820,-** **804,-**	0360603 5065603	AD516012 VO516015	9535 9915	5-112 5-112	50 50	57,1 57,1	14x1,50B 14x1,50B	R R
A3 (8L)	09.96-04.03 09.96-04.03	6x15 6,5x16	**740,-** **992,-**	5060506 5065601	VO515011 VO516005	8380 9680	5-100 5-100	38 42	57,1 57,1	14x1,50B 14x1,50B	R R
A1 (GB) 40 TFSI (147kW) 16"	10.18-	5,5x15	**672,-**	5055501	VO515032	4055	5-100	40	57,1	14x1,50B	
A1 (8X) sportback	03.12-09.18	6,5x15	**836,-**	0365502	AD515016		5-100	34	57,1	14x1,50B	R
A1 (8X) 1.4TFSI (136kW) 16"	06.10-09.18 06.10-09.18	6x15 6,5x15	**748,-** **836,-**	0360504 0365502	AD515015 AD515016	7415	5-100 5-100	29 34	57,1 57,1	14x1,50B 14x1,50B	R R
BMW											
X1 (E84)	09.09-08.15	7,5x17	**1168,-**	0575701	BM517005	9863	5-120	34	72,5	12x1,50B	
3-Series (F31) touring 328i, 330d, 330i 17" 335i, 335d, 340i 17"	08.12-07.19	7x16	**1004,-**	0570610	BM516027	8007	5-120	31	72,5	14x1,25B	
3-Series (F30) sedan 328i, 330d, 330i, 335i, 335d, 340i 17"	10.11-01.19	7x16	**1004,-**	0570610	BM516027	8007	5-120	31	72,5	14x1,25B	
2-Series (F46) gran tourer 220d, 220i 17"	02.15- 02.15-	7x16 7x16	**948,-** **948,-**	0570611 0570612	BM516028 BM516029	7501 7502	5-112 5-112	52 47	66,5 66,5	14x1,25B 14x1,25B	2
2-Series (F45) active tourer 225i, 225xe 17"	09.14- 09.14-	7x16 7x16	**948,-** **948,-**	0570611 0570612	BM516028 BM516029	7501 7502	5-112 5-112	52 47	66,5 66,5	14x1,25B 14x1,25B	2
2-Series (F23) cab 225d, 228i 17", M235i 18"	01.14-	7x16	**932,-**	0570609	BM516026		5-120	40	72,5	14x1,25B	
2-Series (F22) coupe 225d, 225i, 228i 17", M235i 18"	10.13-10.19	7x16	**932,-**	0570609	BM516026		5-120	40	72,5	14x1,25B	
1-Series (F21) 3-door 125d, 125i 17" M135i, M140i 18"	08.12- 08.12-	6,5x16 7x16	**932,-** **932,-**	0565605 0570609	BM516025 BM516026	9244	5-120 5-120	33 40	72,5 72,5	14x1,25B 14x1,25B	
1-Series (F20) 5-door 125d, 125i 17" M135i, M140i 18"	10.11-08.19 10.11-08.19	6,5x16 7x16	**932,-** **932,-**	0565605 0570609	BM516025 BM516026	9244	5-120 5-120	33 40	72,5 72,5	14x1,25B 14x1,25B	
1-Series (E88) cab 123d, 125i, 135i 17"	03.08-02.15	7x16	**932,-**	0570606	BM516019	9577	5-120	44	72,5	12x1,50B	Med H2+ hump
1-Series (E87) 123d, 130i 17"	09.04-09.11	7x16	**932,-**	0570606	BM516019	9577	5-120	44	72,5	12x1,50B	Med H2+ hump
1-Series (E82) coupe 123d, 125i, 135i 17"	11.07-02.14	7x16	**932,-**	0570606	BM516019	9577	5-120	44	72,5	12x1,50B	Med H2+ hump
Chevrolet											
Trax (KL1B)	11.12-12.15	6,5x16	**808,-**	3465608	OP516015	9272	5-105	38	56,6	12x1,50	
Spark (KL1M)	01.10-12.15	4,5x14	**640,-**	0845401	CV514001	4925	4-100	43	56,5	12x1,50	2
Orlando (KL1Y)	02.11-12.15	6,5x16	**824,-**	3465607	OP516014	9327	5-115	41	70,3	12x1,50	
Cruze (KL1J) sw 1.7D, 2.0D, (bultcirkel 5-115)	06.12-12.15	6,5x16	**824,-**	3465607	OP516014	9327	5-115	41	70,3	12x1,50	
Cruze (KL1J) sw 1.4 Turbo, 1.6, 1.8 (bultcirkel 5-105)	06.12-12.15	6,5x16	**824,-**	3465606	OP516013	9247	5-105	39	56,6	12x1,50	
Cruze (KL1J) 1.7D, 2.0D (bultcirkel 5-115)	05.09-12.15	6,5x16	**824,-**	3465607	OP516014	9327	5-115	41	70,3	12x1,50	
Cruze (KL1J) 1.4 Turbo, 1.6, 1.8 (bultcirkel 5-105)	05.09-12.15 05.09-12.15	6x15 6,5x16	**732,-** **824,-**	0860502 3465606	CV515002 OP516013	7710 9247	5-105 5-105	39 39	56,6 56,6	12x1,50 12x1,50	
Captiva -	09.06-12.15	6,5x16	**384,-**	3465604	OP516011	7885	5-115	46	70,1	12x1,50	
Aveo (KL1T) 5-bult 1.3TD (71kW) & 1.6 är 5-bult	08.11-12.15	6x15	**732,-**	0860502	CV515002	7710	5-105	39	56,6	12x1,50	
Citroen											
Xsara Picasso	02.00-09.06	6x15	**748,-**	3560501	PS515039	8475	4-108	18	65,1	12x1,25B	
Spacetourer (V)	06.16- 06.16-	7x16 7x16	**1008,-** **1008,-**	3570607 3570608	PS616003 R1-1980	7505 PS616003	5-108 5-108	46 46	65,1 65,1	12x1,25B 12x1,25B	
Nemo (A) kombi	07.08-	6x15	**884,-**	1460509	FL515013	7680	4-98	44	58,1	12x1,25B	
Nemo (225)	01.08- 01.08-	5,5x14 6x15	**696,-** **884,-**	1455409 1460509	FL614004 FL515013	6805 7680	4-98 4-98	44 44	58,1 58,1	12x1,25B 12x1,25B	
Jumpy II 2.0HDi 16"	01.06-05.16 01.06-05.16	7x16 7x16	**1016,-** **1060,-**	3570609 3570602	R1-1675 PS616001	PS616001 7780	5-108 5-108	42 42	65,1 65,1	12x1,25B 12x1,25B	
Jumpy (V)	06.16- 06.16-	7x16 7x16	**1008,-** **1008,-**	3570607 3570608	PS616003 R1-1980	7505 PS616003	5-108 5-108	46 46	65,1 65,1	12x1,25B 12x1,25B	
Jumper (small chassis)	06.06- 06.06-	6x15 6x16	**896,-** **1344,-**	1460515 1460612	FL615007 R1-1909	8877 FL616008	5-118 5-118	68 68	71,1 71,1	14x1,50B 14x1,50B	
Jumper (small chassis)	03.94-05.06	6x15	**896,-**	1460515	FL615007	8877	5-118	68	71,1	14x1,50B	2
Jumper (large chassis)	06.06- 06.06-	6x16 6x16	**1304,-** **1304,-**	1460611 1460610	R1-1910 FL616009	FL616009	5-130 5-130	68 68	78,1 78,1	16x1,50B 16x1,50B	
Jumper (large chassis)	03.94-05.06 03.94-05.06	6x16 6x16	**1304,-** **1304,-**	1460610 1460611	FL616009 R1-1910	FL616009	5-130 5-130	68 68	78,1 78,1	16x1,50B 16x1,50B	2
											Forts. neste side »

Bilmerke - Bilmodell	Årsmodell	Felgdim.	Veil. Pris eks. MVA	Varenummer	KpZ Varenummer	Alt nr	PCD	ET	CB	Bolt - Mutter	Merknader
Citroen (forts.)											
DS4 (N) 1.6 Turbo (147kW) 17"	06.11-	7x16	**948,-**	1070602	PS516016	9337	4-108	32	65,1	12x1,25B	
DS3 (S) 1.6 Turbo (115kW) 16", Racing (152kW) 17"	03.10-	6x15	**720,-**	3560504	PS515045	8055	4-108	23	65,1	12x1,25B	
C-Zero - (Navhål 54.1 bak)	11.10- 11.10-	4x15 5x15	**640,-** **640,-**	1040501 1050501	PS515049 PS515050	7160 7235	4-100 4-100	35 35	56,1 54,1	12x1,50 12x1,50	 Kun bak
C6 (T)	11.05-12.12	7x17	**1208,-**	1070701	PS517002	8255	5-108	32	65,1	12x1,25B	
C5 II	10.04-03.08	6,5x16	**896,-**	1065603	PS516012	7860	4-108	26	65,1	12x1,25B	
C5 (R) 2.2HDi, 2.7HDi, 3.0i 17", 3.0HDi (177kW) 18"	01.08-	7x17	**1208,-**	1070701	PS517002	8255	5-108	32	65,1	12x1,25B	
C4 (U) Picasso 2.0i, HDi 110, HDi 135 16"	10.06-05.13	6,5x16	**896,-**	1065603	PS516012	7860	4-108	26	65,1	12x1,25B	
C4 (U) Grand Picasso 2.0i, HDi 110, HDi 135 16"	11.06-08.13	6,5x16	**896,-**	1065603	PS516012	7860	4-108	26	65,1	12x1,25B	
C4 (N)	02.11- 02.11-	6,5x15 7x16	**748,-** **948,-**	3565507 1070602	PS515048 PS516016	7815 9337	4-108 4-108	27 32	65,1 65,1	12x1,25B 12x1,25B	
C4 (B) Aircross	04.12-	6,5x16	**684,-**	1065604	PS516020	9657	5-114,3	38	67,1	12x1,50	2
C4 (3) Space Tourer 2.0HDi (120kW) 17"	01.18-	6,5x16	**576,-**	1065605	PS516022		5-108	47	65,1	12x1,25B	
C4 (3) Picasso 2,0HDi 17"	06.13-12.17	6,5x16	**576,-**	1065605	PS516022		5-108	47	65,1	12x1,25B	
C4 (3) Grand Space Tourer 2.0HDi 17"	01.18-	6,5x16	**576,-**	1065605	PS516022		5-108	47	65,1	12x1,25B	
C4 (3) Grand Picasso 2,0HDi 17"	09.13-12.17	6,5x16	**576,-**	1065605	PS516022		5-108	47	65,1	12x1,25B	
C4 (0) cactus 1.2 (96kW) 16"	09.14- 09.14-	6,5x15 6,5x15	**904,-** **900,-**	3565508 3565510	PS515052 R1-1889	7385 PS515052	4-108 4-108	20 20	65,1 65,1	12x1,25B 12x1,25B	
C4 - 2.0i, HDi 110, HDi 135 16"	10.04-01.11	6x15	**720,-**	3560502	PS515037	8690	4-108	27	65,1	12x1,25B	
C3 (SH) Picasso 1.6HDi (68kW), 1.6 (88kW) 16"	05.09-08.17	6x15	**720,-**	3560504	PS515045	8055	4-108	23	65,1	12x1,25B	
C3 (S)	11.16- 11.16-	6,5x15 6,5x15	**904,-** **900,-**	3565508 3565510	PS515052 R1-1889	7385 PS515052	4-108 4-108	20 20	65,1 65,1	12x1,25B 12x1,25B	
C3 (S)	02.10-10.16	6x15	**720,-**	3560504	PS515045	8055	4-108	23	65,1	12x1,25B	
C3 (H) Pluriel	06.03-02.10	6x15	**720,-**	3560502	PS515037	8690	4-108	27	65,1	12x1,25B	
C3 (2) Aircross 1.2 (81kW/96kW) 16" 1.6HDi 16"	09.17- 09.17-	6,5x15 6,5x15	**904,-** **900,-**	3565508 3565510	PS515052 R1-1889	7385 PS515052	4-108 4-108	20 20	65,1 65,1	12x1,25B 12x1,25B	
C3 - 1.6, 1.6HDi (80kW) 15"	04.02-01.10 04.02-01.10	5,5x14 6x15	**616,-** **720,-**	1055403 3560502	PS514022 PS515037	6215 8690	4-108 4-108	24 27	65,1 65,1	12x1,25B 12x1,25B	
C2 -	11.03-03.10 11.03-03.10	5,5x14 6x15	**616,-** **720,-**	1055403 3560502	PS514022 PS515037	6215 8690	4-108 4-108	24 27	65,1 65,1	12x1,25B 12x1,25B	
C1 (P)	07.14-	4,5x14	**744,-**	4945402	T0514021	5770	4-100	35	54,1	12x1,50B	
C1 (P)	07.05-06.14	4,5x14	**632,-**	4945401	T0514017	4940	4-100	39	54,1	12x1,50B	
Berlingo First	05.08-12.09	6x15	**748,-**	3560501	PS515039	8475	4-108	18	65,1	12x1,25B	
Berlingo (E) 1.2, 1.5HDI (75, 81, 96kW) 16"	06.18- 06.18-	6,5x15 6,5x16	**884,-** **896,-**	3565511 3565604	PS615004 PS616004		5-108 5-108	42 47	65,1 65,1	12x1,25B 12x1,25B	
Berlingo (7)	05.08-05.18 05.08-05.18	6,5x15 6,5x16	**836,-** **896,-**	3565506 1065603	PS615003 PS516012	8477 7860	4-108 4-108	27 26	65,1 65,1	12x1,25B 12x1,25B	
Berlingo - 1.6i (80kW) 03.03- 15" 2.0HDi (66kW) 03.03- 15"	09.96-04.08 09.96-04.08	5,5x14 6x15	**676,-** **748,-**	1055402 3560501	PS614002 PS515039	6395 8475	4-108 4-108	24 18	65,1 65,1	12x1,25B 12x1,25B	
Dacia											
Sandero (SD) Stepway	01.13-	6x15	**860,-**	4060506	RE515027	7777	4-100	40	60,1	12x1,50B	
Sandero (SD) Stepway	09.09-12.12	6x15	**836,-**	4060504	RE515021	7965	4-100	50	60,1	12x1,50B	
Sandero (SD)	01.13-	6x15	**860,-**	4060506	RE515027	7777	4-100	40	60,1	12x1,50B	
Sandero -	06.08-12.12	6x15	**836,-**	4060504	RE515021	7965	4-100	50	60,1	12x1,50B	
Logan pick-up	01.07-	6x15	**836,-**	4060504	RE515021	7965	4-100	50	60,1	12x1,50B	
Logan MCV	08.13-	6x15	**996,-**	4060511	RE515031	8932	4-100	40	60,0	12x1,50B	
Logan MCV	06.05-07.13	6x15	**836,-**	4060504	RE515021	7965	4-100	50	60,1	12x1,50B	
Lodgy (SD)	04.12-	6x15	**1096,-**	4060513	R1-1845	RE515029	4-100	40	60,1	12x1,50B	
Duster (SR)	01.18-	6,5x16	**948,-**	4065608	RE516018	8873	5-114,3	50	66,1	12x1,50B	
Duster (SD)	04.10-12.17	6,5x16	**948,-**	4065608	RE516018	8873	5-114,3	50	66,1	12x1,50B	
Dokker (SD)	04.13-	6x15	**1096,-**	4060513	R1-1845	RE515029	4-100	40	60,1	12x1,50B	
Fiat											
Tipo (356)	01.16-	6,5x16	**720,-**	1465605	FL516009	7105	5-98	39	58,1	12x1,25B	
Talento -	08.16- 08.16-	6x16 6x16	**1200,-** **1200,-**	4060604 4060605	RE616016 R1-1896	7503 RE616016	5-114,3 5-114,3	50 50	66,1 66,1	14x1,50B 14x1,50B	
Seidici -	04.06-08.14	6x15	**708,-**	4860501	SU515002	7150	5-114,3	50	60,1	12x1,50B	
Scudo (270) 2.0HDi 16"	10.06-04.16 10.06-04.16	7x16 7x16	**1060,-** **1016,-**	3570602 3570609	PS616001 R1-1675	7780 PS616001	5-108 5-108	42 42	65,1 65,1	12x1,25B 12x1,25B	
Scudo -	05.16- 05.16-	6x16 6x16	**1200,-** **1200,-**	4060605 4060604	R1-1896 RE616016	RE616016 7503	5-114,3 5-114,3	50 50	66,1 66,1	14x1,50B 14x1,50B	
Qubo (225)	01.10-	6x15	**884,-**	1460509	FL515013	7680	4-98	44	58,1	12x1,25B	
Punto (199) Evo Abarth, Abarth Essese 17"	11.09-	6x15	**720,-**	1460505	FL515010	7915	4-100	43	56,5	12x1,50B	
Punto -	09.99-01.07	5,5x14	**676,-**	1455403	FL514018	6165	4-98	35	58,1	12x1,25B	
Panda 4x4	09.03-02.12	5,5x14	**676,-**	1455403	FL514018	6165	4-98	35	58,1	12x1,25B	
Panda (312)	03.12-	5,5x14	**632,-**	1455408	FL514026	6315	4-98	35	58,1	12x1,25B	
Panda -	09.03-02.12	5,5x14	**676,-**	1455403	FL514018	6165	4-98	35	58,1	12x1,25B	
Linea -	07.07-10.15	6x15	**884,-**	1460509	FL515013	7680	4-98	44	58,1	12x1,25B	
Grande Punto -	10.05-10.09	6x15	**720,-**	1460505	FL515010	7915	4-100	43	56,5	12x1,50B	
Fiorino (225) 1.3JTD (70kW) 15" 1.4 Naturalpower (57kW) 15"	02.08- 02.08-	5,5x14 6x15	**696,-** **884,-**	1455409 1460509	FL614004 FL515013	6805 7680	4-98 4-98	44 44	58,1 58,1	12x1,25B 12x1,25B	
Ducato (small chassis)	06.06-08.14 06.06-08.14	6x15 6x16	**896,-** **1344,-**	1460515 1460612	FL615007 R1-1909	8877 FL616008	5-118 5-118	68 68	71,1 71,1	14x1,50B 14x1,50B	
											Forts. neste side »

Bilmerke - Bilmodell	Årsmodell	Felgdim.	**Veil. Pris eks. MVA**	Varenummer	KpZ Varenummer	Alt nr	PCD	ET	CB	Bolt - Mutter	Merknader
Fiat (forts.)											
Ducato (small chassis)	03.94-05.06	6x15	**896,-**	1460515	FL615007	8877	5-118	68	71,1	14x1,50B	2
Ducato (light chassis)	09.14- 09.14-	6x15 6x16	**896,-** **1344,-**	1460515 1460612	FL615007 R1-1909	8877 FL616008	5-118 5-118	68 68	71,1 71,1	14x1,50B 14x1,50B	
Ducato (large chassis) Maxi	06.06-08.14 06.06-08.14	6x16 6x16	**1304,-** **1304,-**	1460610 1460611	FL616009 R1-1910	 FL616009	5-130 5-130	68 68	78,1 78,1	16x1,50B 16x1,50B	
Ducato (large chassis) Maxi	03.94-05.06 03.94-05.06	6x16 6x16	**1304,-** **1304,-**	1460611 1460610	R1-1910 FL616009	FL616009 	5-130 5-130	68 68	78,1 78,1	16x1,50B 16x1,50B	 2
Ducato (heavy chassis) Maxi	09.14- 09.14-	6x16 6x16	**1304,-** **1304,-**	1460610 1460611	FL616009 R1-1910	 FL616009	5-130 5-130	68 68	78,1 78,1	16x1,50B 16x1,50B	
Doblo (263) Maxi (långa hjulbasen)	02.10-	6x16	**868,-**	1460609	FL616007		5-98	36	58,1	12x1,25B	
Doblo (263) 1.4, 2.0D 16"	02.10- 02.10-	6x15 6x16	**916,-** **868,-**	1460510 1460609	FL615006 FL616007	7395 	5-98 5-98	39 36	58,1 58,1	12x1,25B 12x1,25B	
500 X 2.0 17"	09.14-	6,5x16	**884,-**	1465604	FL516008	8887	5-110	40	65,1	12x1,25B	
500 (312) Abarth, Abarth Essesse 16"	01.07-	5,5x14	**632,-**	1455408	FL514026	6315	4-98	35	58,1	12x1,25B	
500 (199) L trekking 1.4, 1.6D 16"	06.13-	6x16	**868,-**	1460609	FL616007		5-98	36	58,1	12x1,25B	
Ford											
Transit rwd 2.2TDCi, 2.3i, 2.4TDCi	06.06-12.12	5,5x16	**1136,-**	1555601	F0616006	9597	5-160	56	65,1	14x2	
Transit fwd 2.2TDCi	06.06-12.12	5,5x15	**1088,-**	1555502	F0615005	8505	5-160	60	65,1	14x2	
Transit FT260/280/300	01.01-05.06	5,5x15	**1088,-**	1555502	F0615005	8505	5-160	60	65,1	14x2	
Transit Custom 3.3t, 3.5t	01.13- 01.13-	6,5x16 6,5x16	**1104,-** **1104,-**	1565608 1565606	R1-1864 F0616009	F0616009 9118	5-160 5-160	60 60	65,1 65,1	14x1,50 14x1,50	
Transit Custom 2.7t, 2.9t, 3.1t	01.13- 01.13- 01.13- 01.13-	6,5x15 6,5x15 6,5x16 6,5x16	**1024,-** **1024,-** **1104,-** **1104,-**	1565501 1565502 1565608 1565606	F0615009 R1-1863 R1-1864 F0616009	8337 F0615009 F0616009 9118	5-160 5-160 5-160 5-160	60 60 60 60	65,1 65,1 65,1 65,1	14x1,50 14x1,50 14x1,50 14x1,50	
Transit Connect	05.18-	6,5x16	**1320,-**	1565613	R1-2047	F0616012	5-108	50	63,3	14x1,50	
Transit Connect	07.13-04.18 07.13-04.18	6,5x16 6,5x16	**1056,-** **1056,-**	1565607 1565609	F0616010 R1-1886	9232 F0616010	5-108 5-108	50 50	63,3 63,3	12x1,50 12x1,50	
Transit Connect	01.03-06.13	6x15	**956,-**	1560510	F0615006	8525	5-108	52	63,3	12x1,50	
Transit 3.3t, 3.5t	03.14- 03.14-	6,5x16 6,5x16	**1104,-** **1104,-**	1565608 1565606	R1-1864 F0616009	F0616009 9118	5-160 5-160	60 60	65,1 65,1	14x1,50 14x1,50	
Transit 2.9t, 3.1t	03.14- 03.14- 03.14- 03.14-	6,5x15 6,5x15 6,5x16 6,5x16	**1024,-** **1024,-** **1104,-** **1104,-**	1565501 1565502 1565606 1565608	F0615009 R1-1863 F0616009 R1-1864	8337 F0615009 9118 F0616009	5-160 5-160 5-160 5-160	60 60 60 60	65,1 65,1 65,1 65,1	14x1,50 14x1,50 14x1,50 14x1,50	
Transit 2.3i, 2.4TDCi (Dobbelmontage)	06.06-02.14	5x16	**1780,-**	1550603	R1-1646	F0616007	6-180	107	138,8		
Transit 2.0D	10.02-05.06	5,5x16	**1136,-**	1555601	F0616006	9597	5-160	56	65,1	14x2	
Transit (JN8) Courier	04.14-	6x15	**988,-**	1560518	R1-1925	F0615010	4-108	37	63,3	12x1,50	
Transit - (Dobbelmontage)	05.14- 05.14-	6x16 6x16	**1444,-** **1236,-**	1560603 1560602	R1-1924 F0616011	F0616011 9197	6-180 6-180	109 109	138,8 138,8		
Tourneo Custom 3.3t, 3.5t	01.13- 01.13-	6,5x16 6,5x16	**1104,-** **1104,-**	1565606 1565608	F0616009 R1-1864	9118 F0616009	5-160 5-160	60 60	65,1 65,1	14x1,50 14x1,50	
Tourneo Custom 2.7t, 2.9t, 3.1t	01.13- 01.13-	6,5x15 6,5x15	**1024,-** **1024,-**	1565501 1565502	F0615009 R1-1863	8337 F0615009	5-160 5-160	60 60	65,1 65,1	14x1,50 14x1,50	
Tourneo Connect	05.18-	6,5x16	**1320,-**	1565613	R1-2047	F0616012	5-108	50	63,3	14x1,50	
Tourneo Connect	07.13-04.18 07.13-04.18	6,5x16 6,5x16	**1056,-** **1056,-**	1565609 1565607	R1-1886 F0616010	F0616010 9232	5-108 5-108	50 50	63,3 63,3	12x1,50 12x1,50	
Tourneo (JU2) Courier	04.14-	6x15	**988,-**	1560518	R1-1925	F0615010	4-108	37	63,3	12x1,50	
S-Max (WA6)	07.15-	7,5x17	**764,-**	1575701	F0517004		5-108	55	63,3	14x1,50	
S-Max (WA6)	06.06-06.15	6,5x16	**1180,-**	1565604	F0516007	8465	5-108	50	63,3	14x1,50	
Puma -	09.97-12.01	6x15	**436,-**	1560501	F0515006	8440	4-108	34	63,3	12x1,50	2
Mondeo turnier (Facelift)	07.03-06.07	6,5x16	**860,-**	1565603	F0516005	9975	5-108	52	63,3	12x1,50	
Mondeo sedan (Facelift)	07.03-06.07	6,5x16	**860,-**	1565603	F0516005	9975	5-108	52	63,3	12x1,50	
Mondeo (BA7)	10.14- 10.14-	6,5x16 6,5x16	**764,-** **764,-**	1565614 1565605	9122358 F0516008	F0516008 8325	5-108 5-108	50 50	63,3 63,3	12x1,50 12x1,50	
Mondeo (BA7)	06.07-09.14 06.07-09.14	6,5x16 6,5x16	**764,-** **764,-**	1565605 1565614	F0516008 9122358	8325 F0516008	5-108 5-108	50 50	63,3 63,3	12x1,50 12x1,50	
Kuga (DM2) (Facelift)	10.15-01.20	7,5x17	**800,-**	1575702	F0517005	9937	5-108	53	63,3	12x1,50	
Kuga (DM2)	01.13-09.15 01.13-09.15 01.13-09.15	6,5x16 6,5x16 7,5x17	**1056,-** **1056,-** **800,-**	1565609 1565607 1575702	R1-1886 F0616010 F0517005	F0616010 9232 9937	5-108 5-108 5-108	50 50 53	63,3 63,3 63,3	12x1,50 12x1,50 12x1,50	
Kuga (DM2)	06.08-12.12 06.08-12.12	6,5x16 6,5x16	**764,-** **764,-**	1565605 1565614	F0516008 9122358	8325 F0516008	5-108 5-108	50 50	63,3 63,3	12x1,50 12x1,50	
KA (RU8)	01.09-10.16	5,5x14	**632,-**	1455408	FL514026	6315	4-98	35	58,1	12x1,25B	
Grand C-Max (DXA)	10.10- 10.10-	6,5x16 6,5x16	**764,-** **764,-**	1565605 1565614	F0516008 9122358	8325 F0516008	5-108 5-108	50 50	63,3 63,3	12x1,50 12x1,50	
Galaxy (WA6)	07.15-	7,5x17	**764,-**	1575701	F0517004		5-108	55	63,3	14x1,50	
Galaxy (WA6)	07.06-06.15	6,5x16	**1180,-**	1565604	F0516007	8465	5-108	50	63,3	14x1,50	
Fusion (JU2)	10.02-06.12 10.02-06.12	5,5x14 6x15	**640,-** **748,-**	1555407 1560506	F0514010 F0515007	6275 8200	4-108 4-108	47 52	63,3 63,3	12x1,50 12x1,50	
Focus (DYB) (Även ST)	03.11-05.18 03.11-05.18	6,5x16 6,5x16	**764,-** **764,-**	1565614 1565605	9122358 F0516008	F0516008 8325	5-108 5-108	50 50	63,3 63,3	12x1,50 12x1,50	
Focus (DEH)	06.18- 06.18-	6,5x16 6,5x16	**764,-** **764,-**	1565614 1565605	9122358 F0516008	F0516008 8325	5-108 5-108	50 50	63,3 63,3	12x1,50 12x1,50	

Forts. neste side »

Bilmerke - Bilmodell	Årsmodell	Felgdim.	Veil. Pris eks. MVA	Varenummer	KpZ Varenummer	Alt nr	PCD	ET	CB	Bolt - Mutter	Merknader
Ford (forts.)											
Focus (DA3) turnier 1.8TDCi 2.0TDCi 16"	12.04-02.11	6x15	**969,-**	1560509	F0515014	8795	5-108	52	63,3	12x1,50	
2.0i ST220 16"	12.04-02.11	6,5x16	**860,-**	1565603	F0516005	9975	5-108	52	63,3	12x1,50	
	12.04-02.11	6,5x16	**764,-**	1565605	F0516008	8325	5-108	50	63,3	12x1,50	
	12.04-02.11	6,5x16	**764,-**	1565614	9122358	F0516008	5-108	50	63,3	12x1,50	
Focus (DA3) cab	05.07-07.10	6,5x16	**764,-**	1565614	9122358	F0516008	5-108	50	63,3	12x1,50	
	05.07-07.10	6,5x16	**764,-**	1565605	F0516008	8325	5-108	50	63,3	12x1,50	
	05.07-07.10	6,5x16	**860,-**	1565603	F0516005	9975	5-108	52	63,3	12x1,50	
Focus (DA3) 1.8TDCi 2.0TDCi 16"	12.04-02.11	6x15	**969,-**	1560509	F0515014	8795	5-108	52	63,3	12x1,50	
2.0i ST220 16"	12.04-02.11	6,5x16	**860,-**	1565603	F0516005	9975	5-108	52	63,3	12x1,50	
	12.04-02.11	6,5x16	**764,-**	1565605	F0516008	8325	5-108	50	63,3	12x1,50	
	12.04-02.11	6,5x16	**764,-**	1565614	9122358	F0516008	5-108	50	63,3	12x1,50	
Focus -	10.98-11.04	6x15	**748,-**	1560506	F0515007	8200	4-108	52	63,3	12x1,50	
Fiesta Van	05.10-12.17	5,5x14	**632,-**	1555408	F0514011	6355	4-108	37	63,3	12x1,50	
	05.10-12.17	6x15	**772,-**	1560511	F0515015	7255	4-108	47	63,3	12x1,50	
Fiesta Van	08.07-04.10	5,5x14	**640,-**	1555407	F0514010	6275	4-108	47	63,3	12x1,50	
	08.07-04.10	6x15	**748,-**	1560506	F0515007	8200	4-108	52	63,3	12x1,50	
Fiesta (JHH)	09.17-	6x15	**704,-**	1560517	F0515021	4095	4-108	45	63,3	12x1,50	
	09.17-	6,5x16	**940,-**	1565612	F0516011	7095	4-108	47	63,3	12x1,50	
Fiesta (JA8) S 1.6 (100kW) 16"	10.08-08.17	5,5x14	**632,-**	1555408	F0514011	6355	4-108	37	63,3	12x1,50	
ST (134kW) 16"	10.08-08.17	6x15	**772,-**	1560511	F0515015	7255	4-108	47	63,3	12x1,50	
Fiesta - ST150, ST170 15"	04.02-09.08	5,5x14	**640,-**	1555407	F0514010	6275	4-108	47	63,3	12x1,50	
	04.02-09.08	6x15	**748,-**	1560506	F0515007	8200	4-108	52	63,3	12x1,50	
C-Max (DXA)	10.10-03.19	6,5x16	**764,-**	1565614	9122358	F0516008	5-108	50	63,3	12x1,50	
	10.10-03.19	6,5x16	**764,-**	1565605	F0516008	8325	5-108	50	63,3	12x1,50	
C-Max (DM2) 1.8TDCi 2.0TDCi 2.0i 16"	06.03-09.10	6x15	**969,-**	1560509	F0515014	8795	5-108	52	63,3	12x1,50	
	06.03-09.10	6,5x16	**860,-**	1565603	F0516005	9975	5-108	52	63,3	12x1,50	
	06.03-09.10	6,5x16	**764,-**	1565605	F0516008	8325	5-108	50	63,3	12x1,50	
	06.03-09.10	6,5x16	**764,-**	1565614	9122358	F0516008	5-108	50	63,3	12x1,50	
B-Max (JK8)	07.12-09.17	6x15	**668,-**	1560515	F0515017	5000	4-108	37	63,3	12x1,50	Fr.o.m. 11.14-
	07.12-09.17	6x15	**512,-**	1560512	F0515016	7430	4-108	37	63,3	12x1,50	2
Hyundai											
Trajet -	03.00-12.08	6x15	**724,-**	1860501	HY515001	9520	5-114,3	46	67,1	12x1,50	2
ix35 (EL) (Facelift)	09.13-08.15	6,5x16	**800,-**	1865606	HY516012	8758	5-114,3	48	67,1	12x1,50	
I-40 (VF) (Kun bilar med 16" orig. kan ha 16", övriga 17")	04.11-09.19	7x16	**740,-**	1870601	HY516010	9317	5-114,3	40	67,1	12x1,50	
I-30 (PDE) 1.4T (103kW) 16"	01.17-	6x15	**800,-**	1860509	HY515022	4595	5-114,3	46	67,1	12x1,50	
1.6CRDi 16"	01.17-	6,5x16	**1020,-**	1865609	HY516015	6595	5-114,3	50	67,1	12x1,50	
I-30 (GD) cw 1.6CRDi 16"	07.12-12.16	6x15	**916,-**	1860506	HY515018	8147	5-114,3	46	67,1	12x1,50	
	07.12-12.16	6,5x16	**1040,-**	1865605	HY516011	9147	5-114,3	51	67,1	12x1,50	
I-30 (GD) 1.6CRDi 16"	02.12-12.16	6x15	**916,-**	1860506	HY515018	8147	5-114,3	46	67,1	12x1,50	
	02.12-12.16	6,5x16	**1040,-**	1865605	HY516011	9147	5-114,3	51	67,1	12x1,50	
I-20 (PB)	01.09-12.14	5x14	**696,-**	1850403	HY514008	6675	4-100	45	54,1	12x1,50	
	01.09-12.14	5,5x15	**572,-**	1855504	HY515013	7405	4-100	51	54,1	12x1,50	
I-20 (GB)	01.15-	6x15	**916,-**	1860507	HY515020	5015	4-100	47	54,1	12x1,50	
I-10 (PA) e-Sense, e-Motion 14"	03.08-11.13	4,5x13	**788,-**	2340303	KI513003	2490	4-100	46	54,1	12x1,50	
I-10 (IA)	12.13-11.19	5,5x14	**576,-**	1855405	HY514010	5335	4-100	47	54,1	12x1,50	
Iveco											
Daily 65C/70C (Dobbelmontage)	07.99-	6x16	**1348,-**	1460603	IV616014	X	6-205	124	161,0		
Daily 35S	08.06-	6,5x16	**1260,-**	1465601	IV616013	X	6-125	68	74,1	14x1,50B	
Daily 35C/40C/50C (Dobbelmontage)	07.99-	5x16	**1228,-**	1450601	IV616011	9485	6-170	109	130,0		
	07.99-	5,5x16	**1228,-**	1455601	IV616012	9725	6-170	107	131,0		
Daily 29L	08.06-	6,5x16	**1260,-**	1465601	IV616013	X	6-125	68	74,1	14x1,50B	
Jaguar											
X-Type -	03.01-07.06	6,5x16	**860,-**	1565603	F0516005	9975	5-108	52	63,3	12x1,50	
Jeep											
Renegade (BU) 1.6, 2.0 17"	08.14-	6,5x16	**884,-**	1465604	FL516008	8887	5-110	40	65,1	12x1,25B	
Kia											
Venga (YN)	01.10-	6x15	**748,-**	2360509	KI515009	6505	5-114,3	48	67,1	12x1,50	
Stonic (YB)	07.17-	6x15	**904,-**	2360510	KI515011	4065	4-100	46	54,1	12x1,50	
Sportage (SL) (Facelift)	02.14-11.15	6,5x16	**788,-**	2365605	KI516008	8837	5-114,3	36	67,1	12x1,50	
Soul (PS) GT (150kW) 18"	03.14-	6,5x16	**788,-**	2365604	KI516007	8787	5-114,3	47	67,1	12x1,50	
Rio (YB)	01.17-	6x15	**996,-**	2360511	R1-2002	KI515011	4-100	46	54,1	12x1,50	
	01.17-	6x15	**904,-**	2360510	KI515011	4065	4-100	46	54,1	12x1,50	
Rio (UB)	08.11-12.16	5,5x15	**744,-**	2355502	KI515010	7530	4-100	36	54,1	12x1,50	
Pro Ceed (JD) 1.6, 1.6CRDi 16"	06.12-11.18	6x15	**916,-**	1860506	HY515018	8147	5-114,3	46	67,1	12x1,50	
GT (150kW) 16"	06.12-11.18	6,5x16	**1040,-**	1865605	HY516011	9147	5-114,3	51	67,1	12x1,50	
Picanto (BA) 1.1CRDi 14"	02.08-03.17	4,5x13	**788,-**	2340303	KI513003	2490	4-100	46	54,1	12x1,50	
Picanto -	04.04-01.08	4,5x13	**788,-**	2340303	KI513003	2490	4-100	46	54,1	12x1,50	
Ceed (JD) sw 1.6, 1.6CRDi 16"	09.12-05.18	6x15	**916,-**	1860506	HY515018	8147	5-114,3	46	67,1	12x1,50	
(Bilar med 300mm bromsar 16")	09.12-05.18	6,5x16	**1040,-**	1865605	HY516011	9147	5-114,3	51	67,1	12x1,50	
Ceed (JD) 1.6, 1.6CRDi 16"	06.12-05.18	6x15	**916,-**	1860506	HY515018	8147	5-114,3	46	67,1	12x1,50	
(Bilar med 300mm bromsar 16")	06.12-05.18	6,5x16	**1040,-**	1865605	HY516011	9147	5-114,3	51	67,1	12x1,50	
Ceed (CD) 1.0T, 1.4T, 1.6CRDi 16"	06.18-	6x15	**800,-**	1860509	HY515022	4595	5-114,3	46	67,1	12x1,50	
	06.18-	6,5x16	**1020,-**	1865609	HY516015	6595	5-114,3	50	67,1	12x1,50	
Carens (RP)	03.13-	6,5x16	**824,-**	2365603	KI516006	7765	5-114,3	48	67,1	12x1,50	
Land Rover											
Freelander (LF) 2.2D (140kW) & 3.2 17"	12.06-01.15	6,5x16	**1180,-**	1565604	F0516007	8465	5-108	50	63,3	14x1,50	

Bilmerke - Bilmodell	Årsmodell	Felgdim.	**Veil. Pris eks. MVA**	Varenummer	KpZ Varenummer	Alt nr	PCD	ET	CB	Bolt - Mutter	Merknader
MAN											
TGE (SY1NE) 30/35	06.17-	6,5x16	**1228,-**	5065619	R1-2016	V0616031	5-120	60	65,1	14x1,50B	
TGE - (Dobbelmontage)	07.17-	5,5x16	**1908,-**	5055602	R1-2015	V0616030	6-205	114	161,0	14x1,50B	
Mazda											
MPV -	09.99-08.02	6x15	**608,-**	2760508	MA515008	9425	5-114,3	50	67,1	12x1,50	2
CX-3 (DJ1)	06.15-	6,5x16	**928,-**	2765605	MA516007	9062	5-114,3	50	67,1	12x1,50	
6 (GJ)	02.13-08.16	6,5x16	**736,-**	2765604	MA516006	9127	5-114,3	42	67,1	12x1,50	
3 (BL)	10.13-01.19	6,5x16	**928,-**	2765605	MA516007	9062	5-114,3	50	67,1	12x1,50	
3 (BL) 2.0, 2.2D 16"	05.09-09.13	6x15	**764,-**	2760512	MA515012	7223	5-114,3	52	67,1	12x1,50	2
2 (DJ1)	06.14-	5,5x15	**668,-**	2755501	MA515014	7225	4-100	40	54,1	12x1,50	
2 (DE)	10.07-05.14	6x14	**632,-**	2760401	MA514009	5270	4-100	45	54,1	12x1,50	
2 -	04.03-09.07	5,5x14	**640,-**	1555407	FO514010	6275	4-108	47	63,3	12x1,50	
Mercedes											
X-Class -	11.17-	7,5x17	**1328,-**	2875701	ME617002	9031	6-114,3	50	66,1	12x1,25	
Vito (W640) 119 BlueTEC (140kW) 17"	10.14-	6,5x16	**1256,-**	2865604	ME516027	6501	5-112	52	66,5	14x1,50B	R
	10.14-	6,5x16	**1308,-**	2865607	R1-1911	ME516027	5-112	52	66,5	14x1,50B	
	10.14-	6,5x17	**1408,-**	2865703	R1-1912	ME517007	5-112	50	66,5	14x1,50B	R
Vito (W639)	09.03-09.14	6x16	**1076,-**	2860601	ME616016	9095	5-112	54	66,6	14x1,50B	R
	09.03-09.14	6,5x16	**1148,-**	2865601	ME616017	9125	5-112	60	66,6	14x1,50B	R
Viano (W639) Viano 350 17"	09.03-04.14	6x16	**1076,-**	2860601	ME616016	9095	5-112	54	66,6	14x1,50B	R
	09.03-04.14	6,5x16	**1148,-**	2865601	ME616017	9125	5-112	60	66,6	14x1,50B	R
V-Class (W447) V250CDI 17"	05.14-	6,5x16	**1308,-**	2865607	R1-1911	ME516027	5-112	52	66,5	14x1,50B	
	05.14-	6,5x16	**1256,-**	2865604	ME516027	6501	5-112	52	66,5	14x1,50B	R
	05.14-	6,5x17	**1408,-**	2865703	R1-1912	ME517007	5-112	50	66,5	14x1,50B	R
Sprinter rwd 300/400-Series 4wd	06.18-	6,5x16	**1044,-**	2865606	ME516027	6131	6-130	54	84,1	14x1,50B	
Sprinter fwd 200/300/400-Series	06.18-	6,5x16	**1004,-**	2865602	ME616013	9487	6-130	62	84,0	14x1,50B	
Sprinter 500-Series 4wd (Dobbelmontage)	06.18-	5,5x16	**1416,-**	2855602	ME616036		6-205	110	161,0	14x1,50B	
Sprinter 500-Series (Dobbelmontage)	05.06-06.13	5,5x16	**1416,-**	2855602	ME616036		6-205	110	161,0		
Sprinter 400/500-Series (Dobbelmontage)	07.13-05.18	5,5x16	**1416,-**	2855602	ME616036		6-205	110	161,0		R
Sprinter 200/300-Series	07.13-05.18	5,5x16	**1088,-**	2855605	R1-1673	ME616037	6-130	51	84,1	14x1,50B	
	07.13-05.18	6,5x16	**1004,-**	2865602	ME616013	9487	6-130	62	84,0	14x1,50B	R
Sprinter 200/300-Series	05.06-06.13	5,5x16	**1088,-**	2855605	R1-1673	ME616037	6-130	51	84,1	14x1,50B	
	05.06-06.13	6,5x16	**1004,-**	2865602	ME616013	9487	6-130	62	84,0	14x1,50B	R
Sprinter -	01.00-04.06	6x15	**996,-**	2860506	ME615016	8555	5-130	75	84,0	14x1,50B	R
Sprinter -	02.95-12.99	6x15	**996,-**	2860506	ME615016	8555	5-130	75	84,0	14x1,50B	1, R
GLA (W245G) (Bilar med AMG sportpaket 18")	12.13-03.20	6,5x17	**1140,-**	2865701	ME517006	9787	5-112	38	66,5	14x1,50B	R
CLA (C117) CLA220CDI, 250 17"	04.13-03.19	6,5x16	**888,-**	2865603	ME516025	9732	5-112	49	66,6	14x1,50B	R
Citan (X) 5-bult	09.12-	6x15	**836,-**	4060505	RE515023	7215	5-108	44	60,1	12x1,50B	
C-Class (W205) sedan C250CDI 4-M, C350e, C400 17" (Biler med AMG sportpakke 17")	12.13-	6x16	**888,-**	2860605	ME516026	8952	5-112	36	66,5	14x1,50B	R, Kun C180
B-Class (W246) B200, B200CDI, B220CDI 16"	10.11-11.18	6,5x15	**836,-**	2865503	ME515052	7620	5-112	47	66,6	14x1,50B	R
B250 17"	10.11-11.18	6,5x16	**888,-**	2865603	ME516025	9732	5-112	49	66,6	14x1,50B	R
B-Class (T245) B180CDI, B200CDI, B200, B200 Turbo 16"	06.05-09.11	6x16	**884,-**	2860603	ME516017	8595	5-112	54	66,6	14x1,50B	R
A-Class (W176) A200, A200CDI, A220CDI 16"	08.12-04.18	6,5x15	**836,-**	2865503	ME515052	7620	5-112	47	66,6	14x1,50B	R
A250 17"	08.12-04.18	6,5x16	**888,-**	2865603	ME516025	9732	5-112	49	66,6	14x1,50B	R
A-Class (W169) A200, A200CDI, A200 Turbo 16"	09.04-07.12	6x16	**884,-**	2860603	ME516017	8595	5-112	54	66,6	14x1,50B	R
Mini											
Cooper (UKL-L) One	03.14-	5,5x15	**804,-**	0555502	BM515019		5-112	46	66,5	14x1,25B	
Cooper (UKL-L)	03.14-	5,5x15	**804,-**	0555502	BM515019		5-112	46	66,5	14x1,25B	
Mitsubishi											
Outlander (CW0)	11.12-07.18	6,5x16	**684,-**	1065604	PS516020	9657	5-114,3	38	67,1	12x1,50	2
i-MiEV (HA0) (Navhål 54.1 bak)	11.10-	4x15	**640,-**	1040501	PS515049	7160	4-100	35	56,1	12x1,50	
	11.10-	5x15	**640,-**	1050501	PS515050	7235	4-100	35	54,1	12x1,50	Kun bak
Nissan											
Sunny - 1.6, 2.0GTI 14"	03.91-09.95	5x13	**260,-**	3250305	NI513004	3920	4-100	40	59,1	12x1,25	2
Qashqai (J11) (Obs! 16" aluminium ej godkänt av Nissan)	12.13-	6,5x16	**1056,-**	3265605	R1-1897	NI516005	5-114,3	40	66,1	12x1,50B	
	12.13-	6,5x16	**1056,-**	3265604	NI516005	7856	5-114,3	40	66,1	12x1,50B	
Pulsar (C13)	05.14-09.18	6,5x16	**1056,-**	3265604	NI516005	7856	5-114,3	40	66,1	12x1,25	
	05.14-09.18	6,5x16	**1056,-**	3265605	R1-1897	NI516005	5-114,3	40	66,1	12x1,25	
Primastar -	12.14-	6x16	**1200,-**	4060605	R1-1896	RE616016	5-114,3	50	66,1	14x1,50B	
	12.14-	6x16	**1200,-**	4060604	RE616016	7503	5-114,3	50	66,1	14x1,50B	
Primastar -	01.03-11.14	6x16	**1292,-**	4060602	RE616008	9506	5-118	50	71,1	14x1,50B	
	01.03-11.14	6x16	**1292,-**	4060606	R1-1373	RE616008	5-118	50	71,1	14x1,50B	
NV400 (M1) rwd 3.5t	11.11-	7x16	**1020,-**	4070603	RE616013	9367	5-130	66	89,1	14x1,50B	Kun 3,5ton rwd
NV400 (M1) fwd 2.8t, 3.3t, 3.5t	11.11-	6,5x16	**984,-**	4065607	RE616012	7880	5-130	66	89,1	14x1,50B	Kun fwd
NV400 (M1) 4.5t (Dobbelmontage)	11.11-	5,5x16	**1784,-**	4055604	R1-1799	RE616015	6-200	117	142,0		
NV300 -	08.16-	6x16	**1200,-**	4060604	RE616016	7503	5-114,3	50	66,1	14x1,50B	
	08.16-	6x16	**1200,-**	4060605	R1-1896	RE616016	5-114,3	50	66,1	14x1,50B	
NV200 -	01.10-	5,5x14	**816,-**	3255407	NI614002		4-114,3	45	66,1	12x1,25	
Note (E12)	10.13-07.19	5,5x15	**788,-**	3255504	NI515010	7340	4-100	40	60,1	12x1,25	
Leaf (ZE1)	11.17-	6,5x16	**1056,-**	3265605	R1-1897	NI516005	5-114,3	40	66,1	12x1,25	
	11.17-	6,5x16	**1056,-**	3265604	NI516005	7856	5-114,3	40	66,1	12x1,25	
Leaf (ZE0)	12.10-10.17	6,5x16	**1056,-**	3265605	R1-1897	NI516005	5-114,3	40	66,1	12x1,25	
Juke (F15) (Facelift)	08.14-10.19	6,5x16	**1056,-**	3265604	NI516005	7856	5-114,3	40	66,1	12x1,25	
1.6 Turbo 17"	08.14-10.19	6,5x16	**1056,-**	3265605	R1-1897	NI516005	5-114,3	40	66,1	12x1,25	

Forts. neste side »

Bilmerke - Bilmodell	Årsmodell	Felgdim.	Veil. Pris eks. MVA	Varenummer	KpZ Varenummer	Alt nr	PCD	ET	CB	Bolt - Mutter	Merknader
Nissan (forts.)											
Interstar -	09.02-12.11	6x16	**964,-**	4060601	RE616003	9495	5-130	66	89,1	14x1,50B	
Evalia -	05.11-	5,5x14	**816,-**	3255407	NI614002		4-114,3	45	66,1	12x1,25	
Cabstar (F241) NT400 6-bult (Dobbelmontage)	04.12-	5x15	**1228,-**	3250501	R1-1972	N/A	6-170	130	106,0		
Cabstar (F24) NT400 5-bult (Dobbelmontage)	05.07-	5x15	**1292,-**	4050503	R1-1833	RE615005	5-170	106	130,0		
Opel											
Zafira (P-J/SW) 1.6 Turbo, 2.0CDTi (121/143kW) 17"	01.12-05.19	6,5x16	**824,-**	3465607	OP516014	9327	5-115	41	70,3	12x1,50	
Zafira (B) 1.9CDTi, 2.0 Turbo 16" 2.2i 16"	07.05-12.11 07.05-12.11	6,5x15 6,5x16	**784,-** **944,-**	3465505 3465603	OP515027 OP516007	9245 9045	5-110 5-110	35 37	65,1 65,1	12x1,50B 12x1,50B	
Vivaro (F7)	04.19-	7x16	**1008,-**	3570607	PS616003	7505	5-108	46	65,1	12x1,25B	
Vivaro -	12.14-03.19 12.14-03.19	6x16 6x16	**1200,-** **1200,-**	4060605 4060604	R1-1896 RE616016	RE616016 7503	5-114,3 5-114,3	50 50	66,1 66,1	14x1,50B 14x1,50B	
Vivaro -	07.01-11.14 07.01-11.14	6x16 6x16	**1292,-** **1292,-**	4060602 4060606	RE616008 R1-1373	9506 RE616008	5-118 5-118	50 50	71,1 71,1	14x1,50B 14x1,50B	
Vectra (C) 2.0 Turbo (129kW), 3.0CDTi, 3.2 16"	04.02-10.08	6,5x15	**784,-**	3465505	OP515027	9245	5-110	35	65,1	12x1,50B	
Vectra (B) 4-bult	10.95-12.98	5,5x14	**592,-**	3455409	OP514021	6515	4-100	39	56,6	12x1,50B	1
Signum - 2.0 Turbo, 3.0CDTi, 3.2 V6 16"	05.03-06.08	6,5x15	**784,-**	3465505	OP515027	9245	5-110	35	65,1	12x1,50B	
Movano (MR) rwd 3.5t	04.10-	7x16	**1020,-**	4070603	RE616013	9367	5-130	66	89,1	14x1,50B	Kun 3,5ton rwd
Movano (MR) fwd 2.8t, 3.3t, 3.5t	04.10-	6,5x16	**984,-**	4065607	RE616012	7880	5-130	66	89,1	14x1,50B	Kun fwd
Movano (MR) 4.5t (Dobbelmontage)	04.10-	5,5x16	**1784,-**	4055604	R1-1799	RE616015	6-200	117	142,0		
Movano -	08.00-03.10	6x16	**964,-**	4060601	RE616003	9495	5-130	66	89,1	14x1,50B	
Mokka (J-A) X	10.16-	6,5x16	**808,-**	3465608	OP516015	9272	5-105	38	56,6	12x1,50	
Mokka (J-A)	11.12-09.16	6,5x16	**808,-**	3465608	OP516015	9272	5-105	38	56,6	12x1,50	
Meriva (B) 1.4 Turbo (103kW) 16" 1.7CDTI 16"	05.10- 05.10-	6,5x15 6,5x16	**784,-** **944,-**	3465505 3465603	OP515027 OP516007	9245 9045	5-110 5-110	35 37	65,1 65,1	12x1,50B 12x1,50B	
Karl (D-A)	06.15-	5x14	**572,-**	3450401	OP514022		4-100	38	56,5	12x1,50	
Insignia (Z-B) sports tourer 2.0CDTi, 2.0 Turbo 17"	04.17-	6,5x16	**824,-**	3465607	OP516014	9327	5-115	41	70,3	12x1,50	
Insignia (Z-B) grand sport 2.0CDTi, 2.0 Turbo 17"	04.17-	6,5x16	**824,-**	3465607	OP516014	9327	5-115	41	70,3	12x1,50	
Insignia (0G-A) country tourer	10.13-08.17	7x17	**996,-**	3470702	OP517003	X	5-120	41	67,1	14x1,50	
Insignia (0G-A) 1.6T, 2.0T, 2.8T 17" 2.0 CDTI (118/140kW) 17"	11.08-09.13 11.08-09.13	6,5x16 7x17	**968,-** **996,-**	3465605 3470702	OP516012 OP517003	9623 X	5-120 5-120	41 41	67,1 67,1	14x1,50 14x1,50	2
Grandland X (Z) 1.6T (133kW), 2.0CDTi 17"	10.17-	7x16	**980,-**	3570606	PS516023	9833	5-108	44	65,1	12x1,25B	
Crossland X - 1.2T (96kW) 16" 1.6CDTi (88kW) 16"	08.17- 08.17-	6,5x15 6,5x15	**900,-** **904,-**	3565510 3565508	R1-1889 PS515052	PS515052 7385	4-108 4-108	20 20	65,1 65,1	12x1,25B 12x1,25B	
Corsa (E) 4-bult 1.0T, 1.4T, 1.3CDTi 15"	11.14-09.19 11.14-09.19	5,5x14 6x15	**592,-** **716,-**	3455409 3460509	OP514021 OP515024	6515 6445	4-100 4-100	39 39	56,6 56,6	12x1,50B 12x1,50B	
Corsa (D) 4-bult 1.3CDTi (66kW), 1.4i 15"	09.06-10.14 09.06-10.14	5,5x14 6x15	**592,-** **716,-**	3455409 3460509	OP514021 OP515024	6515 6445	4-100 4-100	39 39	56,6 56,6	12x1,50B 12x1,50B	
Corsa (C) Combo 4-bult	11.01-09.11 11.01-09.11	5,5x14 6x15	**584,-** **924,-**	3455408 3460508	OP614001 OP615001	6480 8375	4-100 4-100	49 49	56,6 56,6	12x1,50B 12x1,50B	
Combo (E) cargo	10.18- 10.18-	6,5x15 6,5x16	**884,-** **896,-**	3565511 3565604	PS615004 PS616004		5-108 5-108	42 47	65,1 65,1	12x1,25B 12x1,25B	
Combo (D) (Bilar med lång hjulbas, 3105mm kräver 16")	11.11-09.18 11.11-09.18	6x15 6x16	**916,-** **868,-**	1460510 1460609	FL615006 FL616007	7395	5-98 5-98	39 36	58,1 58,1	12x1,25B 12x1,25B	
Astra (K) sports tourer 1.4i (92/110kW) 16"	04.16-	6,5x16	**776,-**	3465609	OP516017	7035	5-105	41	56,5	12x1,50	
Astra (K) 1.4i (92/110kW) 16" 1.6CDTi (81/110kW) 16"	09.15- 09.15-	6x15 6,5x16	**640,-** **776,-**	3460511 3465609	OP515029 OP516017	6365 7035	5-105 5-105	37 41	56,5 56,5	12x1,50 12x1,50	
Astra (J) 5-115 1.6CDTI, 1.6 Turbo 1.7CDTI, 2.0CDTI	11.09-08.15	6,5x16	**824,-**	3465607	OP516014	9327	5-115	41	70,3	12x1,50	
Astra (J) 5-105 1.3CDTI, 1.4, 1.4 Turbo, 1.6	11.09-08.15	6,5x16	**824,-**	3465606	OP516013	9247	5-105	39	56,6	12x1,50	
Astra (H) TwinTop	04.06-10.09	6,5x16	**944,-**	3465603	OP516007	9045	5-110	37	65,1	12x1,50B	
Astra (H) 5-bult 1.6i Turbo, 1.9CDTi 16" 2.0i Turbo 16"	03.04-10.09 03.04-10.09	6,5x15 6,5x16	**784,-** **944,-**	3465505 3465603	OP515027 OP516007	9245 9045	5-110 5-110	35 37	65,1 65,1	12x1,50B 12x1,50B	
Astra (F) 4-bult	09.91-03.98	5,5x14	**592,-**	3455409	OP514021	6515	4-100	39	56,6	12x1,50B	1
Antara (L-A)	12.06-05.15	6,5x16	**384,-**	3465604	OP516011	7885	5-115	46	70,1	12x1,50	
Ampera (D1J0I)	12.11-07.17	6,5x16	**824,-**	3465607	OP516014	9327	5-115	41	70,3	12x1,50	
Agila -	04.08-04.15	5x14	**564,-**	4850402	SU514006	5155	4-100	45	54,1	12x1,50B	
Adam (SD) 1.0T (85kW) 15" 1,4T (110kW) 15"	10.12-06.19 10.12-06.19	5,5x14 6x15	**592,-** **716,-**	3455409 3460509	OP514021 OP515024	6515 6445	4-100 4-100	39 39	56,6 56,6	12x1,50B 12x1,50B	
Peugeot											
Traveller (V)	06.16- 06.16-	7x16 7x16	**1008,-** **1008,-**	3570608 3570607	R1-1980 PS616003	PS616003 7505	5-108 5-108	46 46	65,1 65,1	12x1,25B 12x1,25B	
Rifter (E)	09.18- 09.18-	6,5x15 6,5x16	**884,-** **896,-**	3565511 3565604	PS615004 PS616004		5-108 5-108	42 47	65,1 65,1	12x1,25B 12x1,25B	
Partner Origin	05.08-12.09	6x15	**748,-**	3560501	PS515039	8475	4-108	18	65,1	12x1,25B	
Partner (E) 1.2, 1.5 (75/96kW) 16"	12.18- 12.18-	6,5x15 6,5x16	**884,-** **896,-**	3565511 3565604	PS615004 PS616004		5-108 5-108	42 47	65,1 65,1	12x1,25B 12x1,25B	
Partner (7) Tepee	05.08-08.18 05.08-08.18	6,5x15 6,5x16	**836,-** **896,-**	3565506 1065603	PS615003 PS516012	8477 7860	4-108 4-108	27 26	65,1 65,1	12x1,25B 12x1,25B	
Partner - 1.6i (80kW) 03.03- 15" 2.0HDi (66kW) 03.03- 15"	09.96-04.08 09.96-04.08	5,5x14 6x15	**676,-** **748,-**	1055402 3560501	PS614002 PS515039	6395 8475	4-108 4-108	24 18	65,1 65,1	12x1,25B 12x1,25B	
iON - (Navhål 54.1 bak)	11.10- 11.10-	4x15 5x15	**640,-** **640,-**	1040501 1050501	PS515049 PS515050	7160 7235	4-100 4-100	35 35	56,1 54,1	12x1,50 12x1,50	Kun bak
Expert II 2.0HDi 16"	10.06-05.16 10.06-05.16	7x16 7x16	**1016,-** **1060,-**	3570609 3570602	R1-1675 PS616001	PS616001 7780	5-108 5-108	42 42	65,1 65,1	12x1,25B 12x1,25B	
Expert (V)	06.16-	7x16	**1008,-**	3570607	PS616003	7505	5-108	46	65,1	12x1,25B	

Forts. neste side »

Bilmerke - Bilmodell	Årsmodell	Felgdim.	**Veil. Pris eks. MVA**	Varenummer	KpZ Varenummer	Alt nr	PCD	ET	CB	Bolt - Mutter	Merknader
Peugeot (forts.)											
	06.16-	7x16	**1008,-**	3570608	R1-1980	PS616003	5-108	46	65,1	12x1,25B	
Boxer (small chassis)	06.06- 06.06-	6x15 6x16	**896,-** **1344,-**	1460515 1460612	FL615007 R1-1909	8877 FL616008	5-118 5-118	68 68	71,1 71,1	14x1,50B 14x1,50B	
Boxer (small chassis)	03.94-05.06	6x15	**896,-**	1460515	FL615007	8877	5-118	68	71,1	14x1,50B	2
Boxer (large chassis)	06.06- 06.06-	6x16 6x16	**1304,-** **1304,-**	1460610 1460611	FL616009 R1-1910	 FL616009	5-130 5-130	68 68	78,1 78,1	16x1,50B 16x1,50B	
Boxer (large chassis)	03.94-05.06 03.94-05.06	6x16 6x16	**1304,-** **1304,-**	1460611 1460610	R1-1910 FL616009	FL616009	5-130 5-130	68 68	78,1 78,1	16x1,50B 16x1,50B	 2
Bipper (A) Tepee	07.08-	6x15	**884,-**	1460509	FL515013	7680	4-98	44	58,1	12x1,25B	
Bipper (225)	02.08- 02.08-	5,5x14 6x15	**696,-** **884,-**	1455409 1460509	FL614004 FL515013	6805 7680	4-98 4-98	44 44	58,1 58,1	12x1,25B 12x1,25B	
508 (8) sw 2.2HDi 18"	03.11-10.18	7x16	**724,-**	3570605	PS516019	9983	5-108	47	65,1	12x1,25B	
508 (8) sedan 2.2HDi 18"	03.11-10.18	7x16	**724,-**	3570605	PS516019	9983	5-108	47	65,1	12x1,25B	
5008 (0)	10.09-02.17	7x16	**932,-**	3570604	PS516017	5008	4-108	29	65,1	12x1,25B	
406 sw 1.9TD, 2.0, 2.0HDi, 2.2, 2.2HDi, 3.0 15"	10.95-04.04	6x15	**748,-**	3560501	PS515039	8475	4-108	18	65,1	12x1,25B	
406 sedan 1.9TD, 2.0, 2.0HDi, 2.2, 2.2HDi, 3.0 15"	10.95-04.04	6x15	**748,-**	3560501	PS515039	8475	4-108	18	65,1	12x1,25B	
4008 (B)	05.12-	6,5x16	**684,-**	1065604	PS516020	9657	5-114,3	38	67,1	12x1,50	2
308 (L) 1.6 Turbo (115kW) 16"	09.13- 09.13-	6,5x15 7x16	**852,-** **980,-**	3565509 3570606	PS515053 PS516023	7823 9833	5-108 5-108	42 44	65,1 65,1	12x1,25B 12x1,25B	
308 (4) 1.6 Turbo, 2.0HDi 16", GTI (147kW) 17"	10.07-08.13	6,5x15	**748,-**	3565507	PS515048	7815	4-108	27	65,1	12x1,25B	
307 sw 2.0 (103kW) 16"	06.01-09.07 06.01-09.07	6x15 6,5x16	**720,-** **968,-**	3560502 3565601	PS515037 PS516003	8690 9695	4-108 4-108	27 31	65,1 65,1	12x1,25B 12x1,25B	
307 cab	11.03-02.09	6,5x16	**968,-**	3565601	PS516003	9695	4-108	31	65,1	12x1,25B	
307 - 2.0 (103kW) 16"	06.01-09.07 06.01-09.07	6x15 6,5x16	**720,-** **968,-**	3560502 3565601	PS515037 PS516003	8690 9695	4-108 4-108	27 31	65,1 65,1	12x1,25B 12x1,25B	
306 -	03.93-05.01	6x15	**748,-**	3560501	PS515039	8475	4-108	18	65,1	12x1,25B	
208 (C) 1.6 Turbo (115kW), GTI (147kW) 16"	05.12-09.19	6x15	**720,-**	3560504	PS515045	8055	4-108	23	65,1	12x1,25B	
207 (W) 1.6 Turbo (110/128kW) 16"	06.06-06.15	6x15	**720,-**	3560504	PS515045	8055	4-108	23	65,1	12x1,25B	
206 cab	10.00-02.07	6x15	**720,-**	3560502	PS515037	8690	4-108	27	65,1	12x1,25B	
206 - 1.6HDi (80kW), 2.0 GTI 15" 2.0i RC 15"	10.98-11.06 10.98-11.06	5,5x14 6x15	**616,-** **720,-**	3555402 3560502	PS514021 PS515037	5990 8690	4-108 4-108	34 27	65,1 65,1	12x1,25B 12x1,25B	
2008 (C) 1.2T (96kW) 16"	06.13-10.19 06.13-10.19	6,5x15 6,5x15	**904,-** **900,-**	3565508 3565510	PS515052 R1-1889	7385 PS515052	4-108 4-108	20 20	65,1 65,1	12x1,25B 12x1,25B	
108 (P)	07.14-	4,5x14	**744,-**	4945402	T0514021	5770	4-100	35	54,1	12x1,50B	
107 (P)	09.05-06.14	4,5x14	**632,-**	4945401	T0514017	4940	4-100	39	54,1	12x1,50B	
1007 (K)	07.05-11.09 07.05-11.09	5,5x14 6x15	**616,-** **720,-**	1055403 3560502	PS514022 PS515037	6215 8690	4-108 4-108	24 27	65,1 65,1	12x1,25B 12x1,25B	
Renault											
Twingo (AH)	09.14- 09.14-	5x15 5,5x15	**656,-** **668,-**	4050502 4055503	RE515032 RE515033	4001 4002	4-100 4-100	38 36	60,1 60,1	12x1,50B 12x1,50B	Kun fram Kun bak
Twingo -	09.93-08.07	5,5x14	**652,-**	4055404	RE514009	6530	4-100	36	60,1	12x1,50B	
Trafic (L)	09.14- 09.14-	6x16 6x16	**1200,-** **1200,-**	4060605 4060604	R1-1896 RE616016	RE616016 7503	5-114,3 5-114,3	50 50	66,1 66,1	14x1,50B 14x1,50B	
Trafic -	07.01-11.14 07.01-11.14	6x16 6x16	**1292,-** **1292,-**	4060602 4060606	RE616008 R1-1373	9506 RE616008	5-118 5-118	50 50	71,1 71,1	14x1,50B 14x1,50B	
Talisman (RFD) 1.6dCi (118kW) 17" 1.6Turbo (110/147kW) 17"	12.15-	6,5x16	**884,-**	4065610	RE516021		5-114,3	41	66,1	12x1,50B	
Scenic (JZ) 1.4TCe, 1.5dCi, 1.6dCi 16" 1.9dCi 16", 2.0dCi 17"	09.09-07.16 09.09-07.16	6,5x15 6,5x16	**820,-** **884,-**	4065506 4065606	RE515026 RE516013	7305 9563	5-114,3 5-114,3	43 47	66,1 66,1	12x1,50B 12x1,50B	
Modus (P)	09.04-12.12	6x15	**836,-**	4060504	RE515021	7965	4-100	50	60,1	12x1,50B	
Megane (Z) coupe 2.0TCe 17"	02.09-12.15	6,5x16	**884,-**	4065606	RE516013	9563	5-114,3	47	66,1	12x1,50B	
Megane (Z) 1.6dCi, 1.9dCi 16" 2.0TCe 17"	11.08-12.15 11.08-12.15	6,5x15 6,5x16	**820,-** **884,-**	4065506 4065606	RE515026 RE516013	7305 9563	5-114,3 5-114,3	43 47	66,1 66,1	12x1,50B 12x1,50B	
Megane (RFB) GT (151kW) 17"	01.16- 01.16-	6x15 6,5x16	**820,-** **884,-**	4060512 4065610	RE515035 RE516021		5-114,3 5-114,3	35 41	66,1 66,1	12x1,50B 12x1,50B	
Megane (M) 2.0 2.0T	10.02-10.08	6,5x16	**1004,-**	4065604	RE516010	9985	4-100	49	60,1	12x1,50B	
Megane (M)	10.02-10.08	6,5x16	**1004,-**	4065604	RE516010	9985	4-100	49	60,1	12x1,50B	
Megane (JM) Scenic 1.9dCi, 2.0i, 2.0 Turbo 16"	07.03-08.09	6,5x16	**1004,-**	4065604	RE516010	9985	4-100	49	60,1	12x1,50B	
Megane -	01.96-09.02	5,5x14	**652,-**	4055404	RE514009	6530	4-100	36	60,1	12x1,50B	
Maxity - (Dobbelmontage)	05.07-	5x15	**1292,-**	4050503	R1-1833	RE615005	5-170	106	130,0		
Master (MA) rwd 3.5t	04.10-	7x16	**1020,-**	4070603	RE616013	9367	5-130	66	89,1	14x1,50B	Kun 3,5ton rwd
Master (MA) fwd 2.8t, 3.3t, 3.5t	04.10-	6,5x16	**984,-**	4065607	RE616012	7880	5-130	66	89,1	14x1,50B	Kun fwd
Master (MA) 4.5t (Dobbelmontage)	04.10-	5,5x16	**1784,-**	4055604	R1-1799	RE616015	6-200	117	142,0		
Master -	08.00-03.10	6x16	**964,-**	4060601	RE616003	9495	5-130	66	89,1	14x1,50B	
Laguna (T) 2.0dCi, 2.0 Turbo, 3.0dCi 17"	10.07-11.15	7x16	**748,-**	4070602	RE516015	9583	5-114,3	47	66,1	14x1,50B	
Kangoo (FW) 5-bult 4wd 16"	01.08-	6x15	**836,-**	4060505	RE515023	7215	5-108	44	60,1	12x1,50B	
Kangoo (FW) 4-bult	01.08-	5,5x14	**788,-**	4055409	RE514019	6335	4-100	45	60,1	12x1,50B	
Kangoo - 1.2i (55kW), 1.5dCi (60kW), 1.6i 14" 4x4 15"	05.98-12.07	5,5x14	**652,-**	4055404	RE514009	6530	4-100	36	60,1	12x1,50B	
Kadjar (RFE)	07.15- 07.15-	6,5x16 6,5x16	**1056,-** **1056,-**	3265604 3265605	NI516005 R1-1897	7856 NI516005	5-114,3 5-114,3	40 40	66,1 66,1	12x1,50B 12x1,50B	
Grand Scenic (JZ) 2.0dCi 17"	09.09-08.16	6,5x16	**884,-**	4065606	RE516013	9563	5-114,3	47	66,1	12x1,50B	
Grand Scenic -	04.04-08.09	6,5x16	**1004,-**	4065604	RE516010	9985	4-100	49	60,1	12x1,50B	
											Forts. neste side »

Bilmerke - Bilmodell	Årsmodell	Felgdim.	**Veil. Pris eks. MVA**	Varenummer	KpZ Varenummer	Alt nr	PCD	ET	CB	Bolt - Mutter	Merknader
Renault (forts.)											
Grand Modus (P)	01.08-12.12	6x15	**836,-**	4060504	RE515021	7965	4-100	50	60,1	12x1,50B	
Fluence (Z) Z.E. 16"	04.10-10.12	6,5x15	**820,-**	4065506	RE515026	7305	5-114,3	43	66,1	12x1,50B	
	04.10-10.12	6,5x16	**884,-**	4065606	RE516013	9563	5-114,3	47	66,1	12x1,50B	
Clio (R) grandtour	05.08-01.13	6x15	**836,-**	4060504	RE515021	7965	4-100	50	60,1	12x1,50B	
Clio (R)	10.12-08.19	6x15	**860,-**	4060506	RE515027	7777	4-100	40	60,1	12x1,50B	
Clio (R)	09.05-09.12	6x15	**836,-**	4060504	RE515021	7965	4-100	50	60,1	12x1,50B	
Clio (B) 2.0i 15"	09.98-08.05	5,5x14	**652,-**	4055404	RE514009	6530	4-100	36	60,1	12x1,50B	
19 -	01.89-12.95	5,5x14	**652,-**	4055404	RE514009	6530	4-100	36	60,1	12x1,50B	
Saab											
9-5 - 2.0T (162kw), 2.0TTiD (140kw) 17"	05.10-12.11	6,5x16	**968,-**	3465605	OP516012	9623	5-120	41	67,1	14x1,50	2
2.8T (220kw) 18"	05.10-12.11	7x17	**996,-**	3470702	OP517003	X	5-120	41	67,1	14x1,50	
Seat											
Toledo (NH) 1.2TSI (77kW), 1.4TSI 15"	11.12-	5x14	**584,-**	5050401	V0514015	5210	5-100	35	57,1	14x1,50B	R
1.6TDI 15"	11.12-	6x15	**676,-**	5060512	V0515030	7760	5-100	37	57,1	14x1,50B	R
Toledo (5P)	12.04-10.12	6,5x16	**804,-**	5065603	V0516015	9915	5-112	50	57,1	14x1,50B	R
Toledo - 1.8i, 1.8T 15"	04.99-11.04	6x15	**740,-**	5060506	V0515011	8380	5-100	38	57,1	14x1,50B	R
1.9TDI (81/96/110kW) 15"	04.99-11.04	6,5x16	**992,-**	5065601	V0516005	9680	5-100	42	57,1	14x1,50B	R
Mii (AA)	09.11-	5x14	**596,-**	5050403	V0514021	6795	4-100	35	57,1	12x1,50B	R
Leon (5F) st 1.8TSI, 2.0TDI (135kW) 16"	12.13-02.20	6x15	**672,-**	5060514	V0515031	7755	5-112	43	57,1	14x1,50B	R
	12.13-02.20	6x16	**836,-**	5060604	V0516034	8247	5-112	48	57,1	14x1,50B	R
	12.13-02.20	6,5x16	**776,-**	5065614	V0516035	8667	5-112	46	57,1	14x1,50B	R
Leon (5F) 1.8TSI, 2.0TDI (135kW) 16"	12.12-02.20	6x15	**672,-**	5060514	V0515031	7755	5-112	43	57,1	14x1,50B	R
	12.12-02.20	6x16	**836,-**	5060604	V0516034	8247	5-112	48	57,1	14x1,50B	R
	12.12-02.20	6,5x16	**776,-**	5065614	V0516035	8667	5-112	46	57,1	14x1,50B	R
Leon - Cupra 17"	09.05-05.10	6x16	**820,-**	0360603	AD516012	9535	5-112	50	57,1	14x1,50B	R
Cupra R 18"	09.05-05.10	6,5x16	**804,-**	5065603	V0516015	9915	5-112	50	57,1	14x1,50B	R
Leon - 1.8i, 1.9TDI (81/110kW) 15"	12.99-08.05	6x15	**740,-**	5060506	V0515011	8380	5-100	38	57,1	14x1,50B	R
1.8T (132kW) 16"	12.99-08.05	6,5x16	**992,-**	5065601	V0516005	9680	5-100	42	57,1	14x1,50B	R
Ibiza (KJ) 1.0TSI (70/85kW) 15"	06.17-	5x14	**596,-**	5050404	V0514022	3055	5-100	38	57,1	14x1,50B	
1.0TDI, 1.5TSI 15"	06.17-	5,5x15	**672,-**	5055501	V0515032	4055	5-100	40	57,1	14x1,50B	
Ibiza (6L) 1.9TDi (96kW) 15"	04.02-05.08	5x14	**584,-**	5050401	V0514015	5210	5-100	35	57,1	14x1,50B	R
FR 16", Cupra 17"	04.02-05.08	6x14	**676,-**	5060404	V0514016	7280	5-100	43	57,1	14x1,50B	R
Ibiza (6J) st 1.6TDI (77kW) 15"	06.10-05.17	5x14	**584,-**	5050401	V0514015	5210	5-100	35	57,1	14x1,50B	R
Ibiza (6J) 1.6TDI (77kW) 15"	06.08-05.17	5x14	**584,-**	5050401	V0514015	5210	5-100	35	57,1	14x1,50B	R
Cupra 15"	06.08-05.17	6x15	**676,-**	5060512	V0515030	7760	5-100	37	57,1	14x1,50B	R
Exeo (3R)	02.09-05.13	7x16	**884,-**	5070605	V0516029	9257	5-112	45	57,1	14x1,50B	R
Cordoba (6L) 1.9TDi (96kW) 15"	01.03-11.09	5x14	**584,-**	5050401	V0514015	5210	5-100	35	57,1	14x1,50B	R
	01.03-11.09	6x14	**676,-**	5060404	V0514016	7280	5-100	43	57,1	14x1,50B	R
Ateca (5FP) 2.0TDI (140kW) 17"	07.16-	6,5x16	**860,-**	5065617	V0516039	6665	5-112	43	57,1	14x1,50B	R
Arona (KJ)	10.17-	6x16	**912,-**	5060607	V0516040	6955	5-100	45	57,1	14x1,50B	
Altea (5P) XL	12.06-06.15	6,5x16	**804,-**	5065603	V0516015	9915	5-112	50	57,1	14x1,50B	R
Altea (5P)	06.04-06.15	6,5x16	**804,-**	5065603	V0516015	9915	5-112	50	57,1	14x1,50B	R
Alhambra (7N)	09.10-	6,5x16	**1020,-**	5065610	V0516031		5-112	33	57,1	14x1,50B	R
Skoda											
Yeti (5L)	09.09-07.17	6x16	**820,-**	0360603	AD516012	9535	5-112	50	57,1	14x1,50B	R
	09.09-07.17	7x16	**884,-**	5070605	V0516029	9257	5-112	45	57,1	14x1,50B	R
Superb (3T) combi 2.0TSI (206kW) 17"	09.15-06.19	6,5x16	**836,-**	5065615	V0516037	8426	5-112	41	57,1	14x1,50B	R
Superb (3T) 2.0TSI (206kW) 17"	05.15-06.19	6,5x16	**836,-**	5065615	V0516037	8426	5-112	41	57,1	14x1,50B	R
Superb (3T) 3.6 17"	08.08-04.15	7x16	**884,-**	5070605	V0516029	9257	5-112	45	57,1	14x1,50B	R
Roomster (5J) 1.4TDI (59kW) 15"	09.06-04.15	5x14	**584,-**	5050401	V0514015	5210	5-100	35	57,1	14x1,50B	R
1.6i, 1.6TDI, 1.9TDI 15"	09.06-04.15	6x14	**664,-**	4460401	V0514020	7250	5-100	37	57,1	14x1,50B	R
	09.06-04.15	6x15	**740,-**	5060501	V0515025	8000	5-100	43	57,1	14x1,50B	R
Rapid (NH) spaceback	10.13-	6x15	**676,-**	5060512	V0515030	7760	5-100	37	57,1	14x1,50B	R
Rapid (NH) 1.2TSI (77kW), 1.4TSI 15"	10.12-	5x14	**584,-**	5050401	V0514015	5210	5-100	35	57,1	14x1,50B	R
1.6, 1.6TDI 15"	10.12-	6x15	**676,-**	5060512	V0515030	7760	5-100	37	57,1	14x1,50B	R
Praktik - 1.6TDI 15"	06.03-04.15	5x14	**584,-**	5050401	V0514015	5210	5-100	35	57,1	14x1,50B	R
	06.03-04.15	6x14	**664,-**	4460401	V0514020	7250	5-100	37	57,1	14x1,50B	R
	06.03-04.15	6x15	**740,-**	5060501	V0515025	8000	5-100	43	57,1	14x1,50B	R
Octavia (5E) sedan (Facelift)	02.17-02.20	6x16	**836,-**	5060604	V0516034	8247	5-112	48	57,1	14x1,50B	
	02.17-02.20	6,5x16	**776,-**	5065614	V0516035	8667	5-112	46	57,1	14x1,50B	
Octavia (5E) sedan 1.4TSI, 1.8TSI, 2.0TDI 16"	01.13-01.17	6x15	**672,-**	5060514	V0515031	7755	5-112	43	57,1	14x1,50B	R
RS 17"	01.13-01.17	6x16	**836,-**	5060604	V0516034	8247	5-112	48	57,1	14x1,50B	R
	01.13-01.17	6,5x16	**776,-**	5065614	V0516035	8667	5-112	46	57,1	14x1,50B	R
Octavia (5E) combi (Facelift)	02.17-02.20	6x16	**836,-**	5060604	V0516034	8247	5-112	48	57,1	14x1,50B	
	02.17-02.20	6,5x16	**776,-**	5065614	V0516035	8667	5-112	46	57,1	14x1,50B	
Octavia (5E) combi 1.4TSI, 1.8TSI, 2.0TDI 16"	06.13-01.17	6x15	**672,-**	5060514	V0515031	7755	5-112	43	57,1	14x1,50B	R
RS 17"	06.13-01.17	6x16	**836,-**	5060604	V0516034	8247	5-112	48	57,1	14x1,50B	R
	06.13-01.17	6,5x16	**776,-**	5065614	V0516035	8667	5-112	46	57,1	14x1,50B	R
Octavia (1Z) sedan RS 16"	06.04-12.12	6x15	**664,-**	5060509	V0515024	9165	5-112	47	57,1	14x1,50B	R
	06.04-12.12	6x16	**820,-**	0360603	AD516012	9535	5-112	50	57,1	14x1,50B	Även RS
	06.04-12.12	6,5x16	**804,-**	5065603	V0516015	9915	5-112	50	57,1	14x1,50B	R
Octavia (1Z) scout	03.07-03.13	6x16	**820,-**	0360603	AD516012	9535	5-112	50	57,1	14x1,50B	R
Octavia (1Z) combi RS 16"	06.04-05.13	6x15	**664,-**	5060509	V0515024	9165	5-112	47	57,1	14x1,50B	R
	06.04-05.13	6x16	**820,-**	0360603	AD516012	9535	5-112	50	57,1	14x1,50B	Även RS
	06.04-05.13	6,5x16	**804,-**	5065603	V0516015	9915	5-112	50	57,1	14x1,50B	R
Octavia (1U) sedan 1.8, 1.8T, 1.9TDi, 2.0 15"	04.97-05.04	6x15	**740,-**	5060506	V0515011	8380	5-100	38	57,1	14x1,50B	R
RS 16"	04.97-05.04	6,5x16	**992,-**	5065601	V0516005	9680	5-100	42	57,1	14x1,50B	R

Forts. neste side »

Bilmerke - Bilmodell	Årsmodell	Felgdim.	**Veil. Pris eks. MVA**	Varenummer	KpZ Varenummer	Alt nr	PCD	ET	CB	Bolt - Mutter	Merknader
Skoda (forts.)											
Octavia (1U) combi 1.8, 1.8T, 1.9TDi, 2.0 15"	04.97-05.04	6x15	**740,-**	5060506	V0515011	8380	5-100	38	57,1	14x1,50B	R
RS 16"	04.97-05.04	6,5x16	**992,-**	5065601	V0516005	9680	5-100	42	57,1	14x1,50B	R
Karoq (NU) 4wd 17"	08.17-	6,5x16	**860,-**	5065617	V0516039	6665	5-112	43	57,1	14x1,50B	
Fabia (5J) 1.0TSI/1.2TSI (81kW) 15"	11.14-	5x14	**584,-**	5050401	V0514015	5210	5-100	35	57,1	14x1,50B	R
1.4TDI (77kW) 15"	11.14-	6x15	**676,-**	5060512	V0515030	7760	5-100	37	57,1	14x1,50B	R
Fabia (5J) 1.2TSI (77kW), 1.6TDI (77kW) 15"	05.07-10.14	5x14	**584,-**	5050401	V0514015	5210	5-100	35	57,1	14x1,50B	Ej 1,6, R
1.9TDi, RS (132kW) 15"	05.07-10.14	6x14	**664,-**	4460401	V0514020	7250	5-100	37	57,1	14x1,50B	R
	05.07-10.14	6x15	**740,-**	5060501	V0515025	8000	5-100	43	57,1	14x1,50B	R
Fabia - 2.0i 15"	01.00-04.07	5x14	**584,-**	5050401	V0514015	5210	5-100	35	57,1	14x1,50B	R
1.9TDi RS (96kW) 15"	01.00-04.07	6x14	**676,-**	5060404	V0514016	7280	5-100	43	57,1	14x1,50B	R
	01.00-04.07	6x15	**740,-**	5060501	V0515025	8000	5-100	43	57,1	14x1,50B	R
	01.00-04.07	6,5x16	**992,-**	5065601	V0516005	9680	5-100	42	57,1	14x1,50B	R
Citigo (AA)	09.11-	5x14	**596,-**	5050403	V0514021	6795	4-100	35	57,1	12x1,50B	R
Subaru											
Trezia (D1)	03.11-	5,5x15	**724,-**	4955503	T0515017	7210	5-100	45	54,1	12x1,50	
Impreza (G4)	01.13-10.17	6x15	**700,-**	4760504	SB515005	8037	5-100	48	56,1	12x1,25	2
Suzuki											
SX4 (JY) s-cross	08.13-	6x16	**756,-**	4860602	SU516007	8183	5-114,3	50	60,1	12x1,50B	2
SX4 (EY)	06.06-11.13	6x15	**708,-**	4860501	SU515002	7150	5-114,3	50	60,1	12x1,50B	
Swift (MZ) Sport	03.07-08.10	6x15	**708,-**	4860501	SU515002	7150	5-114,3	50	60,1	12x1,50B	
Swift (MZ)	05.05-08.10	5x14	**564,-**	4850402	SU514006	5155	4-100	45	54,1	12x1,50B	
Swift -	03.89-08.03	4,5x13	**512,-**	4845301	SU513001	2755	4-114,3	45	60,1	12x1,25	2
Splash (EX)	04.08-09.14	5x14	**564,-**	4850402	SU514006	5155	4-100	45	54,1	12x1,50B	
Ignis (MF)	12.16-	5x15	**828,-**	4850503	SU515006	4035	4-100	40	54,1	12x1,25	
Grand Vitara (JT)	12.05-	6,5x16	**1308,-**	4865601	SU516003	8295	5-114,3	45	60,1	12x1,25	
Toyota											
Yaris (XP9) 1.3, 1.4D-4D 15"	12.05-09.11	5,5x15	**788,-**	4955502	T0515011	7890	4-100	45	54,1	12x1,50	
Yaris (XP13) 1.33, 1.4D4-D, 1.5, Hybrid 15"	10.11-	5x15	**712,-**	4950502	T0515018	7615	4-100	39	54,1	12x1,50	
Verso S (XP12)	12.10-	5,5x15	**724,-**	4955503	T0515017	7210	5-100	45	54,1	12x1,50	
Verso (AR2) 2.2D-4D (110kW, 130kW) 17"	05.09-08.18	6,5x16	**1136,-**	4965608	T0516010	7625	5-114,3	39	60,1	12x1,50	
Proace Verso 2.0D-4D (130kW) 17"	09.16-	7x16	**1008,-**	3570608	R1-1980	PS616003	5-108	46	65,1	12x1,25B	
	09.16-	7x16	**1008,-**	3570607	PS616003	7505	5-108	46	65,1	12x1,25B	
Proace - 2.0D-4D (130kW) 17"	06.16-	7x16	**1008,-**	3570608	R1-1980	PS616003	5-108	46	65,1	12x1,25B	
	06.16-	7x16	**1008,-**	3570607	PS616003	7505	5-108	46	65,1	12x1,25B	
Proace -	05.13-05.16	7x16	**1060,-**	3570602	PS616001	7780	5-108	42	65,1	12x1,25B	
	05.13-05.16	7x16	**1016,-**	3570609	R1-1675	PS616001	5-108	42	65,1	12x1,25B	
Prius (XW4) Plus	06.12-	6,5x16	**1136,-**	4965608	T0516010	7625	5-114,3	39	60,1	12x1,50	
Prius (XW3)	08.09-01.16	6x16	**924,-**	4960603	T0516014	7911	5-100	45	54,1	12x1,50	
Aygo (AB1)	07.14-	4,5x14	**744,-**	4945402	T0514021	5770	4-100	35	54,1	12x1,50B	
Aygo (AB1)	07.05-06.14	4,5x14	**632,-**	4945401	T0514017	4940	4-100	39	54,1	12x1,50B	
Avensis (T27) 2.0D-4D (105kW) 17"	05.15-	6,5x16	**1136,-**	4965608	T0516010	7625	5-114,3	39	60,1	12x1,50	
Avensis (T27) 2.2D-4D (110kW, 130kW) 17"	01.09-04.15	6,5x16	**1136,-**	4965608	T0516010	7625	5-114,3	39	60,1	12x1,50	
Auris (E15) Hybrid comfort 16"	12.12-	6x15	**896,-**	4960510	T0515014	7580	5-114,3	39	60,1	12x1,50	
	12.12-	6,5x16	**1128,-**	4965610	R1-1862	T0516012	5-114,3	45	60,1	12x1,50	
Auris - (15" Kun 1.4D-4D & 1.8 Hybrid) 2.2D-4D 17"	03.07-11.12	6,5x16	**1024,-**	4965607	T0516009	7865	5-114,3	45	60,1	12x1,50	
Trailer											
Trailer 6-bolt	-	6x14	**880,-**	5360402	RP514008		6-205	-5	161,0		Maks bel. 1250kg
Trailer 5-bolt	-	4,5x13	**424,-**	5345303	RP513003	X	5-112	30	63,1	12x1,50B	
	-	4,5x13	**424,-**	5345306	615070		5-112	33	67,1	12x1,50B	
	-	5x13	**424,-**	5350302	615250		5-112	30	66,6	12x1,50B	
	-	6x13	**532,-**	5360302	615271		5-112	30	67,1	12x1,50B	
	-	5,5x14	**500,-**	5355402	615300		5-112	30	66,6	12x1,50B	
	-	6x14	**652,-**	5360401	RP514007		5-112	30	66,5	12x1,50B	
	-	6x15	**596,-**	5360501	615440		5-112	30	66,6	12x1,50B	
	-	6x16	**948,-**	5360601	RP516001		5-112	30	66,5	12x1,50B	
Trailer 4-bolt	-	4x13	**424,-**	5340301	615040		4-100	30	57,1	12x1,50B	
	-	4,5x13	**424,-**	5345301	615250		4-100	30	57,1	12x1,50B	
	-	5,5x14	**500,-**	5355401	615290		4-100	30	57,1	12x1,50B	
Caravan 5-bolt	-	4,5x13	**424,-**	5345306	615070		5-112	33	67,1	12x1,50B	
	-	4,5x13	**424,-**	5345303	RP513003	X	5-112	30	63,1	12x1,50B	
	-	5x13	**424,-**	5350302	615250		5-112	30	66,6	12x1,50B	
	-	6x13	**532,-**	5360302	615271		5-112	30	67,1	12x1,50B	
	-	5,5x14	**500,-**	5355402	615300		5-112	30	66,6	12x1,50B	
	-	6x14	**652,-**	5360401	RP514007		5-112	30	66,5	12x1,50B	
	-	6x15	**596,-**	5360501	615440		5-112	30	66,6	12x1,50B	
	-	6x16	**948,-**	5360601	RP516001		5-112	30	66,5	12x1,50B	
Caravan 4-bolt	-	4x13	**424,-**	5340301	615040		4-100	30	57,1	12x1,50B	
	-	4,5x13	**424,-**	5345301	615250		4-100	30	57,1	12x1,50B	
	-	5,5x14	**500,-**	5355401	615290		4-100	30	57,1	12x1,50B	

Bilmerke - Bilmodell	Årsmodell	Felgdim.	Veil. Pris eks. MVA	Varenummer	KpZ Varenummer	Alt nr	PCD	ET	CB	Bolt - Mutter	Merknader
Volkswagen											
Up (AA)	09.11-	5x14	**596,-**	5050403	V0514021	6795	4-100	35	57,1	12x1,50B	R
T-Roc (A1)	12.17-	6,5x16	**860,-**	5065617	V0516039	6665	5-112	43	57,1	14x1,50B	
Touran (1T) Facelift 1.4TSI (110/125kW) 16"	09.10-08.15	6x15	**664,-**	5060509	V0515024	9165	5-112	47	57,1	14x1,50B	R
2.0TDI (103/125kW) 16"	09.10-08.15	6x16	**820,-**	0360603	AD516012	9535	5-112	50	57,1	14x1,50B	R
	09.10-08.15	6,5x16	**804,-**	5065603	V0516015	9915	5-112	50	57,1	14x1,50B	R
Touran (1T)	09.15-	6,5x16	**920,-**	5065616	V0516038		5-112	48	57,1	14x1,50B	R
Touran (1T) 2.0TDi (125kW) 16"	03.03-08.10	6x15	**664,-**	5060509	V0515024	9165	5-112	47	57,1	14x1,50B	R
	03.03-08.10	6x16	**820,-**	0360603	AD516012	9535	5-112	50	57,1	14x1,50B	R
	03.03-08.10	6,5x16	**804,-**	5065603	V0516015	9915	5-112	50	57,1	14x1,50B	R
Tiguan (5N)	10.07-02.16	6,5x16	**948,-**	5065608	V0516028	9922	5-112	33	57,1	14x1,50B	R
T-Cross (C1)	03.19-	6x16	**912,-**	5060608	V0516041		5-100	35	57,1	14x1,50B	
T6 Transporter 2.0TSI (150kW) 17"	08.15-	6,5x16	**904,-**	5065607	V0616016	9685	5-120	51	65,1	14x1,50B	R
2.0TDI (150kW) 17"	08.15-	7x17	**1788,-**	5070701	V0617001	9215	5-120	55	65,1	14x1,50B	R
	08.15-	7x17	**1788,-**	5070702	R1-1614	V0617001	5-120	55	65,1	14x1,50B	
T5 Transporter 2.0BiTDI (132kW), 2.0TSI (150kW) 17"	11.09-07.15	6,5x16	**904,-**	5065607	V0616016	9685	5-120	51	65,1	14x1,50B	R
	11.09-07.15	6,5x16	**992,-**	5065612	V0616025		5-120	51	65,1	14x1,50B	R
	11.09-07.15	7x17	**1788,-**	5070701	V0617001	9215	5-120	55	65,1	14x1,50B	R
	11.09-07.15	7x17	**1788,-**	5070702	R1-1614	V0617001	5-120	55	65,1	14x1,50B	
T5 Transporter 3.2 (173kW) 17"	05.03-10.09	6,5x16	**904,-**	5065607	V0616016	9685	5-120	51	65,1	14x1,50B	R
bultlängd 35-40mm alla T5	05.03-10.09	7x17	**1788,-**	5070701	V0617001	9215	5-120	55	65,1	14x1,50B	R
	05.03-10.09	7x17	**1788,-**	5070702	R1-1614	V0617001	5-120	55	65,1	14x1,50B	
Sharan (7N)	05.10-	6,5x16	**1020,-**	5065610	V0516031		5-112	33	57,1	14x1,50B	R
Polo (AW) 1.0 66kW, 1.0TGI 15"	09.17-	5x14	**596,-**	5050404	V0514022	3055	5-100	38	57,1	14x1,50B	
1.6TDI 15"	09.17-	5,5x15	**672,-**	5055501	V0515032	4055	5-100	40	57,1	14x1,50B	
Polo (9N) GTI 06- 15"	11.01-08.09	5x14	**584,-**	5050401	V0514015	5210	5-100	35	57,1	14x1,50B	R
	11.01-08.09	6x14	**676,-**	5060404	V0514016	7280	5-100	43	57,1	14x1,50B	R
	11.01-08.09	6x15	**740,-**	5060506	V0515011	8380	5-100	38	57,1	14x1,50B	R
Polo (6R) 1.2TSI (77kW), 1.6TDI (77kW) 15"	09.09-08.17	5x14	**584,-**	5050401	V0514015	5210	5-100	35	57,1	14x1,50B	R
GTI 15"	09.09-08.17	6x15	**676,-**	5060512	V0515030	7760	5-100	37	57,1	14x1,50B	R
	09.09-08.17	6x16	**656,-**	5060605	V0516036	X	5-100	40	57,1	14x1,50B	Polo GTI 13-
Passat (3C) variant GTE Hybrid, 2.0TDI (176kW) 17"	10.14-	6,5x16	**836,-**	5065615	V0516037	8426	5-112	41	57,1	14x1,50B	R
2.0TSI (206kW) 17"											
Passat (3C) sedan GTE Hybrid, 2.0TDI (176kW) 17"	10.14-	6,5x16	**836,-**	5065615	V0516037	8426	5-112	41	57,1	14x1,50B	R
2.0TSI (206kW) 17"											
LT 28/35	01.00-05.06	6x15	**996,-**	2860506	ME615016	8555	5-130	75	84,0	14x1,50B	R
LT 28	08.96-12.99	6x15	**996,-**	2860506	ME615016	8555	5-130	75	84,0	14x1,50B	1, R
Jetta (1KM) 1.8TSI, 2.0TDi (125kW) 16"	08.05-03.11	6x15	**664,-**	5060509	V0515024	9165	5-112	47	57,1	14x1,50B	R
2.0TFSI (147kW) 16"	08.05-03.11	6x16	**820,-**	0360603	AD516012	9535	5-112	50	57,1	14x1,50B	Även 2,0TFSI
	08.05-03.11	6,5x16	**804,-**	5065603	V0516015	9915	5-112	50	57,1	14x1,50B	R
Jetta (16H) 1.4TSI (118kW) 16"	03.11-01.18	6x16	**820,-**	0360603	AD516012	9535	5-112	50	57,1	14x1,50B	R
	03.11-01.18	6,5x16	**804,-**	5065603	V0516015	9915	5-112	50	57,1	14x1,50B	R
	03.11-01.18	6,5x16	**1004,-**	5065611	V0516033	9173	5-112	44	57,1	14x1,50B	R
Golf (AUV) sportsvan	04.14-	6x15	**672,-**	5060514	V0515031	7755	5-112	43	57,1	14x1,50B	R
	04.14-	6x16	**836,-**	5060604	V0516034	8247	5-112	48	57,1	14x1,50B	R
	04.14-	6,5x16	**776,-**	5065614	V0516035	8667	5-112	46	57,1	14x1,50B	R
Golf (AU) VII variant 1.4TSI (103kW) 16"	08.13-	6x15	**672,-**	5060514	V0515031	7755	5-112	43	57,1	14x1,50B	R
2.0TDI (110kW) 16"	08.13-	6x16	**836,-**	5060604	V0516034	8247	5-112	48	57,1	14x1,50B	R
	08.13-	6,5x16	**776,-**	5065614	V0516035	8667	5-112	46	57,1	14x1,50B	R
Golf (AU) VII 1.4TSI (103kW), 2.0TDI (110kW) 16"	11.12-	6x15	**672,-**	5060514	V0515031	7755	5-112	43	57,1	14x1,50B	R
GTD 16", GTI 17"	11.12-	6x16	**836,-**	5060604	V0516034	8247	5-112	48	57,1	14x1,50B	R
	11.12-	6,5x16	**776,-**	5065614	V0516035	8667	5-112	46	57,1	14x1,50B	R
Golf (1KP) VI plus 1.4TSI (118kW) 16"	09.09-03.14	6x15	**664,-**	5060509	V0515024	9165	5-112	47	57,1	14x1,50B	R
2.0TDI (125kW) 16"	09.09-03.14	6,5x16	**804,-**	5065603	V0516015	9915	5-112	50	57,1	14x1,50B	R
Golf (1KP) V plus	02.05-08.09	6x15	**664,-**	5060509	V0515024	9165	5-112	47	57,1	14x1,50B	R
	02.05-08.09	6x16	**820,-**	0360603	AD516012	9535	5-112	50	57,1	14x1,50B	R
	02.05-08.09	6,5x16	**804,-**	5065603	V0516015	9915	5-112	50	57,1	14x1,50B	R
Golf (1KM) VI variant 1.4TSI, 2.0TDI 16"	09.09-07.13	6x15	**664,-**	5060509	V0515024	9165	5-112	47	57,1	14x1,50B	R
	09.09-07.13	6,5x16	**804,-**	5065603	V0516015	9915	5-112	50	57,1	14x1,50B	R
Golf (1KM) V variant	06.07-08.09	6x15	**664,-**	5060509	V0515024	9165	5-112	47	57,1	14x1,50B	R
	06.07-08.09	6x16	**820,-**	0360603	AD516012	9535	5-112	50	57,1	14x1,50B	R
	06.07-08.09	6,5x16	**804,-**	5065603	V0516015	9915	5-112	50	57,1	14x1,50B	R
Golf (1K) VI 1.4 TSI (118kW) 16"	10.08-10.12	6x15	**664,-**	5060509	V0515024	9165	5-112	47	57,1	14x1,50B	R
GTI/GTD 16"	10.08-10.12	6x16	**820,-**	0360603	AD516012	9535	5-112	50	57,1	14x1,50B	R
	10.08-10.12	6,5x16	**804,-**	5065603	V0516015	9915	5-112	50	57,1	14x1,50B	R
Golf (1K) V GTI	12.04-09.08	6x16	**820,-**	0360603	AD516012	9535	5-112	50	57,1	14x1,50B	R
Golf (1K) V 2.0TDi (125kW) 16"	10.03-09.08	6x15	**664,-**	5060509	V0515024	9165	5-112	47	57,1	14x1,50B	R
GT 16"	10.03-09.08	6x16	**820,-**	0360603	AD516012	9535	5-112	50	57,1	14x1,50B	R
	10.03-09.08	6,5x16	**804,-**	5065603	V0516015	9915	5-112	50	57,1	14x1,50B	R
Golf (1J) IV variant	07.99-05.07	6x15	**740,-**	5060506	V0515011	8380	5-100	38	57,1	14x1,50B	R
	07.99-05.07	6,5x16	**992,-**	5065601	V0516005	9680	5-100	42	57,1	14x1,50B	R
Golf (1J) IV 1.8i, 1.8T, 1.9TDi 15"	10.97-09.03	6x15	**740,-**	5060506	V0515011	8380	5-100	38	57,1	14x1,50B	R
2.0i, 2.3 V5 15"	10.97-09.03	6,5x16	**992,-**	5065601	V0516005	9680	5-100	42	57,1	14x1,50B	R
Fox (5Z)	04.05-04.11	5x14	**584,-**	5050401	V0514015	5210	5-100	35	57,1	14x1,50B	R
	04.05-04.11	6x14	**676,-**	5060404	V0514016	7280	5-100	43	57,1	14x1,50B	R
Cross Up (AA)	10.13-	5x14	**596,-**	5050403	V0514021	6795	4-100	35	57,1	12x1,50 B	
Cross Touran (1T)	04.07-08.15	6x16	**820,-**	0360603	AD516012	9535	5-112	50	57,1	14x1,50B	R
Cross Polo (9N)	02.06-08.09	6x15	**740,-**	5060506	V0515011	8380	5-100	38	57,1	14x1,50B	R
Cross Golf (1KP) 1.4TSI (118kW), 2.0TDI 16"	06.10-10.12	6x15	**664,-**	5060509	V0515024	9165	5-112	47	57,1	14x1,50B	R
	06.10-10.12	6x16	**820,-**	0360603	AD516012	9535	5-112	50	57,1	14x1,50B	R
	06.10-10.12	6,5x16	**804,-**	5065603	V0516015	9915	5-112	50	57,1	14x1,50B	R

Forts. neste side »

Bilmerke - Bilmodell	Årsmodell	Felgdim.	**Veil. Pris eks. MVA**	Varenummer	KpZ Varenummer	Alt nr	PCD	ET	CB	Bolt - Mutter	Merknader
Volkswagen (forts.)											
Cross Golf -	03.07-08.09	6,5x16	**804,-**	5065603	V0516015	9915	5-112	50	57,1	14x1,50B	R
Crafter 46/50 (Dobbelmontage)	07.13-02.17	5,5x16	**1416,-**	2855602	ME616036		6-205	110	161,0		R
Crafter 46/50 (Dobbelmontage)	06.06-06.13	5,5x16	**1416,-**	2855602	ME616036		6-205	110	161,0		
Crafter 30/35	07.13-02.17	5,5x16	**1088,-**	2855605	R1-1673	ME616037	6-130	51	84,1	14x1,50B	
	07.13-02.17	6,5x16	**1004,-**	2865602	ME616013	9487	6-130	62	84,0	14x1,50B	R
Crafter 30/35	06.06-06.13	5,5x16	**1088,-**	2855605	R1-1673	ME616037	6-130	51	84,1	14x1,50B	
	06.06-06.13	6,5x16	**1004,-**	2865602	ME616013	9487	6-130	62	84,0	14x1,50B	R
Crafter (SYN1E) 30/35	03.17-	6,5x16	**1228,-**	5065619	R1-2016	V0616031	5-120	60	65,1	14x1,50B	
Crafter - (Dobbelmontage)	03.17-	5,5x16	**1908,-**	5055602	R1-2015	V0616030	6-205	114	161,0		
Caddy (2KN) Maxi 2.0TDI (110kW) 16"	03.16-	6x15	**768,-**	5060513	V0615036	8385	5-112	47	57,1	14x1,50B	
	03.16-	6x16	**868,-**	5060603	V0616021	9702	5-112	50	57,1	14x1,50B	R
Caddy (2KN) 2.0TDI (110kW) 16"	06.15-	6x15	**768,-**	5060513	V0615036	8385	5-112	47	57,1	14x1,50B	R
	06.15-	6x16	**868,-**	5060603	V0616021	9702	5-112	50	57,1	14x1,50B	R
Caddy - 2.0 Naturgas (80kW) 16"	01.04-05.15	6x15	**768,-**	5060513	V0615036	8385	5-112	47	57,1	14x1,50B	R
2.0TDI (103kW) 16"	01.04-05.15	6x16	**868,-**	5060603	V0616021	9702	5-112	50	57,1	14x1,50B	R
Bora - 1.8i, 1.9TDi (74, 81, 85kW) 15"	10.98-07.05	6x15	**740,-**	5060506	V0515011	8380	5-100	38	57,1	14x1,50B	R
2.0i, 2.3 V5 15"	10.98-07.05	6,5x16	**992,-**	5065601	V0516005	9680	5-100	42	57,1	14x1,50B	R
Beetle (16)	10.11-07.19	6,5x16	**1004,-**	5065611	V0516033	9173	5-112	44	57,1	14x1,50B	R
Beetle - 3.2 RSI 17"	10.98-09.11	6x15	**740,-**	5060506	V0515011	8380	5-100	38	57,1	14x1,50B	R
	10.98-09.11	6,5x16	**992,-**	5065601	V0516005	9680	5-100	42	57,1	14x1,50B	R
Amarok (2H) 2.0BiTDI (132kW) 17"	06.10-09.16	6,5x16	**1052,-**	5065613	V0616024		5-120	52	65,1	14x1,50B	R
Volvo											
XC70 (B) T6 17"	06.07-05.16	7x16	**1124,-**	5170603	W516005	8275	5-108	50	63,3	14x1,50B	
V70 (B) T6 17"	06.07-04.16	7x16	**1124,-**	5170603	W516005	8275	5-108	50	63,3	14x1,50B	
V60 (F) Cross Country	05.15-09.18	7x16	**1124,-**	5170603	W516005	8275	5-108	50	63,3	14x1,50B	
V60 (F) T6, Hybrid 17"	11.10-09.18	7x16	**1124,-**	5170603	W516005	8275	5-108	50	63,3	14x1,50B	
V50 (M) 2.0, 2.0D, 2.4, 2.4i, D5, T5 16"	04.04-04.12	6,5x16	**776,-**	5165603	W516004	9225	5-108	52	63,3	12x1,50	
V40 (M) Cross Country	10.12-06.19	6,5x16	**776,-**	5165603	W516004	9225	5-108	52	63,3	12x1,50	
V40 (M) D3, D4, T2, T3, T4, T5 16"	05.12-06.19	6,5x16	**776,-**	5165603	W516004	9225	5-108	52	63,3	12x1,50	
S80 (A) T6, V8 17"	05.06-05.16	7x16	**1124,-**	5170603	W516005	8275	5-108	50	63,3	14x1,50B	
S60 (F) Cross Country	05.15-11.18	7x16	**1124,-**	5170603	W516005	8275	5-108	50	63,3	14x1,50B	
S60 (F) T6 17"	06.10-11.18	7x16	**1124,-**	5170603	W516005	8275	5-108	50	63,3	14x1,50B	
S40 (M) 2.0, 2.0D, 2.4, 2.4i, D5, T5 16"	01.04-04.12	6,5x16	**776,-**	5165603	W516004	9225	5-108	52	63,3	12x1,50	
C30 (M) 2.0, 2.0D, 2.4i, D5, T5 16"	12.06-12.12	6,5x16	**776,-**	5165603	W516004	9225	5-108	52	63,3	12x1,50	


NITRO
WHEELS
NITRO
TESLA.COM

Last, buss og henger

Felgdim.	Kode	Beteg-nelse	Vare-num-mer	Overflate	Veil. pris/ stk eks. MVA	Antall bolt-hull Bolt-sirk. PCD	Bolt-hull Ø (mm)	Inpr. ET (mm)	ABE num-mer (Tysk-land)	Maks. bel. (kg)	Felg-vekt (kg)	Navhull CB mm	God-styk-kelse (mm)	HMA (mm)	Tvil-ling	Ventil
6.75x17.5 6 hole	SLT 2901	2901AM	700675 175201	Maskinert	5 296 kr	6-245	26	125	KBA 49488	2 500	14,9	202	21,0	146	Yes	SLT-003
		2901 APH	700675 175101	Polert innv./ utv.	6 192 kr		26									
6.75x17.5 8 hole	SLT 2911	2911AM	700675 175211	Maskinert	5 296 kr	8-275	24	125	KBA 49855	2 500	14,4	221	21,0	146	Yes	SLT-003
		2911 APH	700675 175111	Polert innv./ utv.	6 192 kr		24									
		2911 BM	700675 175221	Maskinert	5 296 kr		30									
		2911 BPH	700675 175121	Polert innv./ utv.	6 192 kr		30									
6.75x17.5 10 hole	SLT 3086	3086 AM	700675 175231	Maskinert	5 296 kr	10-225	26	117	KBA 48650	3 000	14,6	176	22,0	139	Yes	SLT-004
7.50x19.5 8 hole	SLT 3087	3087 AM	700750 195201	Maskinert	4 896 kr	8-275	26	134	KBA 48984	3 150	18,0	221	21,0	155	Yes	SLT-020
		3087 BM	700750 195211	Maskinert	4 896 kr		32									
8.25x19.5 8 hole	SLT 4015	4015 CM	700825 19501	Maskinert	5 096 kr	8-275	26	145	KBA 51417	3150	18,8	221	21,0	167	Yes	SLT-003
		4015 AM	700825 19502	Maskinert	5 096 kr		30									
		4015 BM	700825 19503	Maskinert	5 096 kr		32									
14.00x19.5 10 hole	SLT 3598	3598 AM	701400 195201	Maskinert	6 800 kr	10-335	26	120	KBA 50537	4 500	22,9	281	28,0	~	No	SLT-021
		3598 BM	701400 195202	Maskinert	6 800 kr		32									
7.50x22.5	SLT 3211	3211 AM	700750 225201	Maskinert	5 888 kr	10-335	26	138	KBA 49688	3 750	24,0	281	23,5	162	Yes	SLT-022
		3211 BM	700750 225211	Maskinert	5 888 kr		32									
8.25x22.5	SLT 2900	2900 AM	700825 225201	Maskinert	5 888 kr	10-335	26	146	KBA 48829	3 750	23,3	281	20,5	166,5	Yes	SLT-003
		2900 APH	700825 225101	Polert innv./ utv.	6 956 kr		26									
		2900 BM	700825 225211	Maskinert	5 888 kr		32									
		2900 BPH	700825 225111	Polert innv./ utv.	6 956 kr		32									
9.00x22.5	SLT 2887	2887 AM	700900 225201	Maskinert	5 888 kr	10-335	26	151	KBA 48286	4 250	25,6	281	23,5	174	Yes	SLT-022
		2887 APH	700900 225101	Polert innv./ utv.	6 956 kr		26									
		2887 BM	700900 225211	Maskinert	5 888 kr		32									
		2887 BPH	700900 225111	Polert innv./ utv.	6 956 kr		32									

Last, buss og henger

Felgdim.	Kode	Beteg-nelse	Vare-num-mer	Overflate	Veil. pris/ stk eks. MVA	Antall bolt-hull Bolt-sirk. PCD	Bolt-hull Ø (mm)	Inpr. ET (mm)	ABE num-mer (Tysk-land)	Maks. bel. (kg)	Felg-vekt (kg)	Navhull CB mm	God-styk-kelse (mm)	HMA (mm)	Tvil-ling	Ventil
11.75x22.5 ET 0	SLT 3099	3099 AM	701175 225221	Maskinert	6 188 kr	10-335	26	0	KBA 49335	5 000	22,3	281	24,0	~	No	SLT-020
		3099 APT	701175 225121	Polert utv.	6 644 kr		26									
		3099 BM	701175 225231	Maskinert	5 884 kr		32									
		3099 BPT	701175 225131	Polert utv.	6 644 kr		32									
11.75x22.5 ET 45	SLT 3774	3774 AM	701175 225261	Maskinert	6 644 kr	10-335	26	45	KBA 50353	5 000	24	281	24,0	~	No	SLT-021
		3774 BM	701175 225271	Maskinert	6 644 kr		32									
11.75x22.5 ET 120	SLT 2888 / SLT 3018	3018 AM	701175 225202	Maskinert	6 188 kr	10-335	26	120	KBA 48285	5 000	25,5	281	26,0	~	No	SLT-021
		2888 APT	701175 225101	Polert utv.	6 948 kr		26									
		2888 BM	701175 225211	Maskinert	6 188 kr		32									
		2888 BPT	701175 225111	Polert utv.	6 948 kr		32									
13.00x22.5	SLT 3187	3187 AM	701300 225201	Maskinert	7 252 kr	10-335	26	-14	KBA 49687	5 800	27,9	281	28,0	~	No	SLT-020
		3187 BM	701300 225202	Maskinert	7 252 kr		32									
9.00x22.5 Design	SLT 2907	2907 AM	700900 225401	Maskinert	6 040 kr	10-335	26	153	KBA 49856	4 250	23,7	281	22,0	175	Yes	SLT-003
		2907 APH	700900 225301	Polert innv./ utv.	7 092 kr		26									
		2907 BM	700900 225411	Maskinert	6 040 kr		32									
		2907 BPH	700900 225311	Polert innv./ utv.	7 092 kr		32									
11.75x22.5 ET 120 Design	SLT 2898	2898 AM	701175 225401	Maskinert	6 188 kr	10-335	26	120	KBA 48898	5 000	24,2	281	25,0	~	No	SLT-021
		2898 APT	701175 225301	Polert utv.	6 948 kr		26									
		2898 BM	701175 225411	Maskinert	6 188 kr		32									
		2898 BPT	701175 225311	Polert utv.	6 948 kr		32									
11.75x22.5 ET 135 Design	SLT 3063	3063 AM	701175 225441	Maskinert	6 188 kr	10-335	26	135	KBA 48899	5 000	26,0	281	25,0	~	No	SLT-021
		3063 APT	701175 225341	Polert utv.	6 948 kr		26									
		3063 BM	701175 225451	Maskinert	6 188 kr		32									
		3063 BPT	701175 225351	Polert utv.	6 948 kr		32									

Stålfelger til lastebil, buss og henger

Felgdim.	Varenummer	Lev.-art.nr	Veil. Pris eks. MVA	PCD	CB (mm)	ET (mm)	Bolthull	Bolt/nav sentr.	Ventil	Maks. bel. (kg)	Antall/ pall	Anm.
6,00x17,5	600 600 175 10	14020V*	1 536 kr	6-205	161	116	Kona	(MZ)	Std	1550	20	
6,00x17,5	600 600 175 11	35038V*	1 536 kr	6-245	202	114,5	Rak M18	MZ	ALV	1850	20	
6,00x17,5	600 600 175 09	14008V*	1 536 kr	6-245	202	121,5	Rak M18	MZ	ALV	1850	20	
6,00x17,5	600 600 175 06	14014V*	1 536 kr	6-245	191	121,5	Rak M20	MZ	ALV	1850	20	
6,00x17,5	600 600 175 05	14015V*	1 536 kr	10-225	176	122,5	Kona	(MZ)	Std	3150	20	
6,75x17,5	600 675 175 03	14019V*	1 596 kr	6-205	161	0	Kona	(MZ)	ALV	2725	20	
6,75x17,5	600 675 175 10	35037V*	1 596 kr	6-245	202	128	Rak M18	MZ	ALV	2240	20	
6,75x17,5	600 675 175 12	14009V*	1 596 kr	6-245	202	145	Rak M18	MZ	ALV	2360	20	
6,75x17,5	600 675 175 11	14007V*	1 596 kr	8-275	221	135	Rak M20	MZ	ALV	2360	20	
6,75x17,5	600 675 175 05	14017V*	1 596 kr	10-225	176	128	Kona	(MZ)	Std	3150	20	
6,75x19,5	600 675 195 04	35367V*	2 244 kr	8-275	221	133	Kona	(MZ)	ALV	2500	16	U DCW-G3
6,75x19,5	600 675 195 05	35366V*	2 244 kr	8-275	221	133	Rak M20	MZ	ALV	2500	16	U DCW-G3
6,75x19,5	600 675 195 03	11085**	2 496 kr	10-225	221	127	Kona	(MZ)	Std	2500	16	
7,50x19,5	600 750 195 07	35368V*	1 868 kr	8-275	221	138	Rak M22	MZ	ALV	2800	16	U DCW-G3
7,50x19,5	600 750 195 04	35370V*	1 868 kr	8-275	221	144	Kona	(MZ)	ALV	3000	16	U DCW-G3
7,50x19,5	600 750 195 05	35369V*	1 868 kr	8-275	221	144	Rak M20	MZ	ALV	3000	16	U DCW-G3
7,50x19,5	600 750 195 08	11054**	1 868 kr	10-225	176	0	Kona	(MZ)	ALV	2725	16	
7,50x19,5	600 750 195 10	35552V*	1 868 kr	10-225	176	140	Kona	(MZ)	Std	2725	16	U DCW-G3
8,25x19,5	600 825 195 04	35554V*	2 080 kr	8-275	221	0	Kona	BZ	ALV	3800	16	U DCW-G3
8,25x19,5	600 825 195 08	35371V*	2 080 kr	8-275	221	157	Rak M20	MZ	ALV	3150	16	U DCW-G3
8,25x19,5	600 825 195 09	35555V*	2 080 kr	8-275	221	65	Rak	MZ	Std	3150	16	U DCW-G3
8,25x19,5	600 825 195 01	819BC**	2 080 kr	10-225	176	REV	Kona	(MZ)	ALV	3150	16	
8,25x19,5	600 825 195 06	35553V*	2 080 kr	10-225	176	66	Rak M22	MZ	ALV	3750	16	U DCW-G3
8,25x19,5	600 825 195 03	35503V*	2 080 kr	10-225	176	148	-	(MZ)	Std	3150	16	U DCW-G3
11,75x19,5	60 1175 195 01	35423V*	2 796 kr	8-275	221	0	Rak M22	MZ	ALV	4500	12	
11,75x19,5	60 1175 195 02	35421V*	2 796 kr	10-335	281	0	Rak M22	MZ	ALV	4500	12	
11,75x19,5	60 1175 195 03	35422V*	2 796 kr	10-335	281	120	Rak M22	MZ	ALV	4500	12	
14,00x19,5	60 1400 195 04	35426V*	2 796 kr	8-275	221	0	Rak M22	MZ	ALV	4500	8	
14,00x19,5	60 1400 195 05	35424V*	2 796 kr	10-335	281	0	Rak M22	MZ	ALV	4500	8	
14,00x19,5	60 1400 195 06	35425V*	2 796 kr	10-335	281	120	Rak M22	MZ	ALV	4500	8	
6,75x22,5	600 675 225 03	15130V*	2 824 kr	8-275	221	132	Rak M20	MZ	Std	2800	12	
6,75x22,5	600 675 225 02	11039**	2 824 kr	10-335	281	129	Rak M22	MZ	Std	2800	12	
7,50x22,5	600 750 225 01	15014**	2 496 kr	8-275	221	141,5	Rak M20	MZ	ALV	3150	12	
7,50x22,5	600 750 225 10	15096V*	2 080 kr	8-275	221	141,5	Rak M20	MZ	ALV	3150	12	
7,50x22,5	600 750 225 02	15124V*	2 160 kr	8-275	221	147	Rak M20	MZ	ALV	3250	12	U DCW-G3
7,50x22,5	600 750 225 12	15121V*	2 080 kr	10-335	281	148	Rak M22	MZ	ALV	3750	12	U DCW-G3
7,50x22,5	600 750 225 15	15107V*	2 160 kr	10-335	281	152,5	Rak M22	MZ	ALV	3250	12	U DCW-G3
7,50x22,5	600 750 225 14	15123V*	2 080 kr	10-335	281	88	Rak M22	MZ	ALV	3550	12	U DCW-G3
8,25x22,5	600 825 225 12	15098V*	2 084 kr	10-335	281	152	Rak M22	MZ	ALV	3750	12	U DCW-G3
8,25x22,5	600 825 225 05	15024**	2 460 kr	10-335	281	152	Rak M22	MZ	ALV	3550	12	
8,25x22,5	600 825 225 06	15025**	2 160 kr	10-335	281	152	Kona	BZ	ALV	3550	12	
8,25x22,5	600 825 225 02	15119V*	2 084 kr	10-335	281	157	Rak M22	MZ	ALV	3750	12	U DCW-G3
9,00x22,5	600 900 225 10	15099V*	1 916 kr	10-335	281	162,5	Rak M22	MZ	ALV	4000	12	U DCW-G3
9,00x22,5	600 900 225 09	35470V*	2 092 kr	10-335	281	120	Rak M22	MZ	Std	4000	12	U DCW-G3

Stålfelger til lastebil, buss og henger

Felgdim.	Varenummer	Lev.-art.nr	Veil. Pris eks. MVA	PCD	CB (mm)	ET (mm)	Bolthull	Bolt/nav sentr.	Ventil	Maks. bel. (kg)	Antall/ pall	Anm.
11,75x22,5	60 1175 225 07	35054V	2 196 kr	10-335	281	0	Kona	(MZ)	ALV	5000	12	
11,75x22,5	60 1175 225 15	15084V*	2 044 kr	10-335	281	0	Rak M22	MZ	ALV	5000	12	
11,75x22,5	60 1175 225 24	15122V*	2 196 kr	10-335	281	45	Rak M22	MZ	ALV	5000	12	
11,75x22,5	60 1175 225 21	35511V*	2 196 kr	10-335	281	REV	Rak M22	MZ	ALV	5000	12	
11,75x22,5	60 1175 225 06	15083V*	2 044 kr	10-335	281	120	Rak M22	MZ	ALV	5000	12	
11,75x22,5	60 1175 225 11	15073V*	2 176 kr	10-335	281	135	Rak M22	MZ	ALV	5000	12	
11,75x22,5	60 1175 225 13	15125V*	2 252 kr	10-335	281	140	Rak M22	MZ	ALV	3550	12	
11,75x22,5	60 1175 225 18	15126V*	2 252 kr	10-335	281	160	Rak	MZ	Std	4750	12	
13,00x22,5	60 1300 225 01	35526V*	3 592 kr	10-335	281	120	Rak M22	MZ	ALV	5150	8	
13,00x22,5	60 1300 225 02	35527V*	3 592 kr	10-335	281	0	Rak M22	MZ	ALV	5150	8	
15,00x22,5	60 1500 225 02	14003V*	3 880 kr	10-335	281	120	Rak M22	MZ	ALV	5300	8	
15,00x22,5	60 1500 225 03	35055**	3 880 kr	10-335	281	25	Rak M22	MZ	ALV	5300	8	
15,00x22,5	60 1500 225 06	11108V*	3 880 kr	10-335	281	0	Rak M22	MZ	ALV	5300	8	
15,00x22,5	60 1500 225 05	11169**	3 880 kr	10-335	281	-35	Rak M22	MZ	ALV	5300	8	

Dette er storselgerne!

V* = Ventilen er montert i felgen.
MZ = Navsentrert felg med rette bolthull. Bruk kun mutter med fl ate skive.
BZ = Boltsentrert felg med koniske bolthull på yttersiden og i noen tilfeller også på innsiden.
(MZ) = Disse felgene kan benyttes både som midtsentrert og/eller som navsentrert.
Disse felgene kan monteres med både fl ate og koniske muttere.
ALV = Ausliggendes Ventil - OBS Disse felgene har ventilen montert utenfor felgdisken.
De er tilpasset biler med skivebremser, men kan også benyttes på biler med trommelbremser.

DCW-G3 - En ny generasjon lastebilfelger



Felg med sikkerhetshump



Felg i ny DCW-G3 utførelse

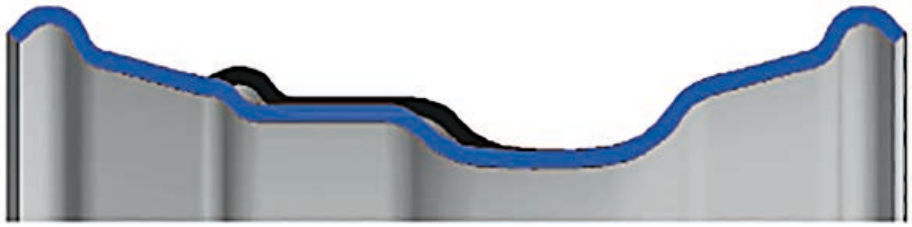

Tidligere (svart) / **Nå (blå)**

Her ser du forskjellen:
- Felgens nye utførelse gir redusert vekt som igjen gir større nyttelast
- Ingen hump - enklere av-/påmontering av dekk
- Felgen er laget for standard utenpåliggende ventil (ALV)
- Fullt ut forberedt for godkjente TPMSystemer (ECE-R64)
- Tilgjengelig i alle kurante dimensjoner
- Europeisk OE-kvalitet
- Patentert utvikling

Vi tar forbehold om trykk- og informasjonsfeil.

Prisliste Vinter 2020

Nr	Felgmodell	Dim.	Veil. pris eks. MVA
1	**Nitro Throne FF**	8,5x20	**5 060 kr**
	DIRECT HUB FITMENT · ORIGINAL NUT FITS · ORIGINAL BOLT FITS · FOR WINTER USE · LIGHT WEIGHT WHEEL · REAR CONCAVE DESIGN	9x20	**5 060 kr**
		10x20	**5 308 kr**
		10,5x20	**5 308 kr**
		9x22	**6 276 kr**
		9,5x22	**6 276 kr**
		10,5x22	**6 572 kr**
		11x22	**6 572 kr**
2	**Nitro Sapphire FF**	7,5x18	**3 944 kr**
	DIRECT HUB FITMENT · ORIGINAL NUT FITS · ORIGINAL BOLT FITS · ORIGINAL CAP FITS · FOR WINTER USE · LIGHT WEIGHT WHEEL	8x18	**4 036 kr**
		8,5x18	**4 036 kr**
		7,5x19	**4 572 kr**
		8x19	**4 684 kr**
		8,5x19	**4 684 kr**
		8x20	**5 096 kr**
		8,5x20	**5 216 kr**
		9x20	**5 216 kr**
3	**Nitro Turismo FF**	8x19	**4 492 kr**
	DIRECT HUB FITMENT · ORIGINAL NUT FITS · ORIGINAL BOLT FITS · ORIGINAL CAP FITS · FOR WINTER USE · LIGHT WEIGHT WHEEL · REAR CONCAVE DESIGN	8,5x19	**4 492 kr**
		9x19	**4 660 kr**
		9,5x19	**4 660 kr**
		10x19	**4 812 kr**
		10,5x19	**4 812 kr**
		8x20	**4 812 kr**
		8,5x20	**4 812 kr**
		9x20	**4 960 kr**
		9,5x20	**4 960 kr**
		10x20	**5 116 kr**
		10,5x20	**5 116 kr**
		11x20	**5 296 kr**
		11,5x20	**5 296 kr**
4	**Nitro Turismo FF G.Gun/Pol**	8x19	**4 644 kr**
	DIRECT HUB FITMENT · ORIGINAL NUT FITS · ORIGINAL BOLT FITS · ORIGINAL CAP FITS · FOR WINTER USE · LIGHT WEIGHT WHEEL · REAR CONCAVE DESIGN	8,5x19	**4 644 kr**
		9x19	**4 812 kr**
		9,5x19	**4 812 kr**
		10x19	**4 964 kr**
		10,5x19	**4 964 kr**
		8x20	**4 964 kr**
		8,5x20	**4 964 kr**
		9x20	**5 048 kr**
		9,5x20	**5 048 kr**
		10x20	**5 288 kr**
		10,5x20	**5 288 kr**
		11x20	**5 416 kr**
		11,5x20	**5 416 kr**

Nr	Felgmodell	Dim.	Veil. pris eks. MVA
5	**Nitro Volcano G.Gun**	8,5x19	**4 388 kr**
	DIRECT HUB FITMENT · ORIGINAL NUT FITS · ORIGINAL BOLT FITS · ORIGINAL CAP FITS · FOR WINTER USE · REAR CONCAVE DESIGN	9,5x19	**4 388 kr**
		8,5x20	**4 824 kr**
		9x20	**4 824 kr**
		9,5x20	**4 824 kr**
		10,5x20	**4 824 kr**
		9x21	**5 540 kr**
		9,5x21	**5 540 kr**
		10,5x21	**5 540 kr**
6	**Nitro Volcano**	8,5x19	**4 632 kr**
	DIRECT HUB FITMENT · ORIGINAL NUT FITS · ORIGINAL BOLT FITS · ORIGINAL CAP FITS · FOR WINTER USE · REAR CONCAVE DESIGN	9,5x19	**4 632 kr**
		8,5x20	**5 164 kr**
		9x20	**5 164 kr**
		9,5x20	**5 164 kr**
		10,5x20	**5 164 kr**
		9x21	**5 996 kr**
		9,5x21	**5 996 kr**
		10,5x21	**5 996 kr**
7	**Nitro Spark G.Blk/Grey**	8x18	**3 476 kr**
	DIRECT HUB FITMENT · ORIGINAL NUT FITS · ORIGINAL BOLT FITS · ORIGINAL CAP FITS · FOR WINTER USE	8,5x20	**4 660 kr**
8	**Nitro Spark G.Blk/Red**	8x18	**3 476 kr**
	DIRECT HUB FITMENT · ORIGINAL NUT FITS · ORIGINAL BOLT FITS · ORIGINAL CAP FITS · FOR WINTER USE	8,5x20	**4 660 kr**
9	**Nitro Sabre G.Blk**	7,5x17	**3 052 kr**
	DIRECT HUB FITMENT · ORIGINAL NUT FITS · ORIGINAL BOLT FITS · ORIGINAL CAP FITS · FOR WINTER USE	8x17	**3 108 kr**
		8x18	**3 496 kr**
		8,5x19	**4 292 kr**
		8,5x20	**4 800 kr**
10	**Nitro Demon H.Slv**	8x18	**2 972 kr**
	* Forsterket 950 kg	8x19	**3 624 kr**
	Sluttselges	9x19*	**3 624 kr**
	DIRECT HUB FITMENT · ORIGINAL NUT FITS · ORIGINAL BOLT FITS · ORIGINAL CAP FITS · FOR WINTER USE · EXTRA LOAD CAPACITY	8,5x20	**4 104 kr**
		9x20*	**4 104 kr**
		9,5x20*	**4 104 kr**
11	**Nitro Demon**	8x18	**2 784 kr**
	* Forsterket 950 kg	8x19	**3 376 kr**
	Sluttselges	9x19*	**3 376 kr**
	DIRECT HUB FITMENT · ORIGINAL NUT FITS · ORIGINAL BOLT FITS · ORIGINAL CAP FITS · FOR WINTER USE · EXTRA LOAD CAPACITY	8,5x20	**3 808 kr**
		9x20*	**3 808 kr**
		9,5x20*	**3 808 kr**

Nr	Felgmodell	Dim.	Veil. pris eks. MVA
12	**Nitro Edge M.Blk**	9x19	**3 884 kr**
	Forsterket 950 kg	9x20	**4 220 kr**
	DIRECT HUB FITMENT · ORIGINAL NUT FITS · ORIGINAL BOLT FITS · FOR WINTER USE · EXTRA LOAD CAPACITY	10x20	**4 220 kr**
		9x22	**4 888 kr**
		10x22	**4 888 kr**
15	**Nitro Magnum**	9x20	**4 572 kr**
	Forsterket 900 kg	9x22	**5 420 kr**
	DIRECT HUB FITMENT · ORIGINAL NUT FITS · ORIGINAL BOLT FITS · FOR WINTER USE · REAR CONCAVE DESIGN · EXTRA LOAD CAPACITY	10,5x22	**5 420 kr**
16	**Advanti Inizio DST**	7,5x17	**3 324 kr**
	DIRECT HUB FITMENT · ORIGINAL NUT FITS · ORIGINAL BOLT FITS · FOR WINTER USE · LIGHT WEIGHT WHEEL	8x18	**3 828 kr**
		8,5x18	**3 828 kr**
		9x18	**3 828 kr**
		8x19	**4 412 kr**
		8,5x19	**4 412 kr**
		9,5x19	**4 412 kr**
17	**BM Drive M.Gun**	6x15	**1 276 kr**
	Sluttselges	7x16	**1 476 kr**
	DIRECT HUB FITMENT · ORIGINAL NUT FITS · ORIGINAL BOLT FITS · FOR WINTER USE	7x17	**1 736 kr**
		8x17	**1 736 kr**
		8x18	**2 296 kr**
18	**ATS Streetrallye Blk**	7x17	**3 344 kr**
		7,5x18	**4 180 kr**
19	**ATS Streetrallye Slv**	6x15	**1 960 kr**
		6x16	**2 240 kr**
		6,5x16	**2 240 kr**
20	**ATS Antares**	6x15	**1 496 kr**
	DIRECT HUB FITMENT · ORIGINAL BOLT FITS · ORIGINAL CAP FITS · FOR WINTER USE	6,5x16	**1 852 kr**
		7x16	**1 852 kr**
		7,5x16	**1 852 kr**
		7x17	**2 264 kr**
		7,5x17	**2 264 kr**
		8x18	**3 056 kr**
21	**ATS Antares G.Blk**	6x15	**1 568 kr**
	DIRECT HUB FITMENT · ORIGINAL BOLT FITS · ORIGINAL CAP FITS · FOR WINTER USE	6,5x16	**1 896 kr**
		7x16	**1 896 kr**
		7,5x16	**1 896 kr**
		7x17	**2 380 kr**
		7,5x17	**2 380 kr**
		8x18	**3 136 kr**

Nr	Felgmodell	Dim.	Veil. pris eks. MVA
22	**ATS Evolution**	7x16	**1 808 kr**
	DIRECT HUB FITMENT · ORIGINAL BOLT FITS · ORIGINAL CAP FITS · FOR WINTER USE	7,5x17	**2 268 kr**
		8x17	**2 268 kr**
		7x18	**3 016 kr**
		7,5x18	**3 016 kr**
		8x18	**3 016 kr**
		8x19	**3 892 kr**
		9x19	**4 232 kr**
23	**ATS Evolution G.Grey**	7x16	**1 884 kr**
	DIRECT HUB FITMENT · ORIGINAL BOLT FITS · ORIGINAL CAP FITS · FOR WINTER USE	7,5x17	**2 340 kr**
		8x17	**2 340 kr**
		7x18	**3 116 kr**
		7,5x18	**3 116 kr**
		8x18	**3 116 kr**
		8x19	**4 008 kr**
		9x19	**4 348 kr**
24	**ATS Mizar**	6,5x16	**1 812 kr**
	DIRECT HUB FITMENT · ORIGINAL BOLT FITS · ORIGINAL CAP FITS · FOR WINTER USE	7,5x16	**1 812 kr**
		6,5x17	**2 268 kr**
		7x17	**2 268 kr**
		7,5x17	**2 268 kr**
		8x17	**2 268 kr**
		8x18	**3 016 kr**
		8,5x18	**3 016 kr**
		8x19	**3 720 kr**
		8,5x19	**4 176 kr**
		8,5x20	**5 948 kr**
		9x21	**8 276 kr**
		10x21	**9 016 kr**
25	**ATS Mizar G.Blk**	6,5x16	**1 880 kr**
	DIRECT HUB FITMENT · ORIGINAL BOLT FITS · ORIGINAL CAP FITS · FOR WINTER USE	7,5x16	**1 880 kr**
		6,5x17	**2 340 kr**
		7x17	**2 340 kr**
		7,5x17	**2 340 kr**
		8x17	**2 340 kr**
		8x18	**3 116 kr**
		8,5x18	**3 116 kr**
		8x19	**3 868 kr**
		8,5x19	**4 116 kr**
		8,5x20	**6 020 kr**
		9x21	**8 352 kr**
		10x21	**9 156 kr**

Nr	Felgmodell	Dim.	Veil. pris eks. MVA
26	**CSP 18 G.Blk/Pol**	6,5x16	**1 896 kr**
	DIRECT HUB FITMENT · ORIGINAL BOLT FITS · ORIGINAL CAP FITS · FOR WINTER USE · REAR CONCAVE DESIGN	7,5x17	**2 272 kr**
		8x17	**2 272 kr**
		8x18	**2 956 kr**
		8x19	**3 596 kr**
		9x19	**3 596 kr**
27	**CSP 18**	6,5x16	**1 760 kr**
	DIRECT HUB FITMENT · ORIGINAL BOLT FITS · ORIGINAL CAP FITS · FOR WINTER USE · REAR CONCAVE DESIGN	7,5x17	**2 200 kr**
		8x17	**2 200 kr**
		8x18	**2 972 kr**
		8x19	**3 444 kr**
		9x19	**3 444 kr**
28	**CSP 18 G.Blk**	6,5x16	**1 760 kr**
	DIRECT HUB FITMENT · ORIGINAL BOLT FITS · ORIGINAL CAP FITS · FOR WINTER USE · REAR CONCAVE DESIGN	7,5x17	**2 200 kr**
		8x17	**2 200 kr**
		8x18	**2 972 kr**
		8x19	**3 444 kr**
		9x19	**3 444 kr**
29	**CSP 13**	6x15	**1 468 kr**
	DIRECT HUB FITMENT · ORIGINAL BOLT FITS · ORIGINAL CAP FITS · FOR WINTER USE	6,5x16	**1 716 kr**
		7x17	**2 152 kr**
		7,5x18	**2 932 kr**
		8x18	**2 932 kr**
		8x19	**3 404 kr**
30	**CSP 13 M.Gun**	6x15	**1 468 kr**
	DIRECT HUB FITMENT · ORIGINAL BOLT FITS · ORIGINAL CAP FITS · FOR WINTER USE	6,5x16	**1 716 kr**
		7x17	**2 152 kr**
		7,5x18	**2 932 kr**
		8x18	**2 932 kr**
		8x19	**3 404 kr**
32	**CSP 15**	6,5x16	**1 736 kr**
	DIRECT HUB FITMENT · ORIGINAL BOLT FITS · ORIGINAL CAP FITS · FOR WINTER USE	7x17	**2 132 kr**
33	**CSP 15 M.Blk**	6,5x16	**1 736 kr**
	DIRECT HUB FITMENT · ORIGINAL BOLT FITS · ORIGINAL CAP FITS · FOR WINTER USE	7x17	**2 132 kr**
34	**CSP 16**	5x14	**1 176 kr**
	DIRECT HUB FITMENT · ORIGINAL BOLT FITS · ORIGINAL CAP FITS · FOR WINTER USE	5,5x15	**1 228 kr**
		6x15	**1 228 kr**
		6,5x16	**1 468 kr**
		7x16	**1 468 kr**
		7x17	**1 836 kr**
		7,5x17	**1 836 kr**
		7,5x18	**2 444 kr**

Nr	Felgmodell	Dim.	Veil. pris eks. MVA
35	**CSP 16 M.Gun**	5x14	**1 176 kr**
	DIRECT HUB FITMENT · ORIGINAL BOLT FITS · ORIGINAL CAP FITS · FOR WINTER USE	5,5x15	**1 228 kr**
		6x15	**1 228 kr**
		6,5x16	**1 468 kr**
		7x16	**1 468 kr**
		7x17	**1 836 kr**
		7,5x17	**1 836 kr**
		7,5x18	**2 444 kr**
36	**Image Colt**	6,5x16	**1 624 kr**
	DIRECT HUB FITMENT · ORIGINAL BOLT FITS · ORIGINAL CAP FITS · FOR WINTER USE	7,5x17	**1 956 kr**
		8x18	**2 412 kr**
		8,5x19	**3 028 kr**
		8,5x20	**3 432 kr**
37	**Image Comet**	5x14	**1 264 kr**
	DIRECT HUB FITMENT · ORIGINAL NUT FITS · ORIGINAL BOLT FITS · FOR WINTER USE	5,5x14	**1 264 kr**
		5x15	**1 316 kr**
		6x15	**1 316 kr**
		6x16	**1 536 kr**
38	**Image Comet Slv**	5,5x14	**1 264 kr**
	DIRECT HUB FITMENT · ORIGINAL NUT FITS · ORIGINAL BOLT FITS · FOR WINTER USE	5x15	**1 316 kr**
		6x15	**1 316 kr**
		6x16	**1 536 kr**
40	**Image Spirit**	6,5x16	**1 264 kr**
	DIRECT HUB FITMENT	7x16	**1 264 kr**
		7x17	**1 476 kr**
		8x17	**1 476 kr**
		8x18	**1 912 kr**
41	**Image Thor**	8x18	**2 412 kr**
	DIRECT HUB FITMENT · ORIGINAL NUT FITS · ORIGINAL BOLT FITS · FOR WINTER USE	8,5x19	**3 048 kr**
42	**Image Brio**	6x15	**1 304 kr**
	FOR WINTER USE	6,5x15	**1 304 kr**
		6,5x16	**1 524 kr**
		7x17	**1 832 kr**
44	**Image Ride HL M.Gun**	5x13	**1 592 kr**
	Forsterket 4-100 750 kg	5,5x14	**1 716 kr**
	Forsterket 5-112 1000 kg	6x15	**2 032 kr**
	DIRECT HUB FITMENT · ORIGINAL NUT FITS · ORIGINAL BOLT FITS · FOR WINTER USE · EXTRA LOAD CAPACITY		
45	**Image Ride**	5x13	**1 336 kr**
	DIRECT HUB FITMENT · ORIGINAL NUT FITS · ORIGINAL BOLT FITS · FOR WINTER USE	5,5x14	**1 392 kr**
		6x15	**1 552 kr**

Nr	Felgmodell	Dim.	Veil. pris eks. MVA
	Image Ride HL	5x13	**1 592 kr**
	Forsterket 4-100 750 kg	5,5x14	**1 716 kr**
	Forsterket 5-112 1000 kg	6x15	**2 032 kr**
	DIRECT HUB FITMENT · ORIGINAL NUT FITS · ORIGINAL BOLT FITS · FOR WINTER USE · EXTRA LOAD CAPACITY		
46	**Image Stella**	6,5x16	**1 548 kr**
	DIRECT HUB FITMENT · ORIGINAL NUT FITS · ORIGINAL BOLT FITS · FOR WINTER USE	7x16	**1 548 kr**
		7x17	**1 812 kr**
		7,5x17	**1 812 kr**
		7,5x18	**2 276 kr**
		8x18	**2 276 kr**
47	**Image Stella M.Blk**	6,5x16	**1 548 kr**
	DIRECT HUB FITMENT · ORIGINAL NUT FITS · ORIGINAL BOLT FITS · FOR WINTER USE	7x16	**1 548 kr**
		7x17	**1 812 kr**
		7,5x17	**1 812 kr**
		7,5x18	**2 276 kr**
		8x18	**2 276 kr**
48	**Image Motion**	6x15	**1 224 kr**
	DIRECT HUB FITMENT · ORIGINAL NUT FITS · ORIGINAL BOLT FITS · ORIGINAL CAP FITS · FOR WINTER USE	6,5x16	**1 468 kr**
		7x16	**1 468 kr**
		7x17	**1 736 kr**
		8x17	**1 736 kr**
		8x18	**2 204 kr**
		8x19	**2 532 kr**
49	**Image Motion G.Gun**	6x15	**1 224 kr**
	DIRECT HUB FITMENT · ORIGINAL NUT FITS · ORIGINAL BOLT FITS · ORIGINAL CAP FITS · FOR WINTER USE	6,5x16	**1 468 kr**
		7x16	**1 468 kr**
		7x17	**1 736 kr**
		8x17	**1 736 kr**
		8x18	**2 204 kr**
		8x19	**2 532 kr**
50	**Image Legend**	6,5x16	**1 544 kr**
	DIRECT HUB FITMENT · ORIGINAL NUT FITS · ORIGINAL BOLT FITS · FOR WINTER USE	7x16	**1 544 kr**
		7,5x17	**1 812 kr**
		8x18	**2 276 kr**
51	**Image Rebel**	4,5x14	**1 392 kr**
	FOR WINTER USE	5x15	**1 660 kr**
52	**Image Rebel M.Blk**	4,5x14	**1 392 kr**
	FOR WINTER USE	5x15	**1 660 kr**
53	**Nitro Hammer**	8x18	**3 256 kr**
	Forsterket 880 kg	8,5x20	**4 268 kr**
	DIRECT HUB FITMENT · ORIGINAL NUT FITS · ORIGINAL BOLT FITS · FOR WINTER USE · EXTRA LOAD CAPACITY		

Nr	Felgmodell	Dim.	Veil. pris eks. MVA
53	**Nitro Hammer HL**	8x18	**3 508 kr**
	Forsterket 1000 kg	8,5x20	**4 468 kr**
	DIRECT HUB FITMENT · ORIGINAL NUT FITS · ORIGINAL BOLT FITS · FOR WINTER USE · EXTRA LOAD CAPACITY		
54	**Image Vector**	6,5x16	**1 956 kr**
	Forsterket 900 kg	7x17	**2 576 kr**
	DIRECT HUB FITMENT · ORIGINAL NUT FITS · ORIGINAL BOLT FITS · FOR WINTER USE		
55	**Image Vector Slv**	6,5x16	**1 956 kr**
	Forsterket 900 kg	7x17	**2 576 kr**
	DIRECT HUB FITMENT · ORIGINAL NUT FITS · ORIGINAL BOLT FITS · FOR WINTER USE		
58	**Image Strong**	6x15*	**2 116 kr**
	*Forsterket 1200 kg	6,5x16**	**2 500 kr**
	**Forsterket 1400 kg	6,5x17**	**2 884 kr**
	DIRECT HUB FITMENT · FOR WINTER USE · EXTRA LOAD CAPACITY	7,5x18**	**3 524 kr**
59	**Image Strong M.Gun**	6x15*	**2 116 kr**
	*Forsterket 1200 kg	6,5x16**	**2 500 kr**
	**Forsterket 1400 kg	6,5x17**	**2 884 kr**
	DIRECT HUB FITMENT · FOR WINTER USE · EXTRA LOAD CAPACITY	7,5x18**	**3 524 kr**
61	**Image Solid**	6,5x16	**2 552 kr**
	Forsterket 1400 kg		
	DIRECT HUB FITMENT · EXTRA LOAD CAPACITY		
65	**CSP Work**	6x15	**2 196 kr**
	Forsterket 955 kg	7x16	**2 556 kr**
	DIRECT HUB FITMENT · FOR WINTER USE · EXTRA LOAD CAPACITY		
67	**Image Rock**	7,5x17	**2 796 kr**
	Forsterket 955 kg	7,5x18	**3 324 kr**
	DIRECT HUB FITMENT · ORIGINAL CAP FITS · FOR WINTER USE · EXTRA LOAD CAPACITY		
68	**BM Macho**	7x16	**2 396 kr**
	Forsterket 955 kg	7,5x17	**2 756 kr**
	DIRECT HUB FITMENT · ORIGINAL NUT FITS · ORIGINAL BOLT FITS · FOR WINTER USE · EXTRA LOAD CAPACITY	8x18	**3 300 kr**
		9x20	**4 288 kr**
69	**BM Macho M.Blk**	7x16	**2 396 kr**
	Forsterket 955 kg	7,5x17	**2 756 kr**
	DIRECT HUB FITMENT · ORIGINAL NUT FITS · ORIGINAL BOLT FITS · FOR WINTER USE · EXTRA LOAD CAPACITY	8x18	**3 300 kr**
		9x20	**4 288 kr**
72	**Ballistic Dakota**	9x20	**4 624 kr**
	Forsterket 955 kg	9x22	**5 128 kr**
	FOR WINTER USE · EXTRA LOAD CAPACITY		

Nr	Felgmodell	Dim.	Veil. pris eks. MVA
74	**Ballistic Morax**	9x17	**4 020 kr**
	Forsterket 955 kg	9x18	**4 276 kr**
	FOR WINTER USE	9x20	**4 740 kr**
76	**CSP 10**	5x19	**2 812 kr**
	DIRECT HUB FITMENT, ORIGINAL BOLT FITS, ORIGINAL CAP FITS, FOR WINTER USE		
77	**CSP 10 M.Blk**	5x19	**2 812 kr**
	DIRECT HUB FITMENT, ORIGINAL BOLT FITS, ORIGINAL CAP FITS, FOR WINTER USE		
78	**Advanti Peak**	8x16	**2 692 kr**
	FOR WINTER USE		
92	**Image Colt L.Gun**	6,5x16	**1 548 kr**
	DIRECT HUB FITMENT, ORIGINAL NUT FITS, ORIGINAL BOLT FITS, FOR WINTER USE	7,5x17	**1 876 kr**
		8x18	**2 296 kr**
		8,5x19	**2 876 kr**
		8,5x20	**3 276 kr**
93	**Image Star FF L.Gun**	6,5x17	**2 216 kr**
	DIRECT HUB FITMENT, ORIGINAL NUT FITS, ORIGINAL BOLT FITS, ORIGINAL CAP FITS, FOR WINTER USE	7x17	**2 216 kr**
		7,5x17	**2 216 kr**
		7,5x18	**2 936 kr**
		8x18	**2 936 kr**
		8,5x18	**2 936 kr**
		9x18	**2 936 kr**
94	**Image Star FF Slv**	7,5x18	**2 936 kr**
	DIRECT HUB FITMENT, ORIGINAL NUT FITS, ORIGINAL BOLT FITS, ORIGINAL CAP FITS, FOR WINTER USE	8x18	**2 936 kr**
		8,5x18	**2 936 kr**
		9x18	**2 936 kr**
95	**Image Star FF G.Blk/Pol**	6,5x17	**2 336 kr**
	DIRECT HUB FITMENT, ORIGINAL NUT FITS, ORIGINAL BOLT FITS, ORIGINAL CAP FITS, FOR WINTER USE	7x17	**2 336 kr**
		7,5x17	**2 336 kr**
		7,5x18	**3 076 kr**
		8x18	**3 076 kr**
		8,5x18	**3 076 kr**
		9x18	**3 076 kr**
96	**Image Colt SUV G.Blk/Pol**	8,5x19	**3 492 kr**
	DIRECT HUB FITMENT, ORIGINAL NUT FITS, ORIGINAL BOLT FITS, FOR WINTER USE, EXTRA LOAD CAPACITY	9x20	**4 124 kr**
97	**Image Colt SUV L.Gun**	8,5x19	**3 396 kr**
	DIRECT HUB FITMENT, ORIGINAL NUT FITS, ORIGINAL BOLT FITS, FOR WINTER USE, EXTRA LOAD CAPACITY	9x20	**4 008 kr**

Nr	Felgmodell	Dim.	Veil. pris eks. MVA
230	**Breyton BR-I HL Slv**	9x20	**3 544 kr**
	Bestillingssortiment	9,5x21	**4 220 kr**
	DIRECT HUB FITMENT, ORIGINAL BOLT FITS, ORIGINAL CAP FITS, FOR WINTER USE, EXTRA LOAD CAPACITY		**2 196 kr**
230	**Breyton BR-I Slv**	7x17	**2 348 kr**
	Bestillingssortiment	7,5x17	**2 348 kr**
	DIRECT HUB FITMENT, ORIGINAL BOLT FITS, ORIGINAL CAP FITS, FOR WINTER USE	7x18	**2 896 kr**
		7,5x18	**2 896 kr**
		7,5x19	**2 896 kr**
		8x19	**2 896 kr**
		8,5x19	**3 224 kr**
		9x19	**3 224 kr**
		8x20	**3 224 kr**
		8,5x20	**3 224 kr**
		9x20	**3 224:-**
		9,5x20	**3 224:-**
231	**Breyton BR-I HL M.Blk**	9x20	**3 544 kr**
	Bestillingssortiment	9,5x21	**4 220 kr**
	DIRECT HUB FITMENT, ORIGINAL BOLT FITS, ORIGINAL CAP FITS, FOR WINTER USE, EXTRA LOAD CAPACITY		
231	**Breyton BR-I M.Blk**	7x17	**2 196 kr**
	Bestillingssortiment	7,5x17	**2 348 kr**
	DIRECT HUB FITMENT, ORIGINAL BOLT FITS, ORIGINAL CAP FITS, FOR WINTER USE	7x18	**2 348 kr**
		7,5x18	**2 896 kr**
		7,5x19	**2 896 kr**
		8x19	**2 896 kr**
		8,5x19	**2 896 kr**
		9x19	**3 224 kr**
		8x20	**3 224 kr**
		8,5x20	**3 224 kr**
		9x20	**3 224 kr**
		9,5x20	**3 224 kr**



1. Nitro Throne FF



2. Nitro Sapphire FF



3. Nitro Turismo FF



4. Nitro Turismo FF G.Gun/Pol



5. Nitro Volcano G.Gun



6. Nitro Volcano



7. Nitro Spark G.Blk/Grey



8. Nitro Spark G.Blk/Red



9. Nitro Sabre G.Blk



10. Nitro Demon H.Slv



11. Nitro Demon



12. Nitro Edge M.Blk



15. Nitro Magnum



16. Advanti Inizio DST



17. BM Drive M.Gun



18. ATS Streetrallye Blk



19. ATS Streetrallye Slv



20. ATS Antares



21. ATS Antares G.Blk



22. ATS Evolution



23. ATS Evolution G.Grey



24. ATS Mizar



25. ATS Mizar G.Blk



26. CSP 18 G.Blk/Pol



27. CSP 18



28. CSP 18 G.Blk



29. CSP 13



30. CSP 13 M.Gun



32. CSP 15



33. CSP 15 M.Blk



34. CSP 16



35. CSP 16 M.Gun



36. Image Colt



37. Image Comet



38. Image Comet Slv



40. Image Spirit



41. Image Thor



42. Image Brio



44. Image Ride HL M.Gun



45. Image Ride



46. Image Stella



47. Image Stella M.Blk



48. Image Motion



49. Image Motion G.Gun



50. Image Legend



51. Image Rebel



52. Image Rebel M.Blk



53. Nitro Hammer



54. Image Vector



55. Image Vector Slv



58. Image Strong



59. Image Strong M.Gun



61. Image Solid



65. CSP Work



67. Image Rock



68. BM Macho



69. BM Macho M.Blk



72. Ballistic Dakota



74. Ballistic Morax



76. CSP 10



77. CSP 10 M.Blk



78. Advanti Peak



92. Image Colt L.Gun



93. Image Star FF L.Gun



94. Image Star FF Slv



95. Image Star FF G.Blk/Pol



96. Image Colt SUV G.Blk/Pol



97. Image Colt SUV L.Gun



230. Breyton BR-I Slv



231. Breyton BR-I M.Blk

SpecialWheels

Spesialfelger AS
Nygårdsveien 51
1400 SKI
Tlf. 67 79 21 00
info@spesialfelger.no